HITACHI INVERTER

NE-S1 SERIES

Quick Reference Guide

Read through this Quick Reference Guide, and keep it handy for future reference.

NT3411EX

HITACHI

Introduction

Introduction

Thank you for purchasing the Hitachi NE-S1 Series Inverter.
This Quick Reference Guide describes how to handle and maintain the Hitachi NE-S1 Series Inverter.
Read this Quick Reference Guide carefully before using the inverter, and then keep it handy for those who operate, maintain, and inspect the inverter.
Before and during the installation, operation, inspection, and maintenance of the inverter, always refer to this Quick Reference Guide to obtain the necessary related knowledge, and ensure you understand and follow all safety information, precautions, and operating and handling instructions for the correct use of the inverter.
Always use the inverter strictly within the range of the specifications described in this Quick Reference Guide and correctly implement maintenance and inspections to prevent faults occurring.
When using the inverter together with optional products, also read the manuals for those products. Note that this Quick Reference Guide and the manual for each optional product to be used should be delivered to the end user of the inverter.

Handling of this Quick Reference Guide

- The contents of this Quick Reference Guide are subject to change without prior notice.
- Even if you lose this Quick Reference Guide, it will not be resupplied, so please keep it carefully.
- No part of this Quick Reference Guide may be reproduced in any form without the publisher's permission.
- If you find any incorrect description, missing description or have a question concerning the contents of this Quick Reference Guide, please contact the publisher.
- Read Quick Reference Guide carefully before starting the maintenance and service. (Quick Reference Guide can be downloaded from our website (Hitachi Industrial Equipment Systems Co., Ltd.) or please contact Hitachi distributor.)

Revision History

No.	Revision content	Date of issue	Manual code
1	First edition	July,2012	NT3411X
2	Addition 400VClass.	May,2013	NT3411AX
3	Addition FFM option.	May,2013	NT3411BX
4	Addition China ver. And Europe Ver.	Aug.2013	NT3411CX
5	Addition 040H	Sep.2013	NT3411DX
6	Addition PM control mode	Mar.2021	NT3411EX

- The current edition of this Quick Reference Guide also includes some corrections of simple misprints, missing letters, misdescriptions and certain added explanations other than those listed in the above Revision History table.

Contents

Chapter 1 Safety Instructions

1.1 Safety Instructions ..... 1 - 3
1.2 Precautions Concerning Electromagnetic Compatibility (EMC) ..... 1 - 7
1.3 Precautions Concerning Compliance with UL and cUL Standards ..... 1 - 11

Chapter 2 Inspection of the Purchased Product

2.1 Inspection of the Purchased Product ..... 2 - 3
2.2 Method of Inquiry and Product Warranty ..... 2 - 4

Chapter 3 Exterior Views

3.1 Exterior Views and Names of Parts ..... 3 - 3
3.2 Name of each portion (removing the front cover) ..... 3 - 4

Chapter 4 Installation

4.1 Precautions for installation ..... 4 - 3

Chapter 5 Wiring

5.1 Precautions for Wiring ..... 5 - 3
5.2 How to attach and remove the front cover ..... 5 - 4
5.3 How to attach the Dedicated operator (NES1-OP) ..... 5 - 5
5.4 Wiring and terminal description ..... 5 - 6
5.5 Mains wiring ..... 5 - 9
5.6 Wiring of the control circuit ..... 5 - 14
5.7 Connection with the programmable controller (PLC) ..... 5 - 16
5.8 Notes on using multiple inverters ..... 5 - 17

Chapter 6 Operation

6.1 Precautions of Operation ..... 6 - 3
6.2 Confirmation before power up the inverter ..... 6 - 4
6.3 Changing parameters ..... 6 - 4
6.4 Power up the inverter ..... 6 - 5
6.5 How To Operate the Inverter ..... 6 - 6
6.6 Motor Operation ..... 6 - 12
6.7 Test Run with the motor ..... 6 - 17
6.8 When tripping occurs ..... 6 - 19

Contents

Chapter 7 Explanation of Functions

7.1 Monitoring the data ····· 7 - 3
7.1.1 Output frequency monitoring (d001) ····· 7 - 3
7.1.2 Output current monitoring (d002) ····· 7 - 3
7.1.3 Rotation direction monitoring (d003) ····· 7 - 3
7.1.4 PV (Process variable) monitoring (d004,A071,A075) ····· 7 - 4
7.1.5 Intelligent input terminal status (d005) ····· 7 - 4
7.1.6 Intelligent output terminal status (d006) ····· 7 - 4
7.1.7 Scaled output frequency monitoring (d007,b086) ····· 7 - 5
7.1.8 Output voltage monitoring (d013) ····· 7 - 5
7.1.9 Input power monitoring (d014) ····· 7 - 5
7.1.10 Cumulative power monitoring (d015,b078,b079) ····· 7 - 6
7.1.11 Cumulative operation RUN time monitoring (d016) ····· 7 - 6
7.1.12 Cumulative power-on time monitoring (d017) ····· 7 - 6
7.1.13 Heatsink temperature monitoring (d018) ····· 7 - 6
7.1.14 Current time monitoring (d031) ····· 7 - 6
7.1.15 Dual monitoring (d050,b160,b161) ····· 7 - 7
7.1.16 Inverter mode monitoring (d060) ····· 7 - 7
7.1.17 Trip Counter (d080) ····· 7 - 7
7.1.18 Trip monitoring 1 to 6 (d081 to d086) ····· 7 - 8
7.1.19 Warning monitoring (d090) ····· 7 - 8
7.1.20 DC bus voltage monitoring (d102) ····· 7 - 8
7.1.21 Electronic thermal overload monitoring (d104) ····· 7 - 8

7.2 Using the basic functions ····· 7 - 9
7.2.1 Frequency source setting and Output frequency setting (F001,A001/A201,A020/A220,A021 to A027,C001 to C005) ····· 7 - 9
7.2.2 Run command source setting (A002/A202,C001 to C005,C011 to C015,F004) ····· 7 - 12
7.2.3 Run key routing (F004) ····· 7 - 12
7.2.4 Rotational direction restriction (b035) ····· 7 - 12
7.2.5 Stop mode selection (b091) ····· 7 - 13
7.2.6 Acceleration/deceleration time setting (F002/F202,F003/F203) ····· 7 - 13
7.2.7 Base frequency setting (A003/A203, A082/A282) ····· 7 - 14
7.2.8 Using the AVR Functions (A081/A281, A082/A282, A083, A084) ····· 7 - 14
7.2.9 Maximum frequency setting (A004/A204) ····· 7 - 16
7.2.10 Carrier frequency setting (b083) ····· 7 - 16

7.3 Setting the intelligent I/O terminal function ····· 7 - 17
7.3.1 Intelligent input terminal setting (C001 to C005) ····· 7 - 17
7.3.2 Intelligent input terminal a/b (NO/NC) selection (C011 to C015) ····· 7 - 17
7.3.3 Intelligent input terminal response time (C160 to C164) ····· 7 - 18
7.3.4 Intelligent output terminal setting (C021,C026) ····· 7 - 18
7.3.5 Intelligent output terminal a/b (NO/NC) selection (C031,C036) ····· 7 - 19
7.3.6 Output signal delay/hold function (C130,C131,C140,C141) ····· 7 - 20

7.4 Using the analog terminal ..... 7 - 21
7.4.1 Analog input (O/OI) ..... 7 - 21
7.4.2 Analog input (O/OI) filter setting (A016) ..... 7 - 21
7.4.3 Analog command holding function (AHD) (C001 to C005,C101) ..... 7 - 22
7.4.4 Analog Input Adjustment (C081) ..... 7 - 22
7.4.5 Start/end frequency setting for external analog input (A011 to A015,A161 to A165) ..... 7 - 23
7.4.6 FM terminal (C027,C030,C105) ..... 7 - 24

7.5 To drive the motor ..... 7 - 25
7.5.1 V/f characteristic curve selection (A044/A244,b100 to b113) ..... 7 - 25
7.5.2 Torque boost setting (A041/A241,A042/A242,A043/A243, A046/A246,A047/A247,H003/H203,H004/H204) ..... 7 - 27
7.5.3 3-wire input function (STA, STP, and F/R) (C001 to C005) ..... 7 - 28
7.5.4 Start frequency setting (b082) ..... 7 - 29
7.5.5 Reduced voltage start function (b036,b082) ..... 7 - 29
7.5.6 Jogging (JG) command setting (A038,A039,C001 to C005) ..... 7 - 30
7.5.7 Frequency limit setting (A061/A261,A062/A262) ..... 7 - 31
7.5.8 Jump frequency function (A063 to A068) ..... 7 - 31
7.5.9 Acceleration/Deceleration hold frequency setting (A069,A070,A154,A155) ..... 7 - 32
7.5.10 Permission of Run command function (ROK) (C001 to C005) ..... 7 - 32
7.5.11 Multi-speed select setting (CF1 to CF3 and SF1 to SF3) (A019,A020/A220,A021 to A027,C001 to C005,C169) ..... 7 - 33
7.5.12 Two-stage acceleration/deceleration function (2CH) (A092/A292 to A096/A296) ..... 7 - 35
7.5.13 Acceleration/deceleration curve selection (A097,A098,A131,A132) ..... 7 - 36
7.5.14 Frequency calculation function (A141 to A143,A001/A201,A076) ..... 7 - 37
7.5.15 Frequency addition function (A145,A146,C001 to C005) ..... 7 - 38
7.5.16 Remote control function (UP and DWN) (C101,C104,C001 to C005) ..... 7 - 38
7.5.17 V/f gain setting (A045/A245,A082/A282) ..... 7 - 39
7.5.18 PID function (A071 to A078,A156 to A158,C044,C052,C053) ..... 7 - 40
7.5.19 Energy-saving operation (A085,A086) ..... 7 - 44
7.5.20 Stabilization constant setting (H006/H206,A045/A245,b083) ..... 7 - 44
7.5.21 2nd motor control function (SET) (C001 to C005) ..... 7 - 45
7.5.22 DC braking (DB) function (A051 to A059,C001 to C005) ..... 7 - 46
7.5.23 Motor capacity and poles setting (H003/H203,H004/H204) ..... 7 - 49

7.6 Functions related to the operator display ..... 7 - 50
7.6.1 STOP/RESET key enable (b087,A002/A202) ..... 7 - 50
7.6.2 Software lock (SFT) function (b031,b166,C001 to C005) ..... 7 - 50
7.6.3 Forcible-operation from the operator (OPE) function (C001 to C005) ..... 7 - 51
7.6.4 Forcible-operation from terminal (F-TM) function (C001 to C005) ..... 7 - 51
7.6.5 Action selection in case of external operator disconnection (b165) ..... 7 - 51
7.6.6 Initial display selection (selection of the initial display after power-on) (b038) ..... 7 - 52
7.6.7 Select automatic return to the initial display (b164,b038) ..... 7 - 52
7.6.8 NES1-OP display selection (b150) ..... 7 - 52
7.6.9 Data Read/Write selection (b166) ..... 7 - 52
7.6.10 Display limitation function (DISP) (C001 to C005,b038) ..... 7 - 52
7.6.11 Function code display restriction (b037) ..... 7 - 53
7.6.12 Button sensitivity selection (C151) ..... 7 - 54
7.6.13 Scroll sensitivity selection (C152) ..... 7 - 54

Contents

7.7 Functions about restarting ····· 7 - 55
7.7.1 Retry (UnderVoltage, OverCurrent, OverVoltage) (b001 to b005,b007,b008,b010,b011,b028 to b030) ····· 7 - 55
7.7.2 Reset (RS) function (b003,b007,C102,C103,C001 to C005) ····· 7 - 60
7.7.3 Free-run stop (FRS) function (b003,b007,b028 to b030,b088,C001 to C005) ····· 7 - 62
7.7.4 Unattended start protection (USP) function (C001 to C005) ····· 7 - 63
7.7.5 Deceleration and stopping at power failure (nonstop deceleration at instantaneous power failure) (b050 to b054,b133,b134) ····· 7 - 64

7.8 Set functions related to protection and warning, each output signal ····· 7 - 66
7.8.1 Alarm signal (AL) ····· 7 - 66
7.8.2 Electronic thermal protection (b012/b212,b013/b213,b015 to b020,C061) ····· 7 - 67
7.8.3 Overload restriction/overload notice (b021 to b026,b221 to b223,C040,C041/C241) ····· 7 - 69
7.8.4 Overcurrent restraint (b027) ····· 7 - 70
7.8.5 Overvoltage suppression during deceleration (b130 to b134) ····· 7 - 71
7.8.6 External trip (EXT) function (C001 to C005) ····· 7 - 72
7.8.7 Automatic carrier frequency reduction (b083,b089) ····· 7 - 73
7.8.8 Running signal (RUN) (C021,C026) ····· 7 - 74
7.8.9 Frequency arrival signals (FA1, FA2, FA3) (C021,C026,C042,C043) ····· 7 - 74
7.8.10 Running time over and power-on time over signals (RNT,ONT) (b034,C021,C026) ····· 7 - 76
7.8.11 0Hz speed detection signal (ZS) (C063,C021,C026) ····· 7 - 76
7.8.12 Logic output signal operation function (LOG) (C142,C143,C144,C021,C026) ····· 7 - 77
7.8.13 Network Disconnect Detection signal (NDc) (C077,C021,C026) ····· 7 - 78
7.8.14 Starting contact signal (FR) (C021,C026) ····· 7 - 78
7.8.15 Heatsink overheat warning signal (OHF) (C064,C021,C026) ····· 7 - 78
7.8.16 Low current detection (LOC) signal (C038,C039,C021,C026) ····· 7 - 79
7.8.17 Inverter ready signal (IRDY) (C021,C026) ····· 7 - 79
7.8.18 Forward rotation signal (FWR) (C021,C026) ····· 7 - 79
7.8.19 Reverse rotation signal (RVR) (C021,C026) ····· 7 - 80
7.8.20 Major failure signal (MJA) (C021,C026) ····· 7 - 80
7.8.21 Window comparator (WC) (detection of terminal disconnection: Dc) (b060 to b062,b070,C021,C026) ····· 7 - 81
7.8.22 Frequency command source signal (FREF) ····· 7 - 82
7.8.23 RUN command source signal (REF) ····· 7 - 82
7.8.24 2nd Motor in operation (SETM) ····· 7 - 82
7.8.25 Ground fault detection (C155) ····· 7 - 82
7.8.26 Out phase loss detection (C157) ····· 7 - 82

7.9 Initializing ····· 7 - 83
7.9.1 Initialization setting (b084,b085,b094,b180) ····· 7 - 83

7.10 PM Motor Drive ····· 7 - 84
7.10.1 Limitation ····· 7 - 84
7.10.2 Invalid functions ····· 7 - 85
7.10.3 PM mode switching (b171,b180) ····· 7 - 86
7.10.4 Motor constants selection (H101 to H114) ····· 7 - 87
7.10.5 PM auto-tuning function (A003,A004,A051,H001,H101 to H114) ····· 7 - 88
7.10.6 PM motor drive (b012,b083,H116 to H119,H121 to H123,H133 to H136,H141,H142) ····· 7 - 92

Chapter 8 Communication Functions

8.1 Communication Specification ····· 8 - 3
8.2 Connecting the Inverter to Modbus ····· 8 - 4
8.3 Modbus setting procedure ····· 8 - 5
8.4 Modbus Communication parameter ····· 8 - 6
8.5 Modbus Protocol Reference ····· 8 - 6
8.6 Explanation of function codes ····· 8 - 10
8.7 Re-calculate the internal variable ····· 8 - 18
8.8 Modbus Data Listing ····· 8 - 19

Chapter 9 Error Codes

9.1 Indication of the error ····· 9 - 3
9.2 Error Codes and Troubleshooting ····· 9 - 5
9.3 Warning Codes for Digital operator ····· 9 - 7
9.4 Other Display for Digital operator ····· 9 - 8

Chapter 10 Troubleshooting

Troubleshooting tips ····· 10 - 3

Chapter 11 Maintenance and Inspection

11.1 Precautions for Maintenance and Inspection ····· 11 - 3
11.2 Daily and Periodic Inspections ····· 11 - 4
11.3 Ground Resistance Test with a Megger ····· 11 - 5
11.4 Withstand Voltage Test ····· 11 - 5
11.5 Methods of Measuring the Input/Output Voltages, Current, and Power ····· 11 - 6
11.6 Capacitor Life Curves ····· 11 - 7

Chapter 12 Specifications

12.1 Specifications ····· 12- 3
12.2 Dimensions ····· 12- 5
12.3 Derating Curves ····· 12- 7

Contents

Chapter 13 Option

13.1 Operator ····· 13 - 3
13.1.1 Attention at the data setting ····· 13 - 3
13.1.2 Monitoring mode (Display of NES1-OP, OPE-S/SR/SBK/SRmini, SOP, SOP-VR) ····· 13 - 3
13.1.3 Function mode (Display of NES1-OP, OPE-S/SR/SBK/SRmini, SOP, SOP-VR) ····· 13 - 5
13.1.4 Monitoring mode (Display of WOP) ····· 13 - 25
13.1.5 Function mode (Display of WOP) ····· 13 - 27
13.1.6 Input/Output function summary table ····· 13 - 50

13.2 Top cover for exclusive use of NE-S1 series: NES1-FFM-M ····· 13 - 54
13.2.1 Mounting method ····· 13 - 54
13.2.2 Improvement of the derating ····· 13 - 55
13.2.3 Capacitor life improvement ····· 13 - 55
13.2.4 Reduction of the dust invades ····· 13 - 56
13.2.5 Reduction of the inverter installation area ····· 13 - 57

Appendix

Appendix-A Disassembly method of NES1-OP ····· Appendix - 3

Index

Index ····· Index - 1

Chapter 1 Safety Instructions

This chapter describes the Safety instructions.

1.1 Safety Instructions ····· 1 - 3

1.2 Precautions Concerning Electromagnetic Compatibility (EMC) ····· 1 - 7

1.3 Precautions Concerning Compliance with UL and cUL Standards ····· 1 - 11

(Memo)

1.1 Safety Instructions

Be sure to read this Quick Reference Guide and appended documents thoroughly before installing, operating, maintaining, or inspecting the inverter.
In this Quick Reference Guide, safety instructions are classified into two levels, namely WARNING and CAUTION.

⚠ WARNING : Indicates that incorrect handling may cause hazardous situations, which may result in serious personal injury or death.

⚠ CAUTION : Indicates that incorrect handling may cause hazardous situations, which may result in moderate or slight personal injury or physical damage alone.

Note that even a ⚠ CAUTION level situation may lead to a serious consequence according to circumstances. Be sure to follow every safety instruction, which contains important safety information. Also focus on and observe the items and instructions described under "Notes" in the text.

⚠ CAUTION

Many of the drawings in this Quick Reference Guide show the inverter with covers and/or parts blocking your view being removed.

Do not operate the inverter in the status shown in those drawings. If you have removed the covers and/or parts, be sure to reinstall them in their original positions before starting operation, and follow all instructions in this Quick Reference Guide when operating the inverter.

1. Installation

⚠ CAUTION

- Install the inverter on a non-flammable surface, e.g., metal. Otherwise, you run the risk of fire.
- Do not place flammable materials near the installed inverter. Otherwise, you run the risk of fire.
- When carrying the inverter, do not hold its front cover. Otherwise, you run the risk of injury and damage by dropping the inverter.
- Prevent foreign matter (e.g., cut pieces of wire, sputtering welding materials, iron chips, wire, and dust) from entering the inverter. Otherwise, you run the risk of fire.
- Install the inverter on a structure able to bear the weight specified in the Quick Reference Guide. Otherwise, you run the risk of injury due to the inverter falling.
- Install the inverter on a vertical wall that is free of vibrations. Otherwise, you run the risk of injury due to the inverter falling.
- Do not install and operate the inverter if it is damaged or its parts are missing. Otherwise, you run the risk of injury.
- Install the inverter in a well-ventilated indoor site not exposed to direct sunlight. Avoid places where the inverter is exposed to high temperature, high humidity, condensation, dust, explosive gases, corrosive gases, flammable gases, grinding fluid mist, or salt water. Otherwise, you run the risk of fire.
- The inverter is precision equipment. Do not allow it to fall or be subject to high impacts, step on it, or place a heavy load on it. These may cause the inverter to fail.
- When touching the inverter, be aware of the electrostatic charge. It may cause the inverter to fail.

2. Wiring

WARNING

- Be sure to ground the inverter. Otherwise, you run the risk of electric shock or fire.
- Commit wiring work to a qualified electrician. Otherwise, you run the risk of electric shock or fire.
- Before wiring, make sure that the power supply is off. Otherwise, you run the risk of electric shock or fire.
- Perform wiring only after installing the inverter. Otherwise, you run the risk of electric shock or injury.
- The inverter must be powered OFF before you change any of the slide switch settings. Otherwise, you run the risk of electric shock or injury.

CAUTION

- Make sure that the voltage of AC power supply matches the rated voltage of your inverter. Otherwise, you run the risk of injury or fire.
- Do not input single phase AC power supply into the three phases input type inverter. Otherwise, you run the risk of fire.
- Do not connect AC power supply to any of the output terminals (U(T1), V(T2), and W(T3)) and the ground terminal. Otherwise, you run the risk of injury or fire.
- NE-S1 series inverter does not have terminals for braking resistor. Do not connect the resistor. Otherwise, there is a risk of fire.
- Connect an earth-leakage breaker to the power input circuit. Otherwise, you run the risk of fire.
- Use only the power cables, earth-leakage breaker, and magnetic contactors that have the specified capacity (ratings). Otherwise, you run the risk of fire.
- Do not use the magnetic contactor installed on the primary and secondary sides of the inverter to stop its operation.
- Tighten each screw to the specified torque. No screws must be left loose. Otherwise, you run the risk of fire.
- Please make sure that earth or ground screw is tighten properly and completely.
- First, check the screws of output terminal (U(T1), V(T2), and W(T3)) are properly tighten, and then tighten the screws of input terminal (R(L1),S(L2) and T(L3)).
- The factory default value of the intelligent relay output terminals [AL1, AL2-AL0] setting (C036) is the b-contact (NC) setting between AL1 and AL0. Also, even if it is initialized, it returns to the b-contact (NC) setting. When using this inverter as a substitute for an old model or when using it as a built-in system, check the intelligent relay output terminals [AL1, AL2-AL0] setting (C036), and use it according to the peripheral circuit logic.
  There is a risk of system down due to contact logic mismatch.

3. Operation

WARNING

- While power is supplied to the inverter, do not touch any terminal or internal part of the inverter, check signals, or connect or disconnect any wire or connector. Otherwise, you run the risk of electric shock or fire.
- Be sure to close the front cover before turning on the inverter power. Do not open the front cover while power is being supplied to the inverter or voltage remains inside. Otherwise, you run the risk of electric shock.
- Do not operate switches with wet hands. Otherwise, you run the risk of electric shock.
- While power is supplied to the inverter, do not touch the terminal of the inverter, even if it has stopped. Otherwise, you run the risk of injury or fire.
- If the retry mode has been selected, the inverter will restart suddenly after a break in the tripping status. Stay away from the machine controlled by the inverter when the inverter is under such circumstances. (Design the machine so that human safety can be ensured, even when the inverter restarts suddenly.) Otherwise, you run the risk of injury.
- Do not select the retry mode for controlling an elevating or traveling device because output free-running status occurs in retry mode. Otherwise, you run the risk of injury or damage to the machine controlled by the inverter.
- If an operation command has been input to the inverter before a short-term power failure, the inverter may restart operation after the power recovery. If such a restart may put persons in danger, design a control circuit that disables the inverter from restarting after power recovery. Otherwise, you run the risk of injury.
- Prepare the additional emergency stop switch in addition to the stop key of the dedicated operator and the remote operator. Otherwise, there is a danger of injury.
- If an operation command has been input to the inverter before the inverter enters alarm status, the inverter will restart suddenly when the alarm status is reset. Before resetting the alarm status, make sure that no operation command has been input.
- While power is supplied to the inverter, do not touch any internal part of the inverter, or insert a bar in it. Otherwise, you run the risk of electric shock or fire.
- Run/Stop/Reset are integrated in one key on the standard panel. Therefore, before you press the key, please make sure of the operating status of the inverter.
  Otherwise, you run the risk of injury or damage to the machine controlled by the inverter.

CAUTION

- Do not touch the heatsink, which heats up during the inverter operation. Otherwise, you run the risk of burn injury.
- The inverter allows you to easily control the speed of motor or machine operations. Before operating the inverter, confirm the capacity and ratings of the motor or machine controlled by the inverter. Otherwise, you run the risk of injury.
- Install an external brake system if needed. Otherwise, you run the risk of injury.
- When using the inverter to operate a standard motor at a frequency of over 60 Hz, check the allowable motor speeds with the manufacturers of the motor and the machine to be driven and obtain their consent before starting inverter operation. Otherwise, you run the risk of damage to the motor and machine.
- During inverter operation, check the motor for the direction of rotation, abnormal sound, and vibrations. Otherwise, you run the risk of damage to the machine driven by the motor.
- Regardless run command source (A002/A202) if the RUN/STOP/RESET key is pressed, the inverter starts running. Therefore, if you have selected Run command such as operator or terminal, please handle the RUN/STOP/RESET key after you made sure that the machine/facility can be operated safety.

4. Maintenance, inspection, and parts replacement

WARNING

- Before inspecting the inverter, be sure to turn off the power supply and wait for 10 minutes or more. Otherwise, you run the risk of electric shock.
  (Before inspection, confirm that the charge lamp on the inverter is off.)
  In case the power indication of the operator does not turn ON after power-up, inverter may be damaged. In that case, the inspection must be done after waiting two hours or more of the power OFF. Otherwise, there is a danger of electric shock and/or injury.
- Commit only a designated person to maintenance, inspection, and the replacement of parts.
  (Be sure to remove wristwatches and metal accessories, e.g., bracelets, before maintenance and inspection work and to use insulated tools for the work.) Otherwise, you run the risk of electric shock and injury.

5. Others

WARNING

- Never modify the inverter. Otherwise, you run the risk of electric shock and injury.

CAUTION

- Do not discard the inverter with household waste. Contact an industrial waste management company in your area who can treat industrial waste without polluting the environment.

1.2 Precautions Concerning Electromagnetic Compatibility (EMC)

CE-EMC Installation Guidelines

You are required to satisfy the EMC directive (2004/108/EC) when using a NE-S1 inverter in an EU country.

To satisfy the EMC directive and to comply with standard, you need to use a dedicated EMC filter suitable for each model, and follow the guidelines in this section. Following table shows the compliance condition for reference.

Table 1. Condition for the compliance

Model	Cat.	Carrier frequency	Motor cable
Single phase 200 V class	C2	2 kHz	20 m (Shielded)
Three phases 200 V class	C3	2 kHz	20 m (Shielded)
Three phases 400 V class	C3	2 kHz	20 m (Shielded)

Table 2. Applicable EMC filter

Input class	Inverter model	Filter model (Schaffner)
Single phase 200 V class	NES1-002SB	FS24828-8-07
	NES1-004SB	
	NES1-007SB	FS24828-27-07
	NES1-015SB	
	NES1-022SB	
Three phases 200 V class	NES1-002LB	FS24829-8-07
	NES1-004LB	
	NES1-007LB	
	NES1-015LB	FS24829-16-07
	NES1-022LB	
Three phases 400 V class	NES1-004HB	FS24830-6-07
	NES1-007HB	
	NES1-015HB	FS24830-12-07
	NES1-022HB	
	NES1-040HB	

Important notes

1. Input choke or other equipment is required if necessary to comply with EMC directive from the harmonic distortion point of view (IEC 61000-3-2 and 4).
2. If the motor cable length exceeds 20 m, use output choke to avoid unexpected problem due to the leakage current from the motor cable (such as malfunction of the thermal relay, vibration of the motor, etc...).
3. It must be ensured that the HF (high frequency) impedance between adjustable frequency inverter, filter and ground is as small as possible.
   - Ensure that the connections are metallic and have the largest possible contact areas (zinc-plated mounting plates).
4. Avoid conductor loops that act like antennas, especially loops that encompass large areas.
   - Avoid unnecessary conductor loops.
   - Avoid parallel arrangement of low-level signal wiring and power-carrying or noise-prone conductors.
5. Use shielded wiring for the motor cable and all analog and digital control lines.
   - Allow the effective shield area of these lines to remain as large as possible, i.e., do not strip away the shield (screen) further away from the cable end than absolutely necessary.
   - With integrated systems (for example, when the adjustable frequency inverter is communicating with some type of supervisory controller or host computer in the same control cabinet and they are connected at the same ground + PE-potential), connect the shields of the control lines to ground + PE (protective earth) at both ends. With distributed systems (for example the communicating supervisory controller or host computer is not in the same control cabinet and there is a distance between the systems), we recommend connecting the shield of the control lines only at the end connecting to the adjustable frequency inverter. If possible, route the other end of the control lines directly to the cable entry section of the supervisory controller or host computer. The shield conductor of the motor cables always must be connected to ground + PE at both ends.
   - To achieve a large area contacts between shield and ground + PE-potential, use a PG screw with a metallic shell, or use a metallic mounting clamp.
   - Use only cable with braided, tinned copper mesh shield (type “CY”) with 85 % coverage.
   - The shielding continuity should not be broken at any point in the cable. If the use of reactors, contactors, terminals, or safety switches in the motor output is necessary, the unshielded section should be kept as short as possible.
   - Some motors have a rubber gasket between terminal box and motor housing. Very often, the terminal boxes, and particularly the threads for the metal PG screw connections, are painted. Make sure there is always a good metallic connection between the shielding of the motor cable, the metal PG screw connection, the terminal box, and the motor housing. If necessary, carefully remove paint between conducting surfaces.
6. Take measures to minimize interference that is frequently coupled in through installation cables.
   - Separate interfering cables with 0.25 m minimum from cables susceptible to interference. A particularly critical point is laying parallel cables over longer distances. If two cables intersect (one crosses over the other), the interference is smallest if they intersect at an angle of 90°. Cables susceptible to interference should therefore only intersect motor cables, intermediate circuit cables, or the wiring of a rheostat at right angles and never be laid parallel to them over longer distances.
7. Minimize the distance between an interference source and an interference sink (interference-threatened device), thereby decreasing the effect of the emitted interference on the interference sink.
   - You should use only interference-free devices and maintain a minimum distance of 0.25 m from the adjustable frequency inverter.
8. Follow safety measures in the filter installation.
   - Be sure to ground the EMC filter and inverter to the ground terminal (PE) respectively. Do not ground the metal connection between the filter housing and the inverter or the connection of the shielded wire alone. In the event of a failure, the filter should always be grounded to avoid the risk of touching the filter and getting an electric shock.

   To achieve a protective ground connection for the filter:
   - Ground the filter with a conductor of at least 10 mm^2 cross-sectional area.
   - Connect a second grounding conductor, using a separate grounding terminal parallel to the protective conductor. (The cross section of each single protective conductor terminal must be sized for the required nominal load.)

Installation for NE-S1 series (example of SB models)

Model LB (three phases 200 V class) and HB (three phases 400 V class) are the same concept for the installation.

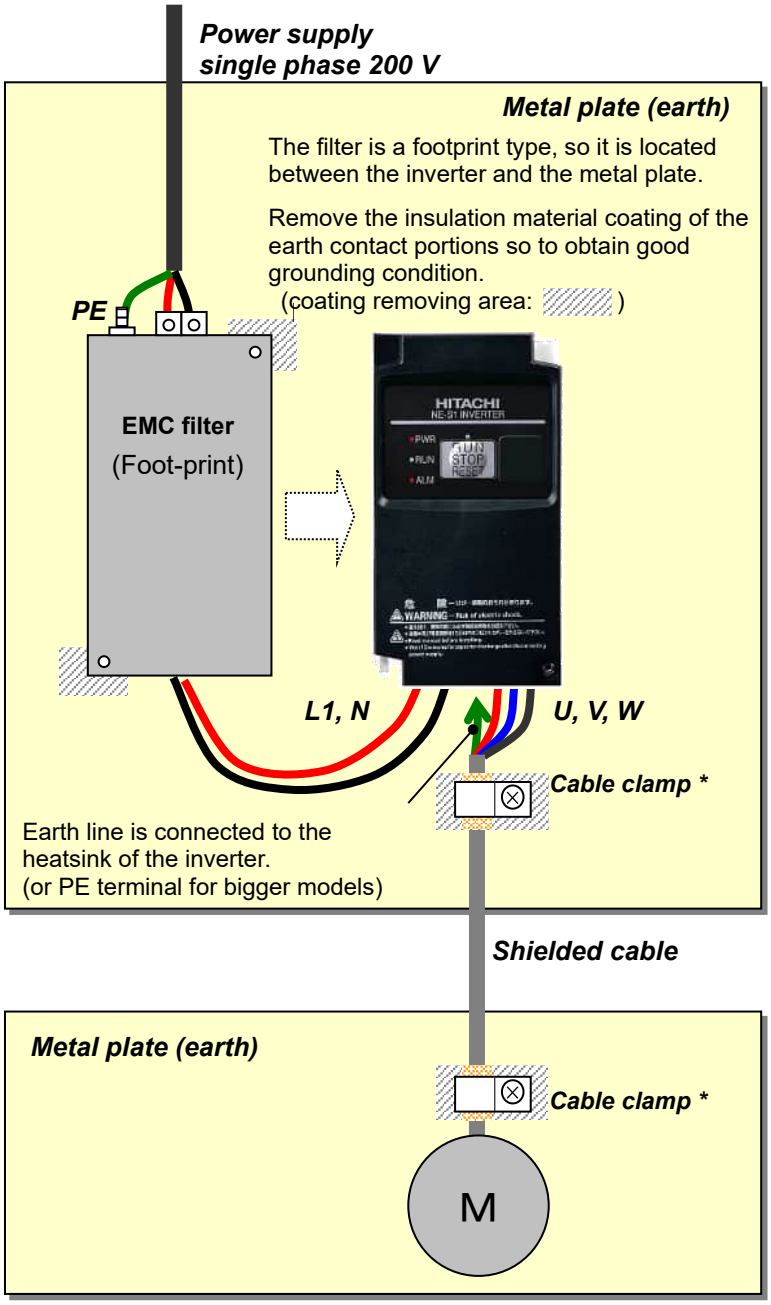

*) Both earth portions of the shielded cable must be connected to the earth point by cable clamps.
Input choke or equipment to reduce harmonic current is necessary for CE marking (IEC 61000-3-2 and IEC61000-3-4) from the harmonic current point of view, even conducted emission and radiated emission passed without the input choke.

Hitachi EMC Recommendations

WARNING

- This equipment should be installed, adjusted, and serviced by qualified personal familiar with construction and operation of the equipment and the hazards involved. Failure to observe this precaution could result in bodily injury.

Confirm the following items to ensure the inverter is within proper operating ranges and conditions.

1. The power supply to NE-S1 inverters must meet these specifications:
- Voltage fluctuation ±10 % or less
- Voltage imbalance ±3 % or less
- Frequency variation ±4 % or less
- Voltage distortion THD ±10 % or less

2. Installation measure:
- Use a filter designed for NE-S1 inverter. Refer to the instruction of the applicable external EMC filter.

3. Wiring:
- Shielded wire (screened cable) is required for motor wiring, and the length must be 20 meter or less.
- If the motor cable length exceeds the value shown above, use output choke to avoid unexpected problem due to the leakage current from the motor cable.
- The carrier frequency setting must be 2 kHz to satisfy EMC requirements.
- Separate the power input and motor wiring from the signal/process circuit wiring.

4. Environmental conditions - when using a filter, follow these guidelines:
- Ambient temperature: -10 to 50 °C
  (Derating is required when the ambient temperature exceeds 40 °C.)
- Humidity: 20 to 90 % RH (non-condensing)
- Vibration: 5.9 m/s^2 (0.6 G) 10 to 55 Hz
- Location: 1000 meters or less altitude, indoors (no corrosive gas or dust)

1.3 Precautions Concerning Compliance with UL and cUL Standards

(Standard to comply with : UL508C,CSA C22.2 No.14-05)

Wiring diagram of inverter

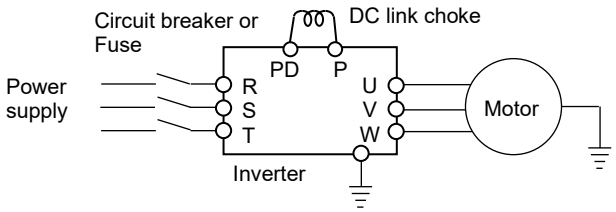

a) Maximum surrounding air temperature rating of 50 ºC.
b) Solid state motor overload protection reacts with max. 150 % of FLA.
c) Suitable for use on a circuit capable of delivering not more than 100,000 rms Symmetrical Amperes, 240 Volts Maximum. For models 200 V class.
Suitable for use on a circuit capable of delivering not more than 100,000 rms Symmetrical Amperes, 480 Volts Maximum. For models 400 V class.
d) Drive has no provision for motor over temperature protection.
e) When protected by J, CC, G or T Class Fuses. Or when protected by a circuit breaker having an interrupting rating not less than 100,000 rms symmetrical amperes, 240 Volts maximum. For models 200V class.
When Protected by J, CC, G or T Class Fuses. For models 400 V class.
f) Integral solid state short circuit protection does not provide branch circuit protection. Branch circuit protection must be provided in accordance with the National Electrical Code and any additional local codes.
g) Install device in pollution degree 2 environment
h) Branch circuit short circuit protection can use fuse or circuit breaker only. For models 200 V class.
Branch circuit short circuit protection can use fuse only. For models 400 V class.
i) Use 60/75 ºC CU wire only.
j) Tightening torque and wire range as shown in the table below.

Model No.	Required Torque (N·m)	Wire Range(AWG)
NES1-002S, 004S	0.8 to 1.0	16 to 14
NES1-007S	1.8	14 to 12
NES1-015S	1.8	12 to 10
NES1-022S	1.8	10
NES1-002L, 004L, 007L	0.8 to 1.0	16 to 14
NES1-015L	1.8	14
NES1-022L	1.8	12
NES1-004H, 007H, 015H	1.8	16
NES1-022H, 040H	1.8	14

k) Distribution fuse and circuit breaker size marking is included in the manual to indicate that the unit shall be connected with a listed cartridge nonrenewable fuse or inverse time circuit breaker, rated 600 VAC with the current ratings as shown in the table below:

Model No.	Fuse		Circuit Breaker	
	Type	Maximum Rating	Type	Maximum Rating
NES1-002S, 004S	Class J, CC, G or T	10 A	Inverse Time	15 A
NES1-007S		20 A		
NES1-015S, 022S		30 A		30 A
NES1-002L*, 004L*	Class J, CC, G or T	10 A	Inverse Time	15 A
NES1-007L*, 015L		15 A		
NES1-022L		20 A		20 A
NES1-004H, 007H, 015H, 022H, 040H	Class J, CC, G or T	15 A	-	-

* In case of using Circuit Breaker, an additional 5 A external protector is needed.

Chapter 2 Inspection of the Purchased Product

This chapter describes the inspection of the purchased product, the product warranty.

2.1 Inspection of the Purchased Product ·····2 - 3

2.2 Method of Inquiry and Product Warranty ·····2 - 4

(Memo)

2.1 Inspection of the Purchased Product

(A) Inspecting the product
Please check the followings after unpacking.
Please contact your supplier or local Hitachi Distributor if there are any problems like below on the product.

(1) Check the product for damage caused during transportation.
(2) Please refer to the included manual and check that
there are no shortages in the included items.
(3) The product is the one you ordered.
(check with the specification label)

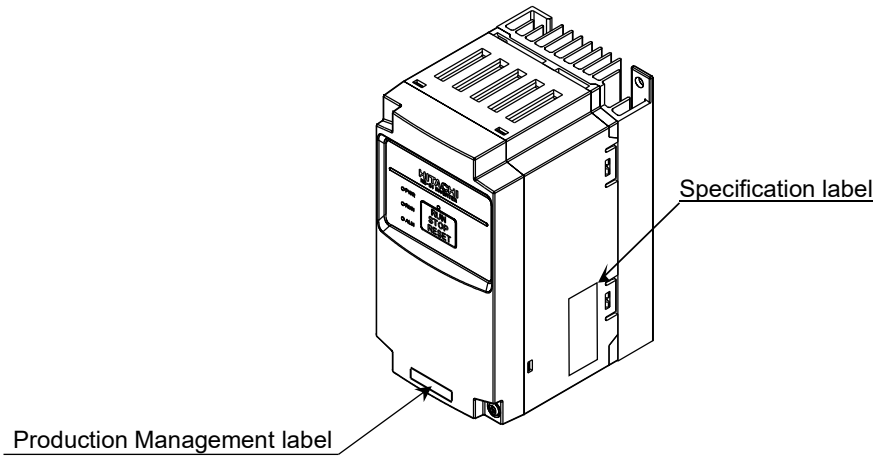

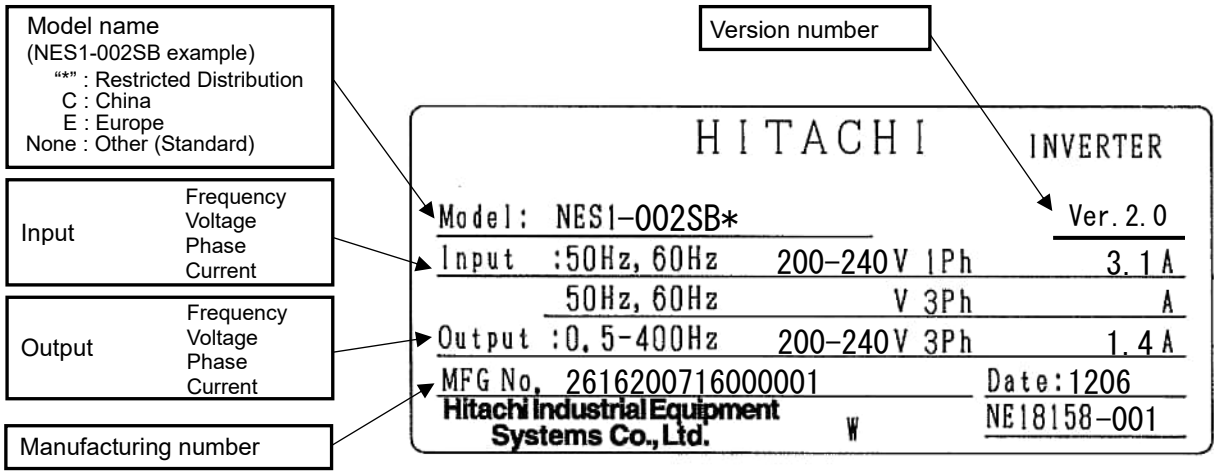

Example of the specification label

2.2 Method of Inquiry and Product Warranty

(A) Method of inquiry
In case of contacting to the store you bought the product or Hitachi, please inform the following information.
(1) Model name of the inverter (included version number)
(2) Manufacturing number (MFG No.)
(3) When you bought the product
(4) Contents of your inquiry
- Damaged portion and condition, and else.

(B) Product warranty
The warranty period under normal installation and handling conditions shall be two (2) years from the date of manufacture, or one (1) year from the date of installation, whichever occurs first.
Even within the warranty period, repair of a product fault will not be covered by the warranty (but the repair will be at your own cost) if:
(1) the fault has resulted from incorrect usage not conforming to the instructions given in this Quick Reference Guide or the repair or modification of the product carried out by an unqualified person,
(2) the fault has resulted from a cause not attributable to the delivered product,
(3) the fault has resulted from use beyond the limits of the product specifications, or
(4) the fault has resulted from disaster or other unavoidable events.

The warranty will only apply to the delivered inverter and excludes all damage to other equipment and facilities induced by any fault of the inverter.

Repair at the user's charge
Following the one-year warranty period, any examination and repair of the product will be accepted at your charge. Even during the warranty period, examination and repairs of faults, subject to the above scope of the warranty disclaimer, will be available at charge.
To request a repair at your charge, contact your supplier or local Hitachi Distributor.

(C) Warranty Terms
The warranty period under normal installation and handling conditions shall be two (2) years from the date of manufacture (“DATE” on specification label), or one (1) year from the date of installation, whichever occurs first. The warranty shall cover the repair or replacement, at Hitachi’s sole discretion, of ONLY the inverter that was installed.
(1) Service in the following cases, even within the warranty period, shall be charged to the purchaser:
a. Malfunction or damage caused by mis-operation or modification or improper repair
b. Malfunction or damage caused by a drop after purchase and transportation
c. Malfunction or damage caused by fire, earthquake, flood, lightening, abnormal input voltage, contamination, or other natural disasters
(2) When service is required for the product at your work site, all expenses associated with field repair shall be charged to the purchaser.
(3) Always keep this Quick Reference Guide handy; please do not lose it. Please contact your Hitachi distributor to purchase replacement or additional Quick Reference Guide.

Chapter 3 Exterior Views

This chapter describes the exterior views and the names of parts.

3.1 Exterior Views and Names of Parts ·····3 - 3

3.2 Name of each portion
(removing the front cover) ·····3 - 4

(Memo)

3.1 Exterior Views and Names of Parts

The figure below shows an exterior view of the inverter.

- model : NES1-002*,004*SB/LB, 007*LB

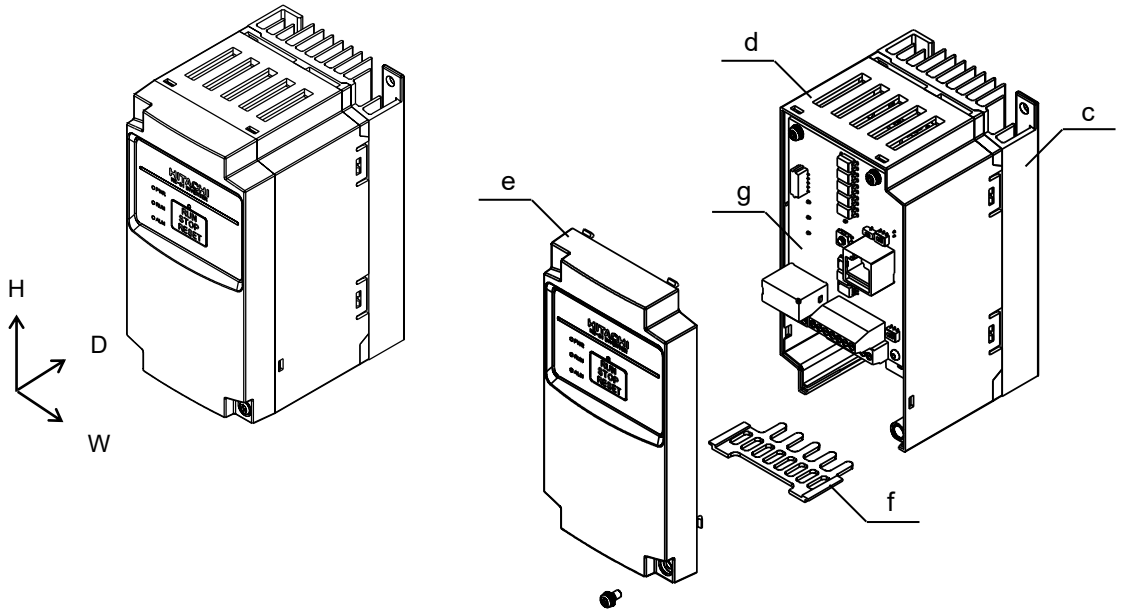

- model : NES1-007*SB, 015,022SB/LB, 004*,007,015,022,040HB

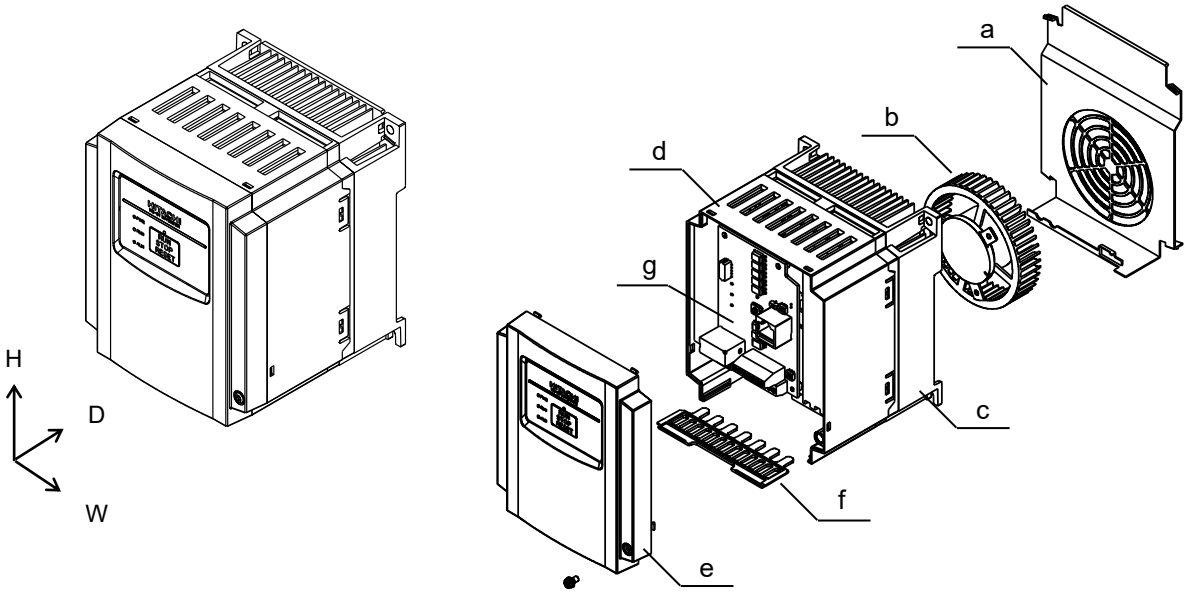

*) 002 to 007SB/LB and 004HB: without Cooling Fan

a) Cooling Fan Cover
b) Cooling Fan
c) Heatsink
d) Case
e) Front Cover
f) Backing plate
g) Control board

3.2 Name of each portion (removing the front cover) Note1)

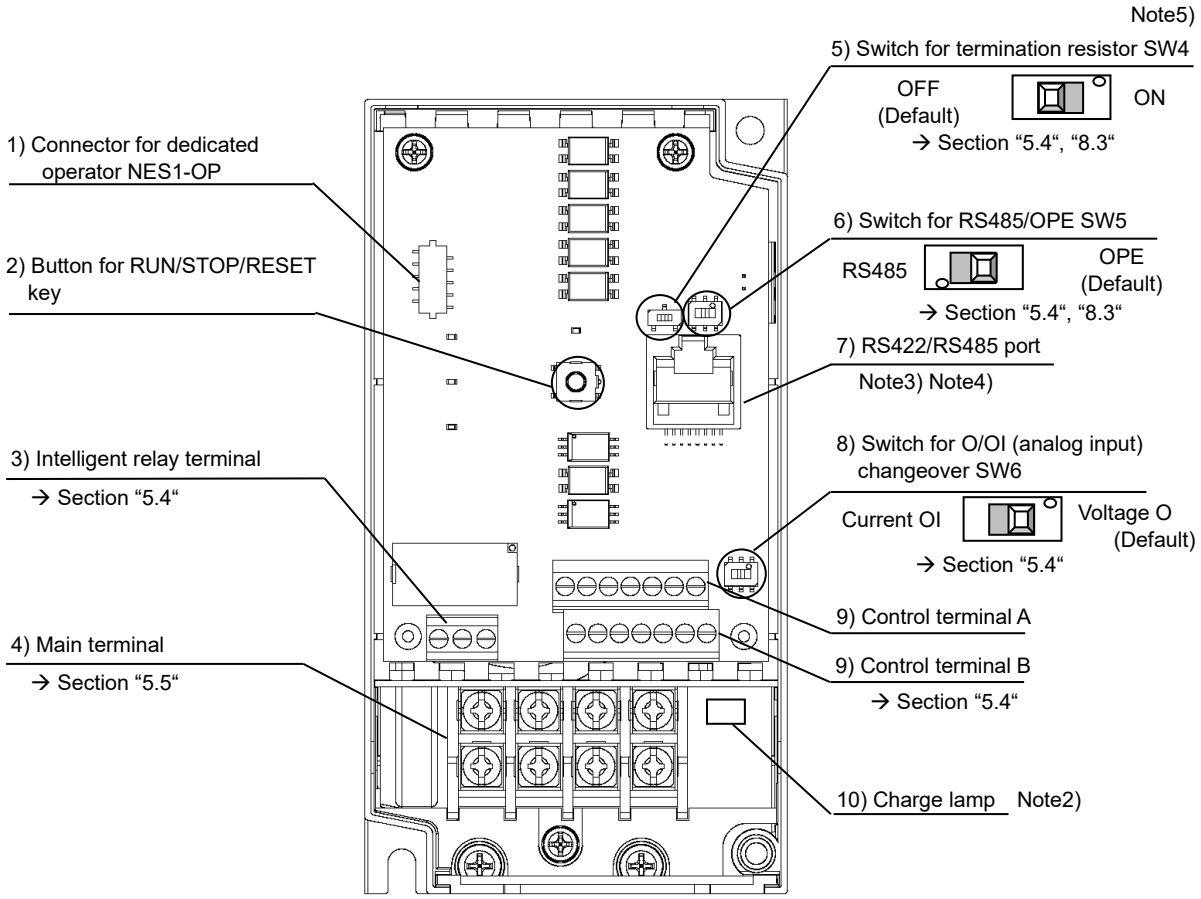

Name	Description
1) Connector for dedicated operator NES1-OP	Dedicated operator for NE-S1 (NES1-OP) can be connected.
2) Button for RUN/STOP/RESET key	Button for RUN/STOP/RESET key on the standard panel.
3) Intelligent relay terminal	Output terminal for intelligent relay (1c-contact).
4) Main terminal	For connecting power supply, inverter output and DC link choke.
5) Switch for termination resistor SW4	Switch for integrated termination resistor (120 Ω) for RS485. Integrated resistor of 120 Ω is connected when turning ON.
6) Switch for RS485/OPE SW5	Changeover switch for RS422/RS485 port.
7) RS422/RS485 port	Connector for RS485 communication line, external operator, or communication line for PC software (RJ45 jack)
8) Switch for O/OI (analog input) changeover SW6	Voltage input (O) or current input (OI) can be selected.
9) Control terminal A,B	Terminal for connecting input/output signals (digital/analog) for the inverter control.
10) Charge lamp	Turns ON when the internal DC bus voltage is 45 V or more. In case of wiring, maintenance or else, be sure to check that this lamp is turned OFF after waiting 10 minutes of power OFF.

Note 1) Refer to section "6.5 How To Operate the Inverter".
Note 2) Position of "10) charge lamp" depends on the model. Refer to section "5.5 Mains wiring" for the details.
Note 3) Pay attention when operating by PC via "7) RS422/RS485 port", because the operation can also be done from the standard panel of the inverter.
Note 4) Be sure to turn power OFF when connecting or disconnecting the operator such as OPE-SRmini, OPE-S/SR/SBK, SOP, SOP-VR, WOP to the "7) RS422/RS485 port".
Note 5) When RS485 communication becomes unstable, please do not use the termination resistor of the inverter. Please use a termination resistor suitable for your environment.

Chapter 4 Installation

This chapter describes how to install the inverter.

4.1 Precautions for installation ·····4 - 3

(Memo)

4.1 Precautions for installation

CAUTION

- Install the inverter on a non-flammable surface, e.g., metal. Otherwise, you run the risk of fire.
- Do not place flammable materials near the installed inverter. Otherwise, you run the risk of fire.
- When carrying the inverter, do not hold its front cover. Otherwise, you run the risk of injury and damage by dropping the inverter.
- Prevent foreign matter (e.g., cut pieces of wire, sputtering welding materials, iron chips, wire, and dust) from entering the inverter. Otherwise, you run the risk of fire.
- Install the inverter on a structure able to bear the weight specified in the Quick Reference Guide. Otherwise, you run the risk of injury due to the inverter falling.
- Install the inverter on a vertical wall that is free of vibrations. Otherwise, you run the risk of injury due to the inverter falling.
- Do not install and operate the inverter if it is damaged or its parts are missing. Otherwise, you run the risk of injury.
- Install the inverter in a well-ventilated indoor site not exposed to direct sunlight. Avoid places where the inverter is exposed to high temperature, high humidity, condensation, dust, explosive gases, corrosive gases, flammable gases, grinding fluid mist, or salt water. Otherwise, you run the risk of fire.
- The inverter is precision equipment. Do not allow it to fall or be subject to high impacts, step on it, or place a heavy load on it. These may cause the inverter to fail.
- Be careful of static electricity when touching the inverter. Static electricity may cause an inverter failure.

(1) Caution during transportation
Please pay attention when carrying the product because it is covered by plastic case.
Especially, do not put pressure onto the front cover. Otherwise, there is a risk of falling down the product.
Please do not use products having damage, and/or lacking components.

(2) Install the inverter on the mounting surface of the iron plate.
The inverter has heat (up to about 150 °C) when the inverter is driving the motor. Since there is a risk of fire, install the inverter on the vertical wall surface of the iron plate. As shown in the figure below, secure a space of 10 cm in the vertical direction and 5 cm in the horizontal direction so as not to block the ventilation of cooling. In particular, if a heating element (reactor, etc.) is nearby, keep it far enough away.
It is possible to install multiple NE-S1 inverters side by side in the cabinet (* side-by-side installation), at this time, the ambient temperature of the installation location is 40 °C or less, and derating of carrier frequency and output current for the inverter is required.

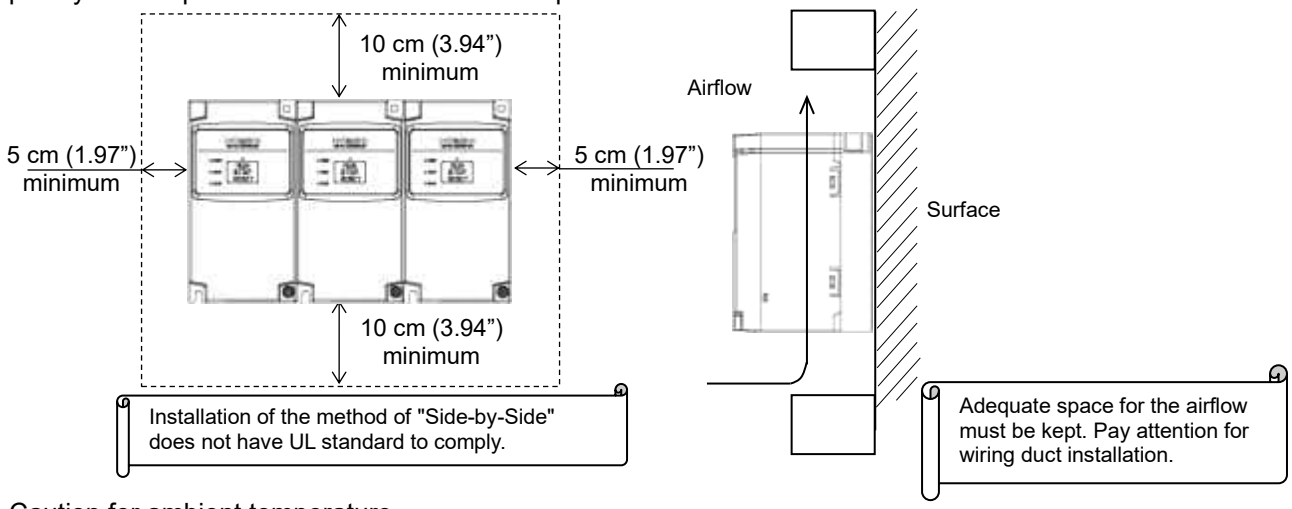

(3) Caution for ambient temperature
Set ambient temperature at installation site within the standard specification range (-10 to 50 °C).
Measure ambient temperature at the place apart by 5 cm from the bottom center of inverter main body and confirm that it is within the allowable temperature range. Using the inverter at higher temperature than allowable temperature may result in shortening of lifetime of inverter (especially of electrolytic capacitor). Derating curve is shown on section "12.3 Derating Curves".

(4) Do not install the inverter in such places as high temperature, high humidity, or easy to condensate.
Use the inverter within the allowable humidity range (20 to 90 %RH) described in standard specifications.
Especially, please use it in place where no dew condensation occurs. If dew condensation occurs and beading is generated inside the inverter, electronic parts are short-circuited each other to cause a failure.
Also, please avoid installing it in a location which receives direct sunlight.

(5) Caution for installation environment
Please avoid installing the inverter in such places where dust, corrosive gas, explosive gas, flammable gas, mist of grinding fluid, or salt pollution, etc. exists. Invasion of dust, dirt etc. into the inverter may cause a failure. So, when you use it in dusty place by necessity, please devise a countermeasure such as putting it into a closed type cabinet.

⚠ WARNING

- For safety, do not open the surface cover while the power is on.

⚠ CAUTION

- Depending on the ambient temperature, it is necessary to reduce the carrier frequency or raise the inverter capacity.

(6) Cautions for installation direction

Surface of the installation must be no vibration, and should be capable of holding the weight of the product. And the product must be fixed to the surface with proper screws with vertical direction.
Be sure to screw using all the screw holes for the installation.
(002L/S,004L/S,007L: 2 positions, 004H,007S/H,015L/S/H,022L/S/H,040H: 4 positions)
There is a risk of performance failure, and/or breakdown when the product is not installed vertical direction.

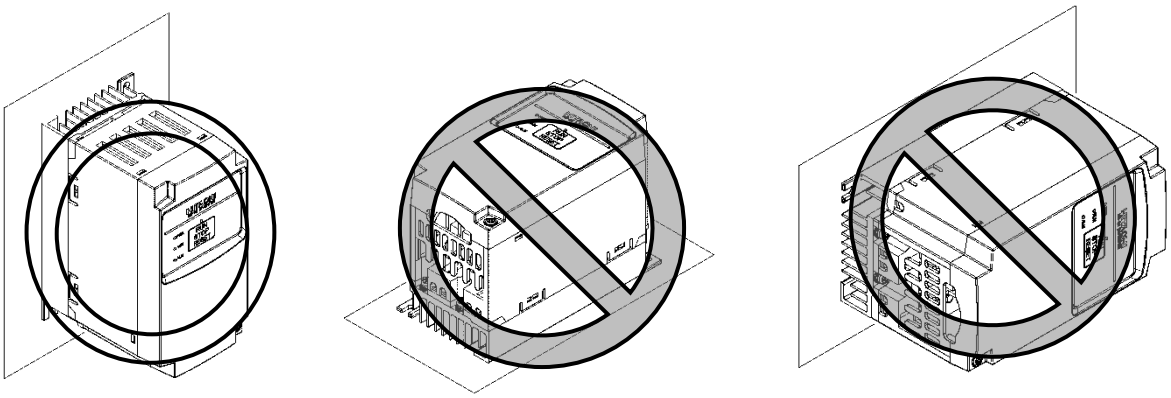

(7) Cautions for installation into the cabinet

Please pay attention to the location of the ventilation holes of the inverter and the cabinet, in case of side-by-side installation and using ventilation fan.
Cooling performance of the inverter highly depends on the location of the holes. Please pay high attention to the ambient temperature of the inverter to be less than the specified value.

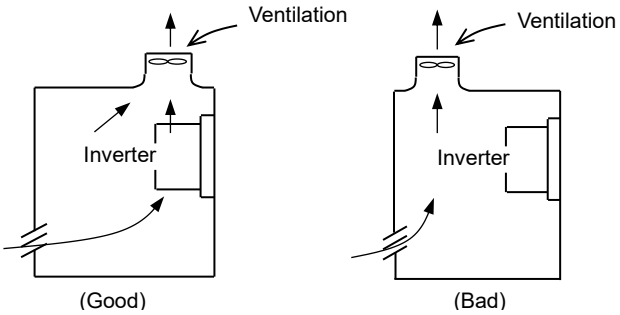

Position of the ventilation

(8)Watt Loss

Single phase / Three phases 200 V class

Model name	002S/L	004S/L	007S/L	015S/L	022S/L
Watt Loss (100 % load)(W)	22	30	48	79	104
Efficiency at rated load (%)	90	93	94	95	95.5

Three phases 400 V class

Model name	004H	007H	015H	022H	040H
Watt Loss (100 % load)(W)	35	56	96	116	167
Efficiency at rated load (%)	92	93	94	95	96

Chapter 5 Wiring

This chapter describes the wiring of main circuit and control signal terminals.

5.1 Precautions for Wiring ·····5 - 3

5.2 How to attach and remove the front cover·····5 - 4

5.3 How to attach the Dedicated operator (NES1-OP) ·····5 - 5

5.4 Wiring and terminal description ·····5 - 6

5.5 Mains wiring·····5 - 9

5.6 Wiring of the control circuit ·····5 - 14

5.7 Connection with the programmable controller (PLC) ·····5 - 16

5.8 Notes on using multiple inverters ·····5 - 17

(Memo)

5.1 Precautions for Wiring

WARNING

- In order to prevent damage caused by static electricity, please remove the static electricity of the body touch the nearby metal before touching this product.
- Be sure to ground the inverter. Otherwise, you run the risk of electric shock or fire.
- Commit wiring work to a qualified electrician. Otherwise, you run the risk of electric shock or fire.
- Before wiring, make sure that the power supply is off. Otherwise, you run the risk of electric shock or fire.
- Perform wiring only after installing the inverter. Otherwise, you run the risk of electric shock or injury.
- The inverter must be powered OFF before you change any of the slide switch settings. Otherwise, you run the risk of electric shock or injury.

CAUTION

- Make sure that the voltage of AC power supply matches the rated voltage of your inverter. Otherwise, you run the risk of injury or fire.
- Do not input single phase AC power supply into the three phases input type inverter. Otherwise, you run the risk of fire.
- Do not connect AC power supply to any of the output terminals (U(T1), V(T2), and W(T3)) and the ground terminal. Otherwise, you run the risk of injury or fire.
- NE-S1 series inverter does not have terminals for braking resistor. Do not connect the resistor. Otherwise, there is a risk of fire.
- Connect an earth-leakage breaker to the power input circuit. Otherwise, you run the risk of fire.
- Use only the power cables, earth-leakage breaker, and magnetic contactors that have the specified capacity (ratings). Otherwise, you run the risk of fire.
- Do not use the magnetic contactor installed on the primary and secondary sides of the inverter to stop its operation.
- Tighten each screw to the specified torque. No screws must be left loose. Otherwise, you run the risk of fire.
- Before operating slide switch in the inverter, be sure to turn off the power supply. Otherwise, you run the risk of electric shock and injury.
- Please make sure that earth or ground screw is tighten properly and completely.
- First, check the screws of output terminal (U(T1), V(T2), and W(T3)) are properly tighten, and then tighten the screws of input terminal (R(L1),S(L2) and T(L3)).
- The factory default value of the intelligent relay output terminals [AL1, AL2-AL0] setting (C036) is the b-contact (NC) setting between AL1 and AL0. Also, even if it is initialized, it returns to the b-contact (NC) setting. When using this inverter as a substitute for a conventional model or when using it as a built-in system, check the intelligent relay output terminals [AL1, AL2-AL0] setting (C036), and use it according to the peripheral circuit logic.
  There is a risk of system down due to contact logic mismatch.

5.2 How to attach and remove the front cover

(1) How to remove

1) Loosen up the screw.

2) Remove the front cover by pressing the bottom side of the cover to the direction shown below.

3) Remove the backing plate like shown below in case of wiring.

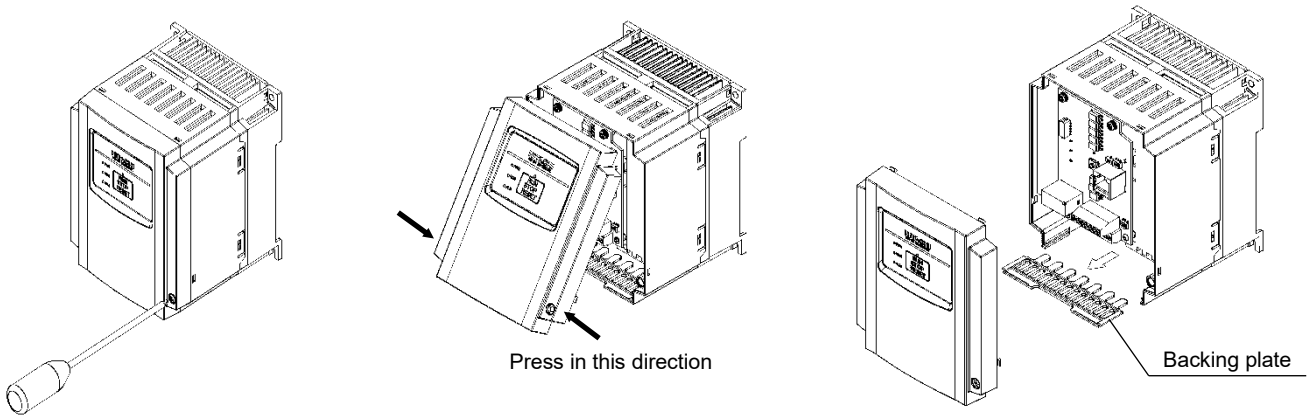

Screw for fixing the front cover is located at right-bottom side.

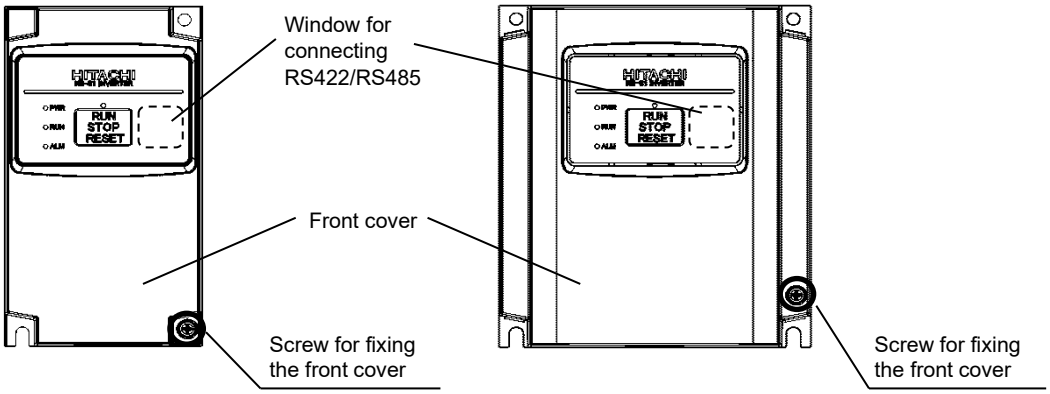

(2) It is necessary to make window on the front cover when using RS485 communication, remote operator (OPE-S/SR/SBK/SRmini, SOP, SOP-VR, WOP), or PC software (ProDriveNext). See above for the position of the window.

- Be sure to make window after removing the front cover.
- There are cutouts at the window, so it can be removed easily by pressing up side and bottom side of the window alternately.
- The window cannot be restored if it is once opened. Please use commercially supplied RJ45 connector cap or the like if necessary.

(3) How to attach

- Press the front cover to the case until there is a click sound.
- Do not tighten the screw too much.

5.3 How to attach the Dedicated operator (NES1-OP)

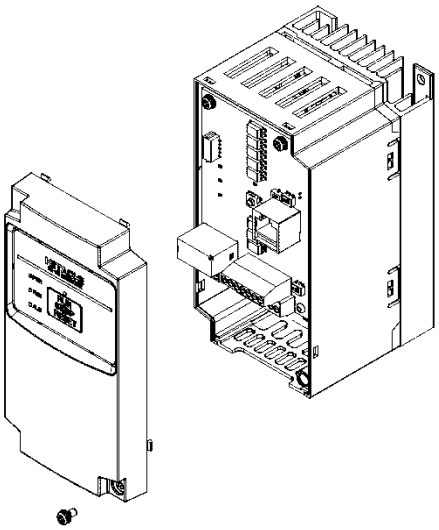

1) Remove the front cover from case.

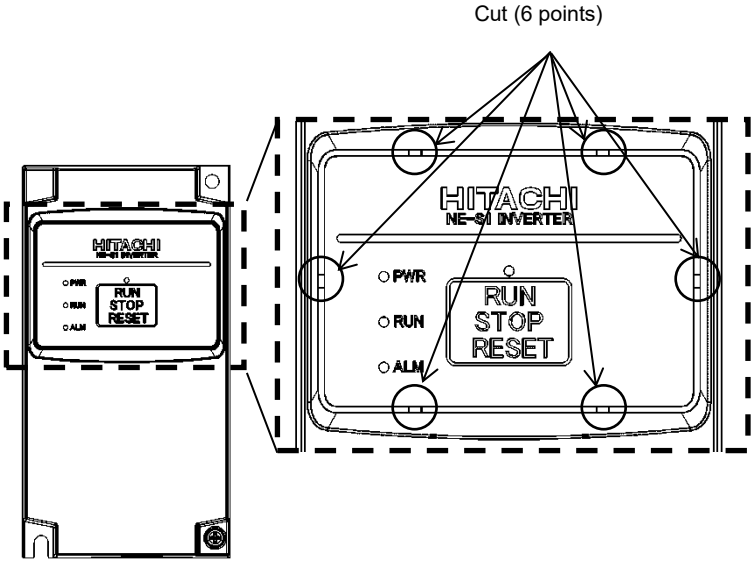

2) Cut the standard panel by thin–blade-nipper and take it off.

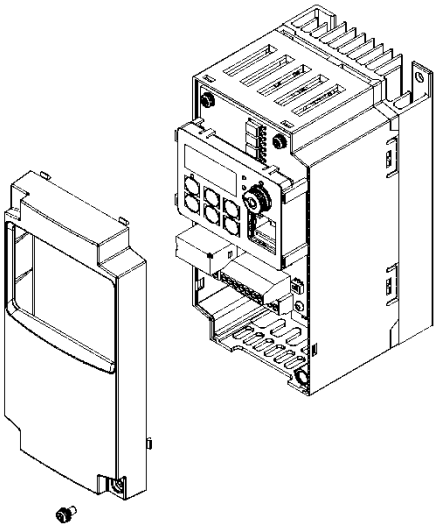

3) The connector of the dedicated operator (NES1-OP) connects to the connector on the circuit board. And attach it to put the circuit board.

4) Attach the front cover.

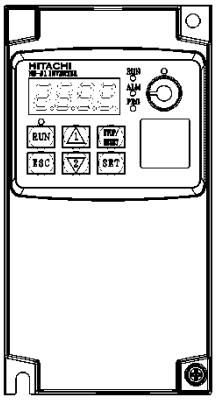

5) Figure of installation (NES1-OP)

Note) Please set SW4, SW5 on the board, before installation of dedicated operator (NES1-OP).

5.4 Wiring and terminal description

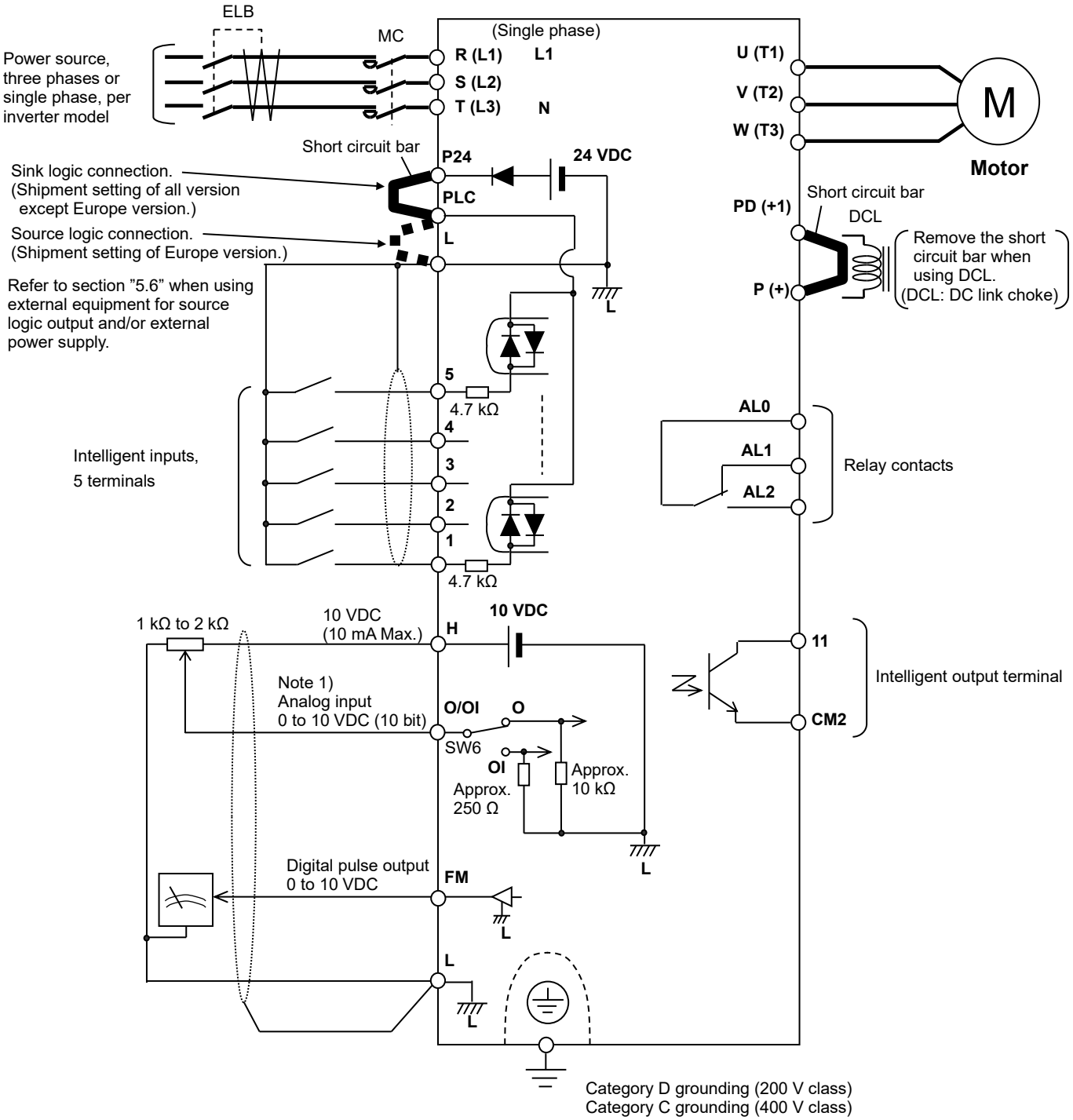

Note 1) Above shows an example of voltage (O) input. Changeover of SW6 must be done in case of current (OI) input.
(Refer to "(3) Changeover switch description" below.)

(1) Main terminal description

Symbol	Name	Description
R (L1) / L1 S (L2) T (L3) / N	Power input terminals	Connect power supply. - Use L1 and N terminal in case of single phase 200 V model power supply.
U (T1) V (T2) W (T3)	Inverter output terminals	Connect three phases motor.
PD (+1) P (+)	DC link choke connection terminals	First, remove the short circuit bar between PD (+1) and P (+) terminals. Then connect optional DC link choke for improving the input harmonics.
G (⏚)	Ground terminal	To make grounding. Be sure to make this grounding to avoid electric shock, and for improving the EMC performance. The terminal is located on the heatsink.

(2) Control terminal description

Category		Symbol	Name	Description	Electrical characteristics
Analog	Power supply	L	Common for input signals and pulse output	Common for internal control power supply, digital inputs, analog input, and digital pulse output.	
		H	Power supply for external potentiometer	10 VDC power supply. Used with variable resistor for O input.	Max.10 mA output
	Frequency set	O/OI	Analog voltage (Use SW6 for changeover)	Frequency set via 0 to 10 VDC input.	Input impedance: apprx.10 kΩ Allowable range; -0.3 to +12 VDC
			Analog current (Use SW6 for changeover)	Frequency set via 0 to 20 mA. Parameter adjustment should be done in case of 4 to 20 mA.	Input impedance: apprx.250 Ω Allowable range; 0 to 24 mA
Digital	Power supply	L	Common for input signals and pulse output	Common for internal control power supply, digital inputs (in case of sink logic), analog input, and digital pulse output.	
		P24	Power supply for digital inputs	24 VDC power supply for input contact. (Common terminal in case of source logic) note)	Max.100 mA output
		PLC	Power supply terminal for input terminals	Sink logic: connected to P24 Source logic: connected to L Remove the short circuit bar when using external power supply for controlling the dry contact inputs.	

note) The voltage of P24 changes like the chart below by a load electric current. In the case of use, please be careful about external equipment. (remote operator: OPE-S/SR/SBK/SRmini, SOP, SOP-VR, WOP)
As for this chart application, it is just by December 2012 production.
Thereafter, all models become the curve to show in 015,022L/SB.

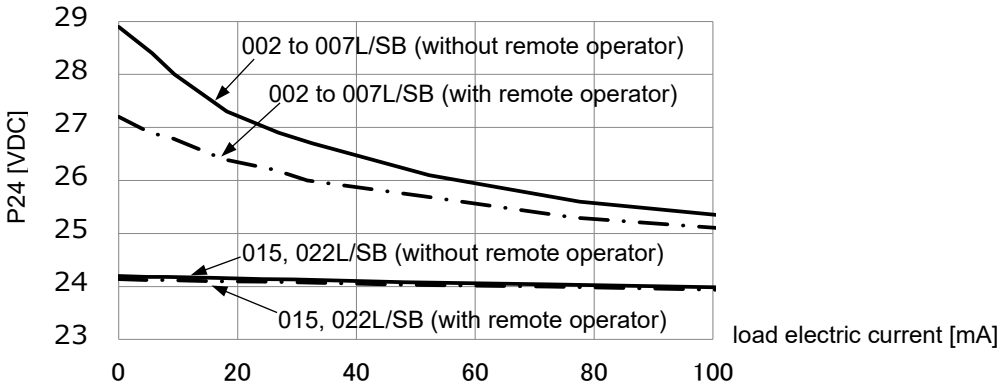

P24 - load electric current properties

Category			Symbol	Name	Description	Electrical characteristics
Digital	Input	Contact	5 4 3 2 1	Intelligent input terminals	5 functions from 35 functions can be assigned to terminal 1 to 5. Sink or source logic can be selected.	Voltage between each input and PLC - V(ON): Min.18 VDC - V(OFF): MAX.3 VDC - Max. allowable voltage: 27 VDC - Load current: 5 mA (24 VDC)
Digital	Output	Open-collector	11	Intelligent output terminal	One function from 28 functions can be assigned.	Open collector output Between 11 and CM2 - Voltage drop during ON: 4 VDC or less - Max. allowable voltage: 27 VDC - Max. allowable current: 50 mA
Digital	Output	Open-collector	CM2	Common for intelligent output terminal	Common for the intelligent output terminal 11.	Max. allowable current: 50 mA
Digital	Output	Relay	AL0 AL1 AL2	Intelligent relay outputs	One function from 28 functions can be assigned. (1c-contact)	Max. contact capacity AL1-AL0: 250 VAC, 30 VDC AC: 2 A (resistive), 0.2 A (inductive) DC: 3 A (resistive), 0.6 A (inductive) AL2-AL0: 250 VAC, 30 VDC AC: 1 A (resistive), 0.2 A (inductive) DC: 1 A (resistive), 0.2 A (inductive) Min. contact capacity 100 VAC, 10 mA 5 VDC, 100 mA
Digital	Output	Pulse output	FM	Digital pulse output	Output pulse frequency Max. 3.6 kHz	Pulse voltage: 0/10 VDC output Max. allowable current: 1 mA

(3) Changeover switch description

Refer to section “3.2 Name of each portion (removing the front cover)” for the location of the switches.

⚠ CAUTION

- Adjustment of the switch must be done during power off. Otherwise, there is a risk of electric shock.
- Power ON must be done after closing the front cover. Do not open the front cover during power up, or when there is a remaining voltage. There is a risk of electric shock.

Symbol	Name	Description	
SW4	Switch for termination resistor	Select able/disable of the termination resistor of RS485 port (RJ45).	
		OFF (left side)	Termination resistor (120 Ω) Disable (Default)
		ON (right side)	Termination resistor (120 Ω) Able
SW5	Switch for RS485/OPE	Select depending on the options and communication method, connected to RS422/RS485 port.	
		OFF (right side)	For remote operator (OPE-S/SR/SBK/SRmini, SOP, SOP-VR, WOP), ProDriveNext (Default)
		ON (left side)	For RS485 communication (Modbus-RTU)
SW6	Switch for O/OI (analog input) changeover	Select analog input method either voltage input (O) or current input (OI).	
		OFF (left side)	Current input (0 to 20 mA) OI
		ON (right side)	Voltage input (0 to 10 VDC) O (Default)

5.5 Mains wiring

(1) Cautions on wiring

Be sure to confirm that the charge lamp is turned OFF before the wiring work.
Once it is powered up, there will be a remaining voltage at the DC bus capacitor for a certain period regardless the motor operation.
Wiring work must be done 10 minutes after the power off, and after confirming the safety of personnel.
In case the power indication of the operator does not turn ON after power-up, inverter may be damaged. In that case, the wiring must be done after waiting 2 hours or more of the power OFF. Otherwise, there is a danger of electric shock and/or injury.

1) Power input terminals (R/L1, S, T/N)

- Use earth leakage breaker (ELB) for protection between power supply and input terminals (R/L1, S, T/N).
- The ELB is recommended to have bigger capability for the high frequency sensitivity, so to avoid malfunction.

Distance between inverter and motor	Cutoff current of ELB
100 m or less	30 mA
300 m or less	100 mA
800 m or less	200 mA

[Rough indication of earth leakage current] 30 mA/km : use CV cable with metallic tube. Leakage current will be approximately 8 times more when using HIV cable.
Therefore, it is recommended to use the ELB of which the rated sensitivity current is 8 times as high as that given in the left table.
Previously mentioned “leakage current” is based on the RMS value of fundamental wave, excluding harmonic current.

- There is a possibility that the malfunction or failure of the customer’s system when the protection function of the inverter is activated. Please use magnetic contactor to shutoff the inverter power supply.
- Do not turn power ON and OFF by the magnet contactor at the primary side or secondary side of the inverter to start and stop the motor. Use operation command (FW, RV) from the control input terminal in case of using external signal.
- Do not use the three phases input type inverter with single phase input (phase loss). Otherwise, there is a risk of inverter failure. Single phase input to the three phases type inverter will result in an undervoltage, overcurrent, or will result in a damage of the inverter. DC bus capacitor will be charged even under phase loss and it is dangerous. Refer to “(1) Cautions on wiring” for the wiring.
- In the following cases, there is a risk of breakdown of the internal converter module, and/or shortening drastically the lifetime of DC bus capacitors due to an increase of the ripple current. Especially, if high reliability is required on the system, use AC reactor between power supply and inverter. And if a thunder is expected, use appropriate lightening protection equipment.
  - Unbalance at the input voltage (3 % or more)
  - The capacity of power supply is 10 times the inverter capacity or more, and 500 kVA or more.
  - Sudden voltage change occurred.
    (Example) - 2 or more inverters are connected at the same net with short cable.
    - Inverter is connected in parallel with the thyristor equipment with short cable.
    - Phase advancing capacitor is switching on a same net.
- Frequency of the power ON/OFF must be once/3 minutes or longer interval. Otherwise, there is a danger of inverter failure.
- An inverter run by a private power generator may overheat the generator or suffer from a deformed output voltage waveform of the generator. Generally, the generator capacity should be five times greater than that of the inverter (kVA) in a PWM control system, or six times greater than that of the inverter (kVA) in a PAM control system.
- In the case of important equipment, to shorten the non-operational time of inverter failure, please provide a backup circuit by commercial power supply or spare inverter.

- In case of commercial power source switching functionality, the contacts of MC1 and MC2 must be mechanically interlocked with each other. Otherwise you may damage the inverter and the danger of injury and/or fire. Please refer to following diagram.

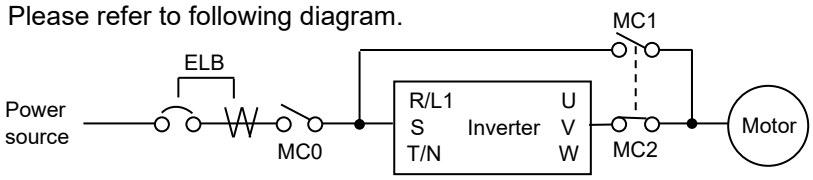

2) Inverter output terminals (U (T1), V (T2), and W (T3))

- Use larger gauge cable than the specified applicable cable (refer to following "(4) Wiring and Accessories") for the wiring of output terminals to prevent the output voltage drop between the inverter and motor. Especially at low frequency output, a voltage drop due to cable resistance will cause the motor torque to decrease.
- Do not connect a phase advancing capacitor or surge absorber on the output side of the inverter. If connected, the inverter may trip or the phase advancing capacitor or surge absorber may be damaged.
- If the cable length between the inverter and motor exceeds 20 m (especially in the case of 400 V class models), the stray capacitance and inductance of the cable may cause a surge voltage at motor terminals, resulting in a motor burnout. A special filter to suppress the surge voltage is available. If you need this filter, contact your supplier or local Hitachi Distributor.
- When connecting multiple motors to the inverter, connect a thermal relay to the inverter output circuit for each motor.
- The RC rating of the thermal relay must be 1.1 times as high as the rated current of the motor. The thermal relay may go off too early, depending on the cable length. If this occurs, connect an AC reactor to the output of the inverter.

3) DC link choke connection terminals (PD (+1) and P (+))

- Use these terminals to connect the optional DC link choke (DCL).
  As the factory setting, terminals P (+) and PD (+1) are connected by a short circuit bar.
  Remove this to connect the DCL.
- The cable length between the inverter and DCL must be 5 m or less.

Remove the short circuit bar only when connecting the DCL. If the short circuit bar is removed and the DCL is not connected, power is not supplied to the main circuit of the inverter, and the inverter cannot operate.

4) Inverter ground terminal (G ⏚)

- Be sure to ground the inverter and motor to prevent electric shock.
- When grounding the inverter, refer to the relevant regulations such as IEC60364.
- Use a grounding cable thicker than the specified applicable cable (refer to following "(4) Wiring and Accessories"), and make the ground wiring as short as possible.
- When grounding multiple inverters, avoid a multi-drop connection of the grounding route and formation of a ground loop, otherwise the inverter may malfunction.

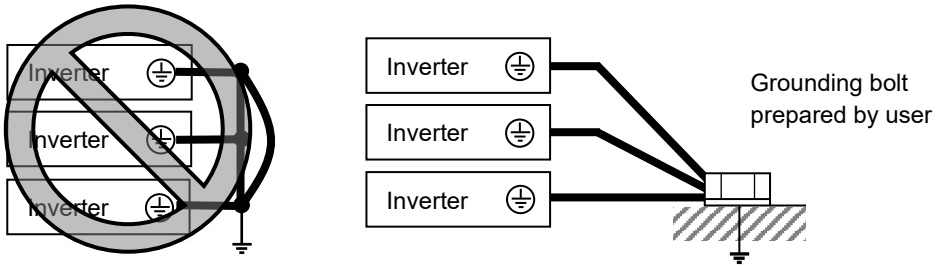

(2) Layout of main terminal

The figures below show the terminal layout on the main terminal block of the inverter.
Before wiring the main terminal block, open the front cover and remove the backing plate.

Single phase 200 V 0.2 to 0.4 kW
Three phases 200 V 0.2 to 0.75 kW

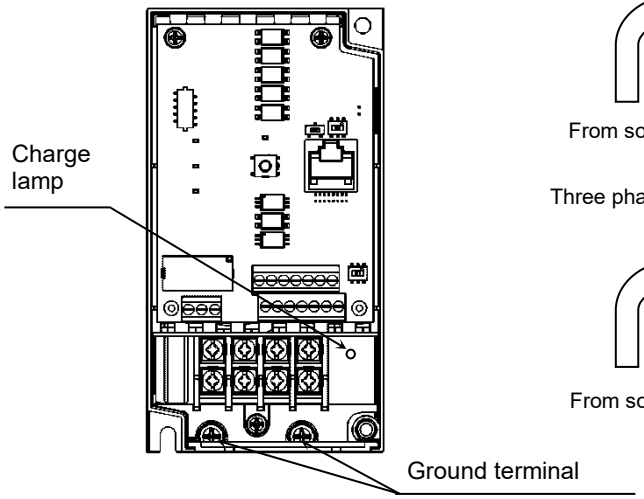

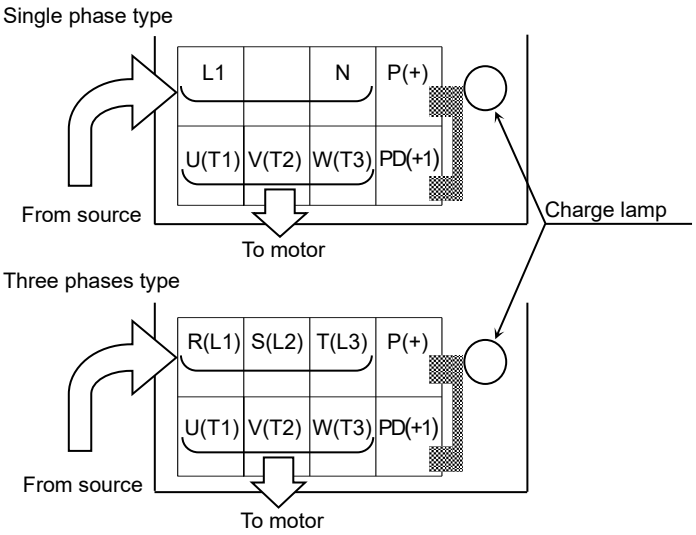

Single phase 200 V 0.75 to 2.2 kW
Three phase 200 V 1.5, 2.2 kW
Three phase 400 V 0.4 to 4.0 kW

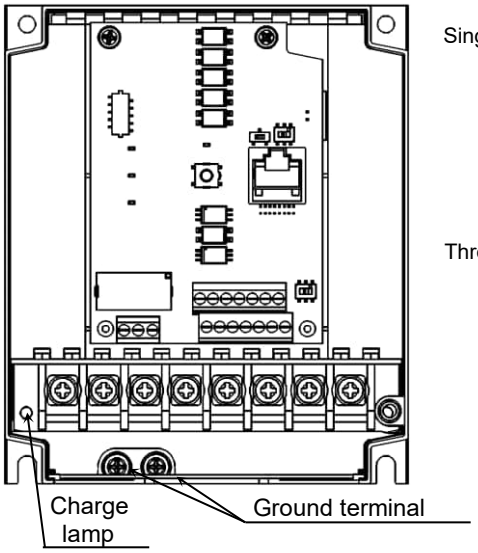

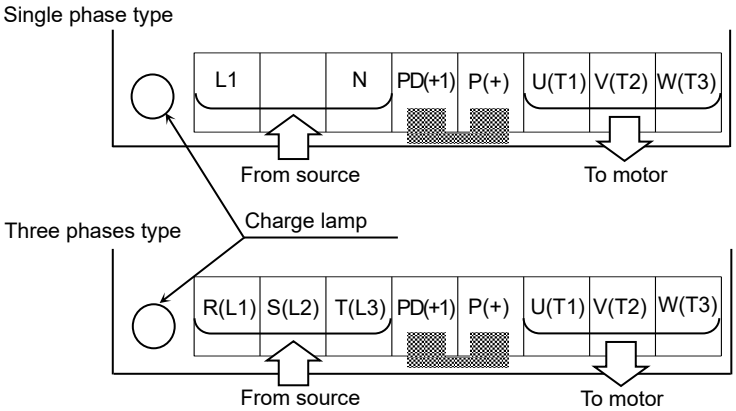

(3) Applicable peripheral equipment

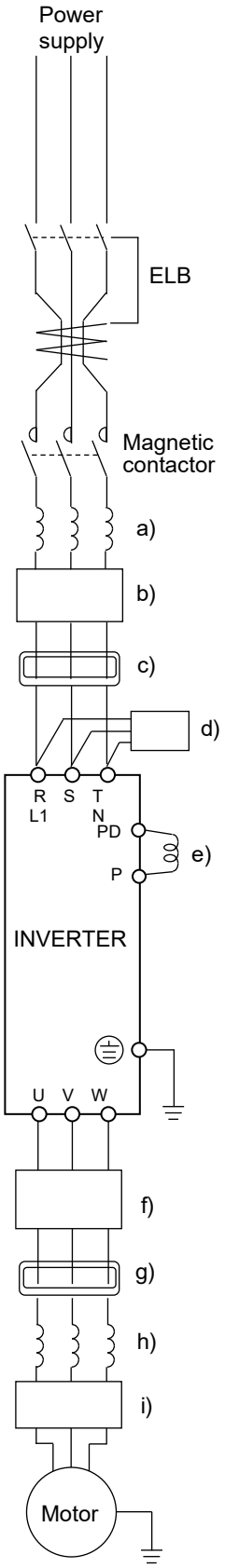

Note 1: The peripheral equipment described here is applicable when the inverter connects a standard Hitachi three phases, 4-pole squirrel-cage motor.

Note 2: Select breakers that have proper capacity.
(Use breakers that comply with inverters.)

Note 3: Use earth-leakage breakers (ELB) to ensure safety.

Note 4: Use copper electric wire (HIV cable) of which the maximum allowable temperature of the insulation is 75 °C.

Note 5: If the power line exceeds 20 m, cable that is thicker than the specified applicable cable must be used for the power line.

Note 6: Tighten each terminal screw with the specified tightening torque.
Loose terminal screws may cause short circuits and fire.
Tightening a terminal screw with excessive torque may cause damage to the terminal block or inverter body.

Note 7: Select an earth-leakage breaker (ELB) of which the cutoff current matches the total length of cables connected between the inverter and power supply and between the inverter and motor. Do not use a high-speed type ELB but use a delayed-type ELB because the high-speed type may malfunction.

Note 8: When a CV cable is used for wiring through a metal conduit, the average current leakage is 30 mA/km.

Note 9: When an IV cable, which has a high relative dielectric constant, is used, the leakage current is about eight times as high as the standard cable. Therefore, when using an IV cable, use the ELB of which the cutoff current is eight times as high as that given in the right table. If the total cable length exceeds 100 m, use a CV cable.

Total cable length	Cutoff current of ELB (mA)
100 m or less	30
300 m or less	100
800 m or less	200

Name	Description
a) AC reactor on input side (for harmonic control, power supply coordination, and power factor improvement) (ALI-XXX) Note10	Use this reactor to control harmonic waves or when the imbalance of power supply voltage is 3 % or more, when the power supply capacity is 500 kVA or more, or when the power voltage may change rapidly. This reactor also improves the power factor.
b) Noise filter for inverter (NF-XXX) Note10	This noise filter reduces the conductive noise that is generated by the inverter and transmitted in cables. Connect this noise filter to the primary side (input side) of the inverter.
c) Radio noise filter (Zero-phase reactor) (ZCL-X)	The inverter may generate radio noise through power supply wiring during operation. Use this noise filter to reduce the radio noise (radiant noise).
d) Radio noise filter on input side (Capacitor filter) (CFI-X)	Use this noise filter to reduce the radiant noise radiated from input cables.
e) DC link choke (DCL-X-XX)	Use this DC link choke to control the harmonic waves generated by the inverter.
f) Noise filter on the output side (ACF-CX)	Connect this noise filter between the inverter and motor to reduce the radiant noise radiated from cables for the purpose of reducing the electromagnetic interference with radio and television reception and preventing malfunctions of measuring equipment and sensors.
g) Radio noise filter (Zero-phase reactor) (ZCL-X)	Use this noise filter to reduce the noise generated on the output side of the inverter. (This noise filter can be used on both the input and output sides.)
h) AC reactor for the output side For reducing vibrations and preventing thermal relay malfunction (ACL-X2-XX)	Using the inverter to drive a motor may cause larger vibrations of the motor when compared with driving it directly with the commercial power supply. Connect this AC reactor between the inverter and motor to lessen the pulsation of motor. Also, connect this AC reactor between the inverter and motor, when the cable length between them is long (10 m or more), to prevent thermal relay malfunction due to the harmonic waves that are generated by the switching operation on the inverter. Note that the thermal relay can be replaced with a current sensor to avoid the malfunction.
i) LCR filter	This filter converts the inverter output voltage into a sinusoidal waveform.

Note10: If there are any thyristor equipment belonging to the same net, and a possibility that the surge voltage is given to the net, change the connecting order of above a) and b). (Connecting order: Net→ELB→Contactor→Noise filter b)→AC reactor on input side a)→Inverter).
Otherwise, there is a danger of damaging inverter and/or fire.

(4) Wiring and Accessories

The table below lists the specifications of cables, crimp terminals, and terminal screw tightening torques for reference.

Input Voltage	Motor output (kW)	Applicable inverter model NES1-xxxx** Note8)	Wiring			Accessories Note1)		
			Gauge of power line cable (mm^2) Note3),4),6)	Size of terminal screw (Terminal width (mm))	Tightening torque (N·m) Note6)	Earth-leakage breaker (ELB) Note2),5),6)	Magnetic contactor (MC) Note2)	Fuse (UL-rated, class J,600 V) Note6)
Single phase 200 V	0.2	002S	AWG14 (2.0)	M3.5 (7.6)	1.0	EB-30E (5 A)	HS10	10 A
	0.4	004S	AWG14 (2.0)	M3.5 (7.6)	1.0	EB-30E (10 A)	HS10	10 A
	0.75	007S	AWG14 (2.0)	M4 (10)	1.4	EB-30E (15 A)	HS10	15 A
	1.5	015S	AWG10 (5.5)	M4 (10)	1.4	EB-30E (20 A)	HS20	20 A
	2.2	022S	AWG10 (5.5)	M4 (10)	1.4	EB-30E (20 A)	HS20	30 A
Three phases 200 V	0.2	002L	AWG16 (1.25)	M3.5 (7.6)	1.0	EB-30E (5 A)	HS10	10 A
	0.4	004L	AWG16 (1.25)	M3.5 (7.6)	1.0	EB-30E (10 A)	HS10	10 A
	0.75	007L	AWG16 (1.25)	M3.5 (7.6)	1.0	EB-30E (10 A)	HS10	15 A
	1.5	015L	AWG14 (2.0)	M4 (10)	1.4	EB-30E (15 A)	HS10	15 A
	2.2	022L	AWG14 (2.0)	M4 (10)	1.4	EB-30E (20 A)	HS20	20 A
Three phases 400 V	0.4	004H	AWG16 (1.25)	M4 (10)	1.4	RXK60-S (5 A)	HS10	10 A
	0.75	007H	AWG16 (1.25)	M4 (10)	1.4	RXK60-S (10 A)	HS10	10 A
	1.5	015H	AWG16 (1.25)	M4 (10)	1.4	RXK60-S (10 A)	HS10	10 A
	2.2	022H	AWG14 (2.0)	M4 (10)	1.4	RXK60-S (15 A)	HS10	15 A
	4.0	040H	AWG14 (2.0)	M4 (10)	1.4	RXK60-S (15 A)	HS10	15 A

Note 1) The peripheral equipment described here are applicable when the inverter connects a standard Hitachi three phases, 4-pole squirrel-cage motor.
Note 2) Select breakers that have proper capacity (Use breakers that comply with inverters). Select above proper ELB capacity following above table for the 1 pc inverter. 1 pc inverter must be supplied by the above proper 1 pc ELB.
Note 3) If the power line exceeds 20 m, cable that is thicker than the specified applicable cable must be used for the power line.
Note 4) Use copper electric wire (HIV cable) of which the maximum allowable temperature of the insulation is 75 °C.
Note 5) Use earth-leakage breakers (ELB) to ensure safety.
Note 6) To comply UL, please refer to section “1.3 Precautions Concerning Compliance with UL and cUL Standards”.
Note 7) The ground or earthed line should be a larger gauge than electric supply wire diameter used in the power line.
Note 8) The "**" part depends on the option equipment and destination.

5.6 Wiring of the control circuit

(1) Wiring instructions

1) Terminals L and CM2 are common to I/O signals and isolated from each other.
   Do not connect these common terminals to each other or ground them.
   Do not ground these terminals via any external devices. (Check that the external devices connected to these terminals are not grounded.)
2) Use a shielded, twisted-pair cable (recommended gauge: 0.14 to 0.75 mm^2) for connection to control terminals, and connect the cable insulation to the corresponding common terminal.
3) The length of cables connected to control terminals must be 20 m or less.
4) Separate the control circuit wiring from the main circuit wiring (power line) and relay control circuit wiring. If it is unavoidable to cross, cross each line at a right angle. Otherwise, the inverter may malfunction.
5) When connecting a contact to a control terminal (e.g., an intelligent input terminal), use a relay contact (e.g., crossbar twin contact) in which even a very low current or voltage will not trigger any contact fault.
6) When connecting an input coil of relay to an intelligent output terminal, also connect a surge-absorbing diode in parallel with the relay (refer to next page).
7) Do not connect analog power supply terminals H and L or interface power supply terminals P24 and L to each other. Otherwise, the inverter may fail.
8) There are two rows of control terminal blocks, one above the other, but if the upper terminal is wired first, it will be difficult to wire the lower terminal, so wire the lower terminal first.
9) After wiring, gently pull the wire, please make lead wire have securely connected.
10) Make sure that the wires are not shorted each other.

(2) Layout of control terminal

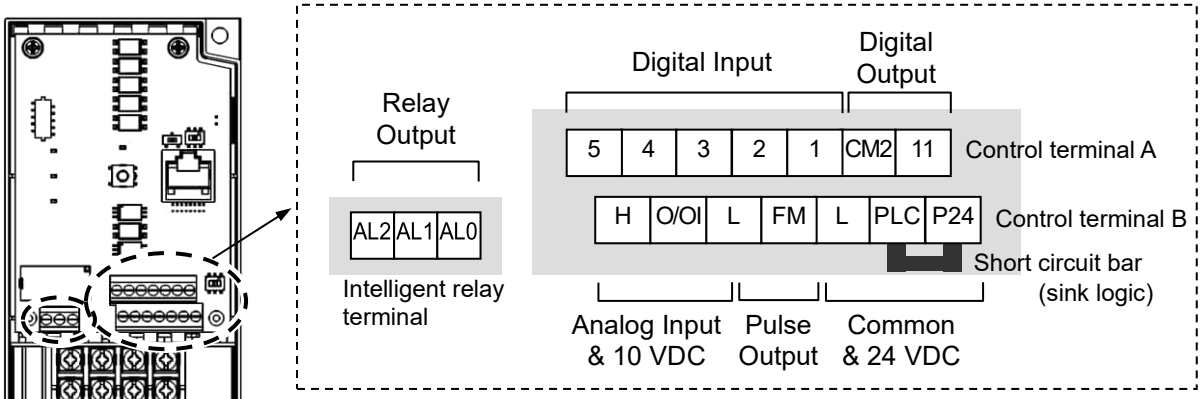

terminal	Screw diameter	Tightening torque
Control terminal A,B	M2	0.2 N･m
Intelligent relay terminal	M2	0.2 N･m

[example] (sink logic)

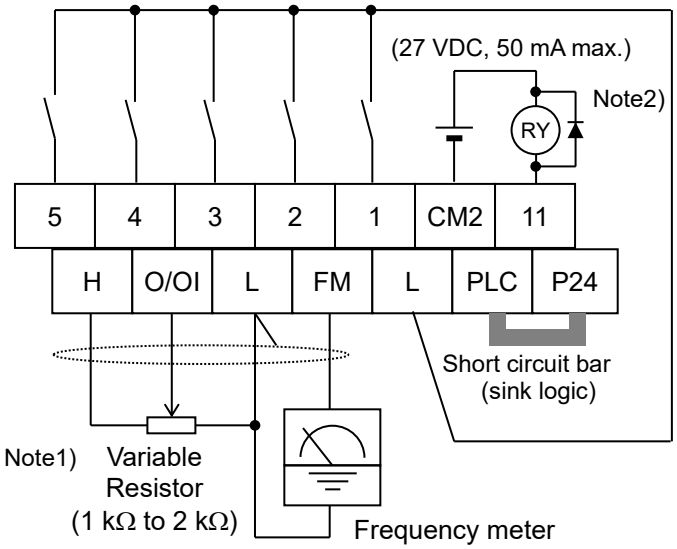

Note1) The above is a method to perform analog input (O/OI) by voltage input. It is necessary for SW6 on the board to be set for voltage input (default). (Refer to section “5.4 Wiring and terminal description (3) Changeover switch description”.)
In addition, the remote operator or NES1-OP is required to make adjust.

Note2) If you want to connect a relay to an intelligent output terminal, please connect a surge absorbing diode in parallel with the relay. The output circuit may malfunction by voltage surge.

(3) Switching the input control logic

- Sink logic and source logic can be selected.
  To switch the input control logic to the source logic, remove the short circuit bar connecting terminals P24 and PLC on the control terminal B, and then connect terminals PLC and L with the short circuit bar.

1) Sink logic

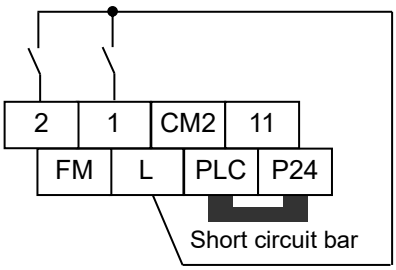

2) Source logic

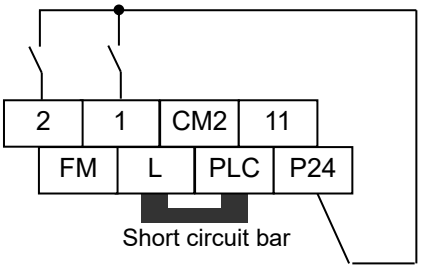

5.7 Connection with the programmable controller (PLC)

(1) Connecting a programmable controller to intelligent input terminals

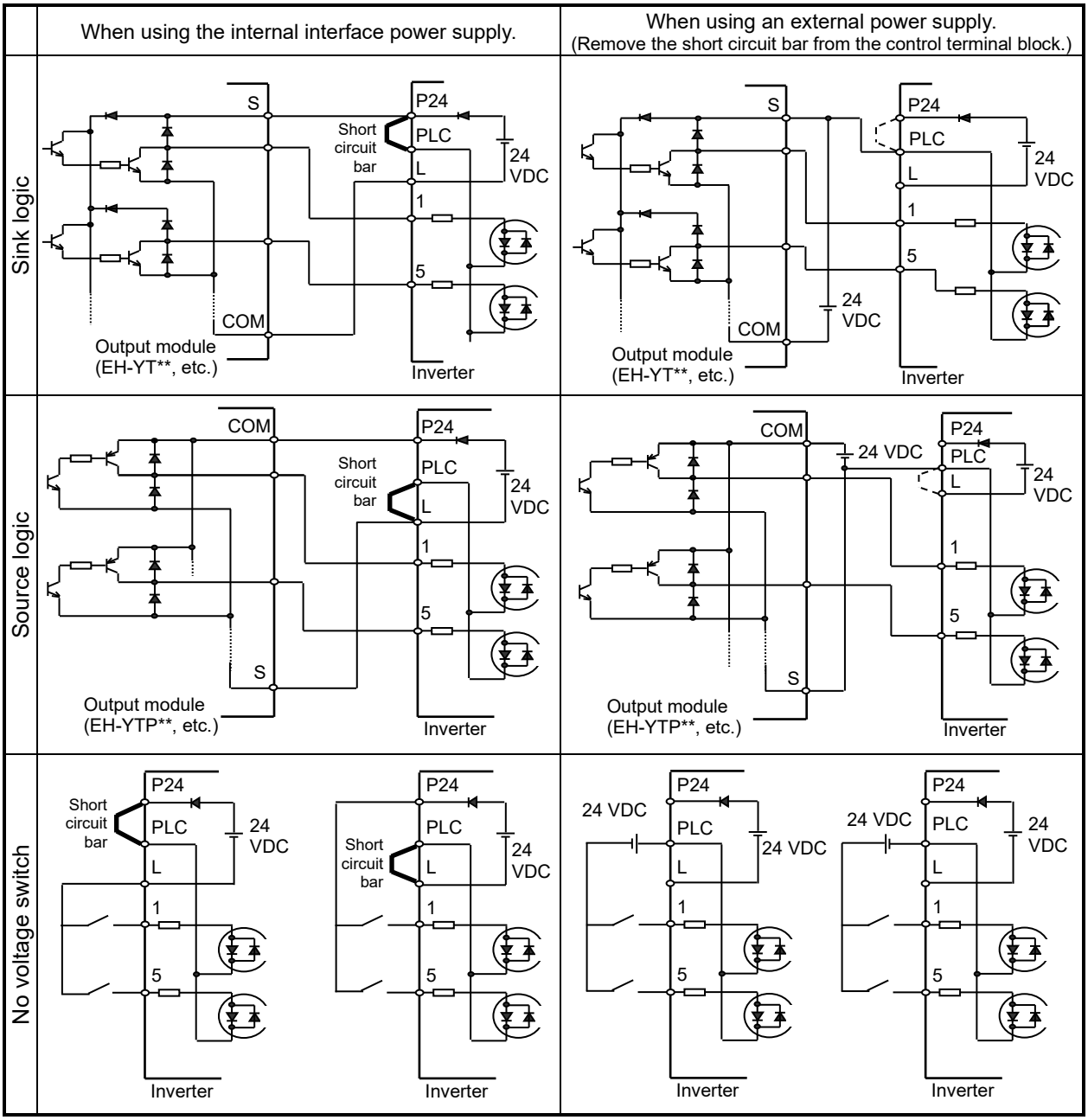

(2) Connecting a programmable controller to intelligent output terminal

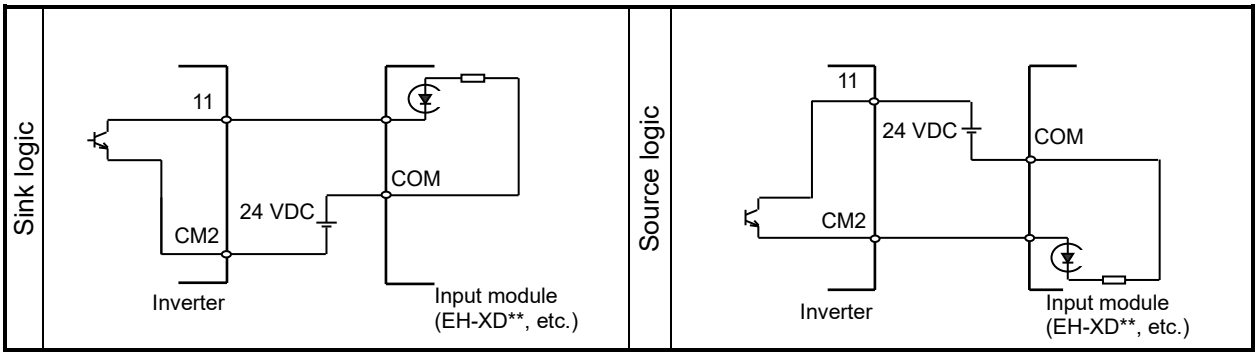

5.8 Notes on using multiple inverters

A plurality of inverter uses the common input and when inverter is timing of different power-on, as shown in the figure below the current flowing around. The input may be recognized as ON despite OFF. In this case, please put a diode (rated 50 V / 0.1 A) as shown in the figure to prevent unintended ON.

(1) Sink logic

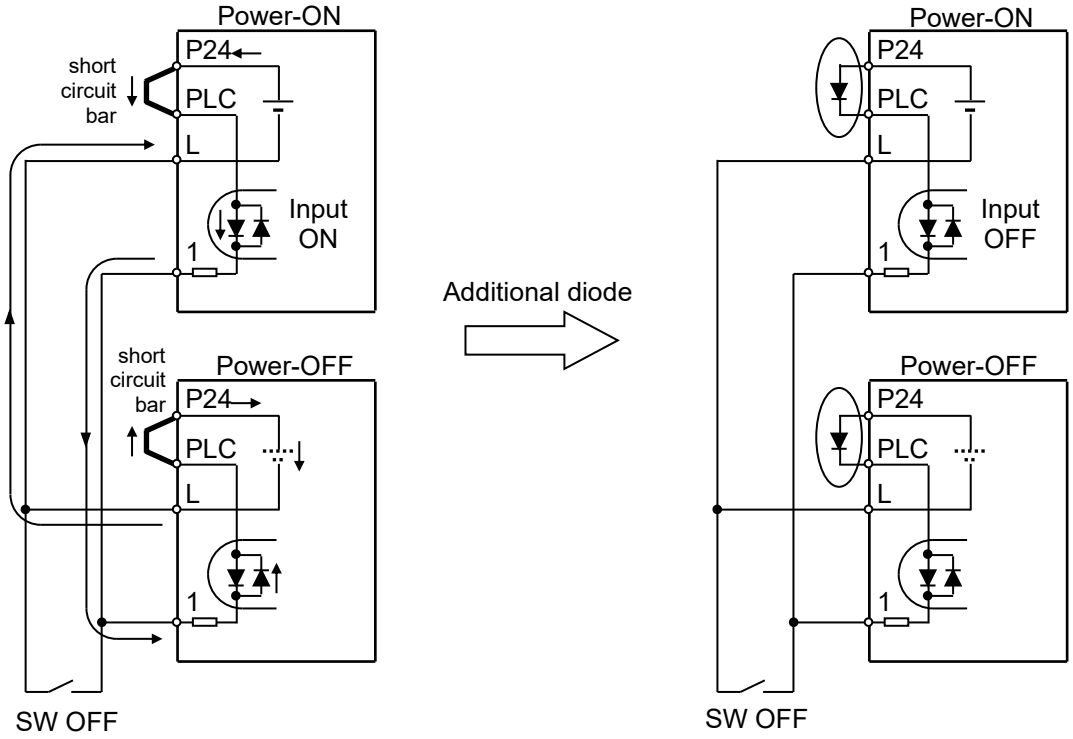

The input is recognized as ON in spite of OFF without diode.

Providing a diode instead of the short circuit bar, so that the unintended current flowing is prevented.

(2) Source logic

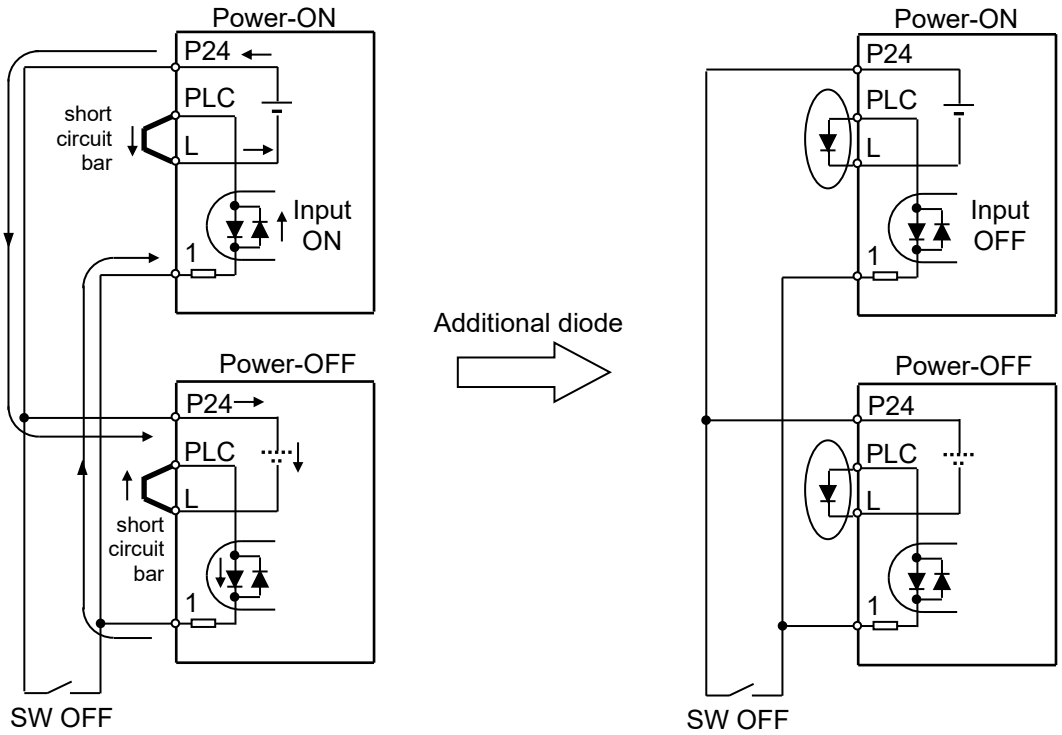

The input is recognized as ON despite OFF without diode.

Providing a diode instead of the short circuit bar, so that the unintended current flowing is prevented.

Chapter 6 Operation

This chapter describes typical methods of operating the inverter, how to operate the digital operator.

6.1 Precautions of Operation ·····6 - 3

6.2 Confirmation before power up the inverter ·····6 - 4

6.3 Changing parameters·····6 - 4

6.4 Power up the inverter·····6 - 5

6.5 How To Operate the Inverter·····6 - 6

6.6 Motor Operation·····6 - 12

6.7 Test Run with the motor·····6 - 17

6.8 When tripping occurs ·····6 - 19

(Memo)

6.1 Precautions of Operation

WARNING

- Please do not rotate suddenly. Check the direction of rotation at low frequencies. Otherwise, there is a danger of injury.
- While power is supplied to the inverter, do not touch any terminal or internal part of the inverter, check signals, or connect or disconnect any wire or connector. Otherwise, you run the risk of electric shock or fire.
- Be sure to close the front cover before turning on the inverter power. Do not open the front cover while power is being supplied to the inverter or voltage remains inside. Otherwise, you run the risk of electric shock.
- Do not operate switches with wet hands. Otherwise, you run the risk of electric shock.
- While power is supplied to the inverter, do not touch the terminal of the inverter, even if it has stopped. Otherwise, you run the risk of injury or fire.
- If the retry mode has been selected, the inverter will restart suddenly after a break in the tripping status. Stay away from the machine controlled by the inverter when the inverter is under such circumstances. (Design the machine so that human safety can be ensured, even when the inverter restarts suddenly.) Otherwise, you run the risk of injury.
- Do not select the retry mode for controlling an elevating or traveling device because output free-running status occurs in retry mode. Otherwise, you run the risk of injury or damage to the machine controlled by the inverter.
- If an operation command has been input to the inverter before a short-term power failure, the inverter may restart operation after the power recovery. If such a restart may put persons in danger, design a control circuit that disables the inverter from restarting after power recovery. Otherwise, you run the risk of injury.
- Prepare the additional emergency stop switch in addition to the stop key of the integrated operator and/or the optional operator. Otherwise, there is a danger of injury.
- If an operation command has been input to the inverter before the inverter enters alarm status, the inverter will restart suddenly when the alarm status is reset. Before resetting the alarm status, make sure that no operation command has been input. Otherwise, there is a danger of injury.
- While power is supplied to the inverter, do not touch any internal part of the inverter, or insert a bar in it. Otherwise, you run the risk of electric shock or fire.
- Run/Stop/Reset are integrated in one key on the standard panel. Therefore, before you press the key, please make sure that the machine (facility) can be operated. Otherwise, you run the risk of injury or damage to the machine controlled by the inverter.

CAUTION

- Do not touch the heatsink, which heats up during the inverter operation. Otherwise, you run the risk of burn injury.
- The inverter allows you to easily control the speed of motor or machine operations. Before operating the inverter, confirm the capacity and ratings of the motor or machine controlled by the inverter. Otherwise, you run the risk of injury or damage to the machine controlled by the inverter.
- Install an external brake system if needed. Otherwise, you run the risk of injury.
- When using the inverter to operate a standard motor at a frequency of over 60 Hz, check the allowable motor speeds with the manufacturers of the motor and the machine to be driven and obtain their consent before starting inverter operation. Otherwise, you run the risk of injury or damage to the motor and machine.
- During inverter operation, check the motor for the direction of rotation, abnormal sound, and vibrations. Otherwise, you run the risk of injury or damage to the machine driven by the motor.
- Regardless Run command source (A002/A202) if the RUN/STOP/RESET key is pressed, the inverter starts running. Therefore, if you have selected Run command such as operator or terminal, please handle the RUN/STOP/RESET key after you made sure that the machine/facility can be operated safety.

6.2 Confirmation before power up the inverter

Please confirm the followings before operation.

(1) Connection of the power input (R(L1)/L1, S(L2), T(L3)/N) and inverter output (U(T1), V(T2), W(T3)) is correctly connected. Otherwise, there is a risk of inverter failure.
(2) There must be no mis-connection of the control wiring. Otherwise, there is a risk of inverter failure.
(3) Earth grounding is properly connected. Otherwise, there is a risk of electric shock.
(4) There must be no terminals connecting to ground other than the ground terminal is grounded. Otherwise, there is a risk of inverter malfunction.
(5) There must be no short circuit by the wire clip etc. There must be no tools left inside the inverter. Otherwise, there is a risk of inverter failure.
(6) There must be no short circuit or ground fault at the output side. Otherwise, there is a risk of inverter failure.
(7) Front cover must be closed. When using the RS422/RS485 port, please open the window for connecting RS422/RS485 of the standard panel. Otherwise, there is a risk of electric shock.

6.3 Changing parameters

One of the following is required when changing parameters on NE-S1 series inverters.

(1) Dedicated operator (NES1-OP)
The dedicated operator (NES1-OP) is used with integration onto the inverter. It is not possible to use the operator external with cable.

(2) Digital operator (OPE-SRmini,OPE-S/SR/SBK, SOP, SOP-VR)
Digital operator can be used with connector cable (ICS-1,3) and connected to the RS422/RS485 port (RJ45) in the inverter. Turn the changeover switch SW5 to the operator side (OFF side) in that case (refer to “3.2 Name of each portion (removing the front cover)”). Refer to the manual for each operator for the detailed information.

(3) 5-line LCD operator (WOP)
WOP having serial number of “16918938000081” or later (2011/07 production) are applied to NE-S1 series inverter (English only).
WOP can be used with connector cable (ICS-1,3) and connected to the RS422/RS485 port (RJ45) in the inverter. Turn the changeover switch SW5 to the operator side (OFF side) in that case (refer to “3.2 Name of each portion (removing the front cover)”). Refer to the WOP manual for the detailed information.

(4) Inverter setting software (ProDriveNext)
ProDriveNext Version “Hitachi Inverter Tool 1.2.33.010” and later are applied to the NE-S1 series inverter. ProDriveNext Version “Hitachi Inverter Tool 2.2.6.2” and later are applied to the NE-S1 Ver.2.0 series inverter.
PC can be used with USB/RS422 conversion cable and connected to the RS422/RS485 port (RJ45) in the inverter. Turn the changeover switch SW5 to the operator side (OFF side) in that case (refer to “3.2 Name of each portion (removing the front cover)”). Refer to the manual for ProDriveNext for the detailed information.

It is necessary to turn power off to store the changed data.

6.4 Power up the inverter

(1) Power up the inverter after confirming the items shown in above section “6.2 Confirmation before power up the inverter”.

(2) Confirm the LED is emitting like shown below.
- Standard panel : Confirm that both POWER LED and Key valid lamp are emitting.
- Dedicated operator (NES1-OP) : Confirm that the 7-SEG LED is emitting. Display will be the one set by b038 (Initial display selection). “0.00 (output frequency monitoring: d001)” will be displayed under default condition.

(3) Refer to section “6.5 How To Operate the Inverter” and set required parameters. And then refer to section “6.6 Motor operation”.

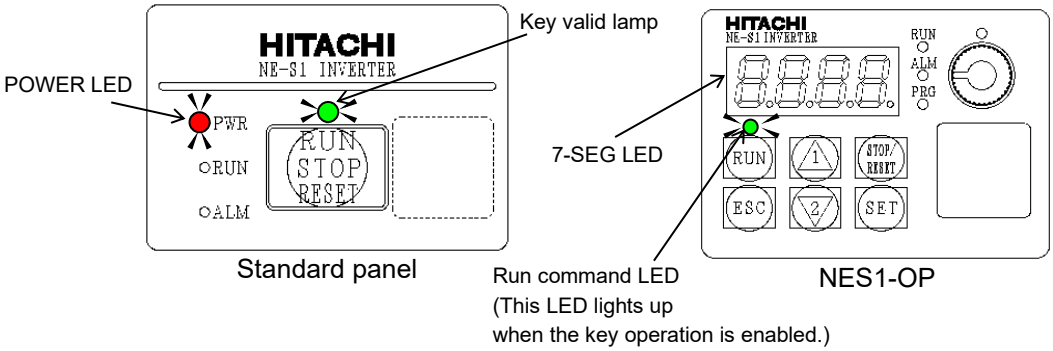

Note) It will take around 1.5 seconds for the inverter to be ready (each LED emits). This time is required for immediate operation after the inverter is turned on.

6.5 How To Operate the Inverter

(A) Names and functions of standard panel

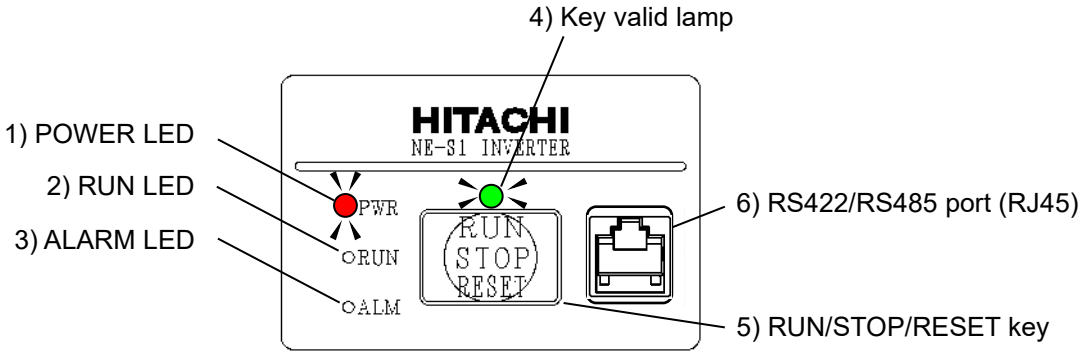

Name	Description
1) POWER LED	- Turns ON (red) during the inverter is powered up.
2) RUN LED	- Turns ON (green) during inverter operation. This turns ON either RUN command is given, or the inverter is giving out power. Therefore, it keeps turning ON during 0 Hz driving, or keeps turning ON during deceleration period even after the RUN command is OFF.
3) ALARM LED	- Turns ON (red) when the inverter is in trip status. - Refer to section “6.8 When tripping occurs”, how to reset the trip status.
4) Key valid lamp	- Turns ON (green) when the RUN/STOP/RESET is ready. It turns off when there is a RUN command. If the RUN command is being given from the RUN/STOP/RESET key, the lamp is being on during deceleration period even after the RUN command is OFF. While RUN command is given such as FW(RV) terminal, if "RUN/STOP/RESET key" was pressed, even RUN command is OFF, the "Key valid lamp" is OFF until inverter is stopped.
5) RUN/STOP/RESET key	- Makes inverter run, stop, and reset. RUN/STOP/RESET key is set valid in default settings and it can be made invalid by the button sensitivity selection (C151) to “no”. - Makes inverter restore from the trip state if the inverter is in trip state. - If the Modbus communication mode is selected, it can be temporary changed to a remote operator mode if the inverter is powered up with pressing the RUN/STOP/RESET key and keep it pressing 5 seconds, and take off from the key. Changeover switch must be changed later. Note 1)
6) RS422/RS485 port (RJ45) Note2)	- This is a port for remote operator, Modbus communication, or ProDriveNext (RS485/ operator changeover switch SW5 must be operated before power ON). In case of Modbus communication, it is necessary to set the changeover switch and parameter (C070). Display of NES1-OP will be according to the parameter set of “b150” continuously, if the external operator is connected while the dedicated operator (NES1-OP) is integrated.

Note 1) It is necessary to set changeover switch SW5 and the parameter “C070” for releasing the Modbus communication. If the parameter “C070” is set to “01(Modbus)”, remote operator via the RS422/RS485 port (RJ45) cannot be used.

Note 2) Connecting to the RS422/485 port (RJ45) must be done during the inverter power off.

(B) Names and functions of dedicated operator (NES1-OP)
(*same applies to digital operator (OPE-S/SR/SBK, OPE-SRmini, SOP, SOP-VR).)

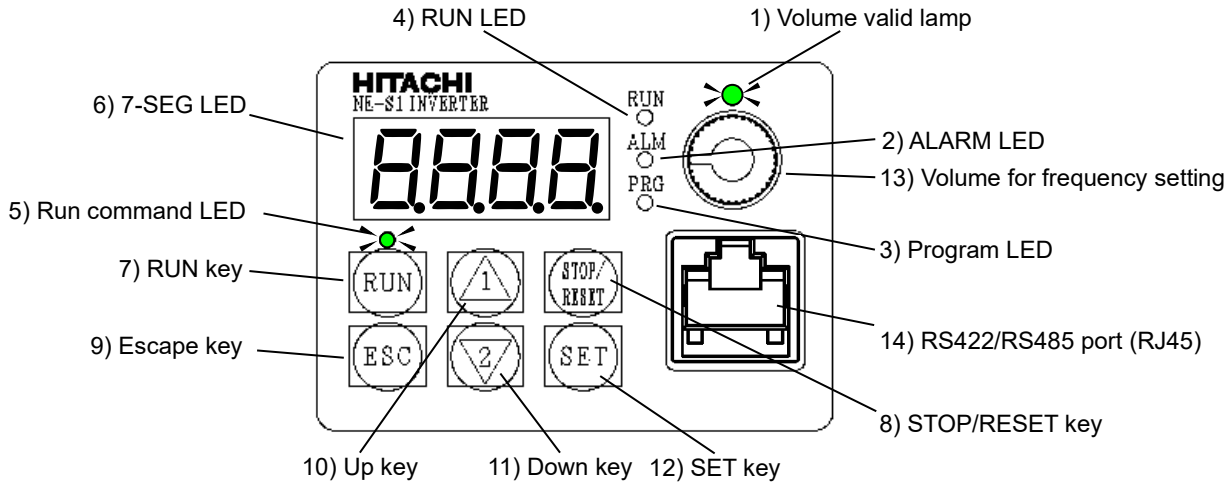

Name	Description
1) Volume valid lamp	- Turns ON (Green) when the frequency source (A001/A201) is set to “00 (VR)”. (The frequency setting volume of the operator is active).
2) ALARM LED	- Turns ON (Red) when the inverter is in trip status. - Refer to section “6.8 When tripping occurs”, how to reset the trip status.
3) Program LED	- Turns ON (Green) when the display shows changeable parameter. - Blinks when there is a mismatch in setting. Refer to section “9.3 Warning Codes for Digital operator”.
4) RUN LED	- Turns ON (Green) when the inverter is driving the motor. (RUN LED is lit even when the set frequency is put in operation command 0 Hz or during deceleration after the operation command OFF.)
5) RUN command LED	- Turns ON (Green) when a run command source (A002/A202) is set to “02 (Operator)”. (Run key is effective.)
6) 7-SEG LED	- Shows each parameter, monitors etc. LED color is red.
7) RUN key	- Makes inverter run. (Run command source (A002/A202) is need to set “02 (Operator)”.) - Set the operation direction in RUN key routing (F004).
8) STOP/RESET key	- Makes inverter decelerates to a stop. (Even if run command source (A002/A202) is not set to “02 (Operator)”, STOP/RESET key is valid at the factory setting. STOP/RESET key can be disabled in the STOP/RESET key enable (b087) setting.) - Resets the inverter when it is in trip status.
9) Escape key	- Goes to the top of next function group when a function mode is shown. - Cancels the setting and returns to the function code when a data is shown. - Moves the cursor to a digit left when inverter is in single-digit edit mode. - Pressing this key for 1 second leads to display data of d001, regardless of current display.
10) Up key 11) Down key	- Increase or decrease the data. Scroll speed is accelerated by holding down a key. - Pressing the both keys at the same time gives you the single-digit edit mode.
12) SET key	- Goes to the data display mode when a function code is shown. - Sets the data and goes back to show the function code when data is shown. - Moves the cursor to a digit right when inverter is in single-digit edit mode.
13) Volume for frequency setting	- This is a volume for frequency setting. This volume is valid when the frequency source (A001/A201) is set to “00 (VR)”.
14) RS422/RS485 port (RJ45) Note1)	- This is a port for remote operator, Modbus connection, or ProDriveNext (RS485 / operator changeover switch SW5 must be operated before power ON). In case of Modbus communication, it is necessary to set the changeover switch SW5 and parameter (C070). Display of NES1-OP will be according to the parameter setting of “b150“ continuously, if the remote operator is connected while the dedicated operator (NES1-OP) is integrated.

Note 1) Connecting to the RS422/485 port (RJ45) must be done during the inverter power off.

(C) Key operations

This section shows the key operations of the digital operator and dedicated operator (NES1-OP).

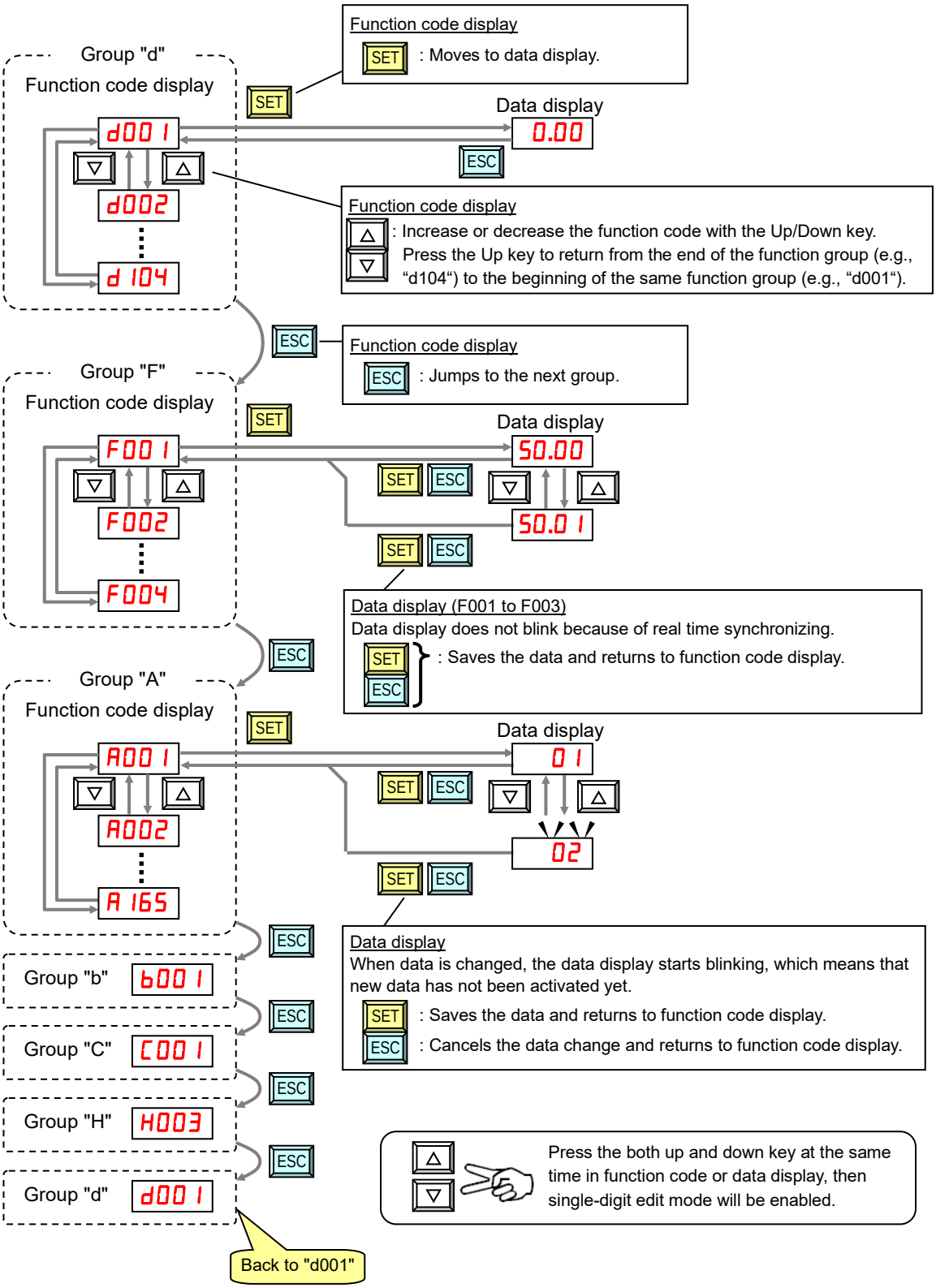

Note) Pressing the Escape key will make the display go to the top of next function group, regardless the display contents (e.g., A021 → [ESC] → b001).

[Single-Digit Edit Mode]

If a target function code or data is far from current data, using the single-digit edit mode makes setting quicker. Pressing the up key and down key at the same time leads you to go into the single-digit edit mode.

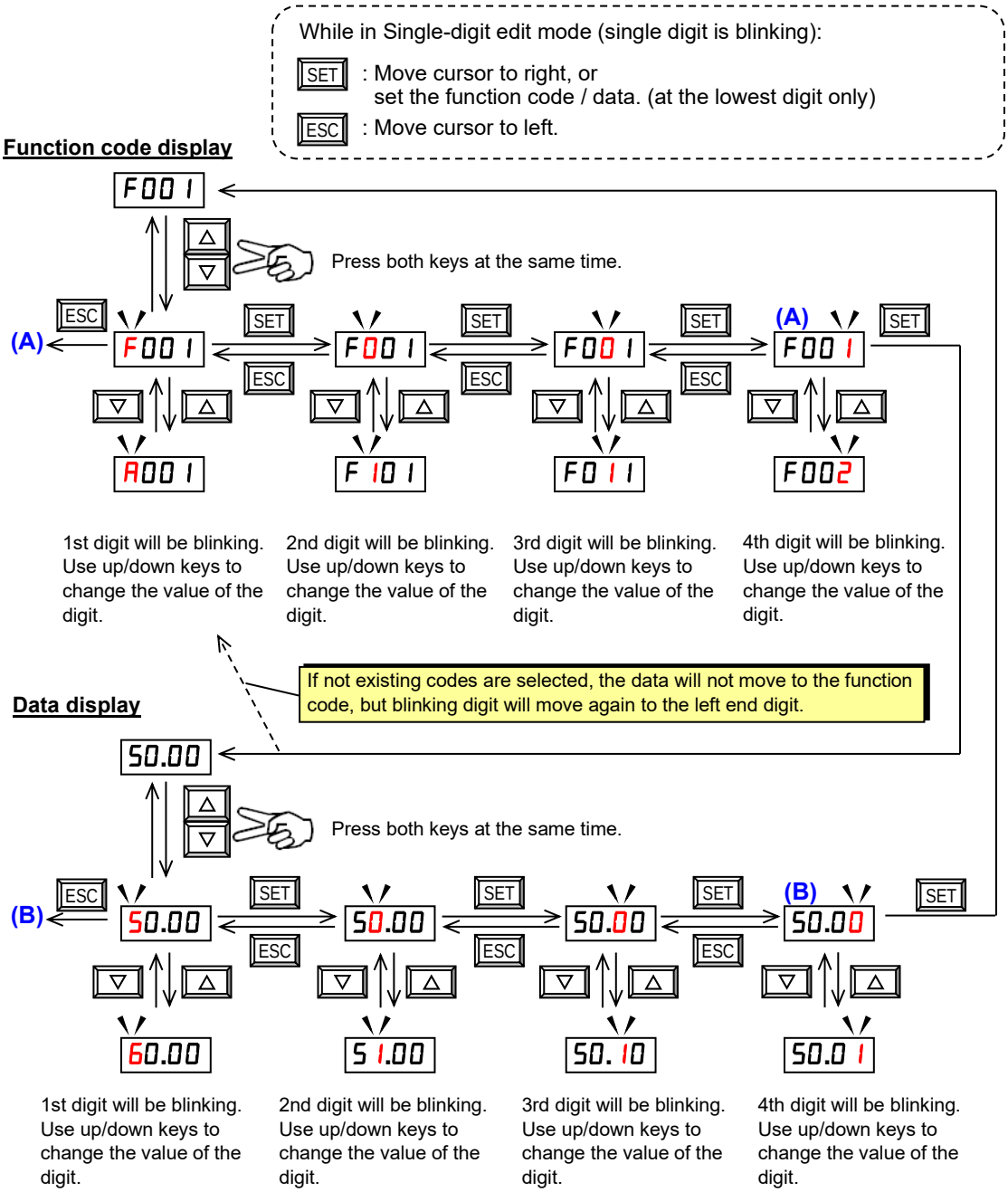

Note1) When pressing Escape key with cursor on the highest digit, the cursor will jump to the lowest digit. ((A) and (B) in above figure.)

Note2) When pressing up key and down key at the same time in single-digit edit mode, the single-digit edit mode is disabled and goes back to normal mode.

[Setting example]

After power ON, changing from "0.00" display to the "b083" (carrier frequency) data.

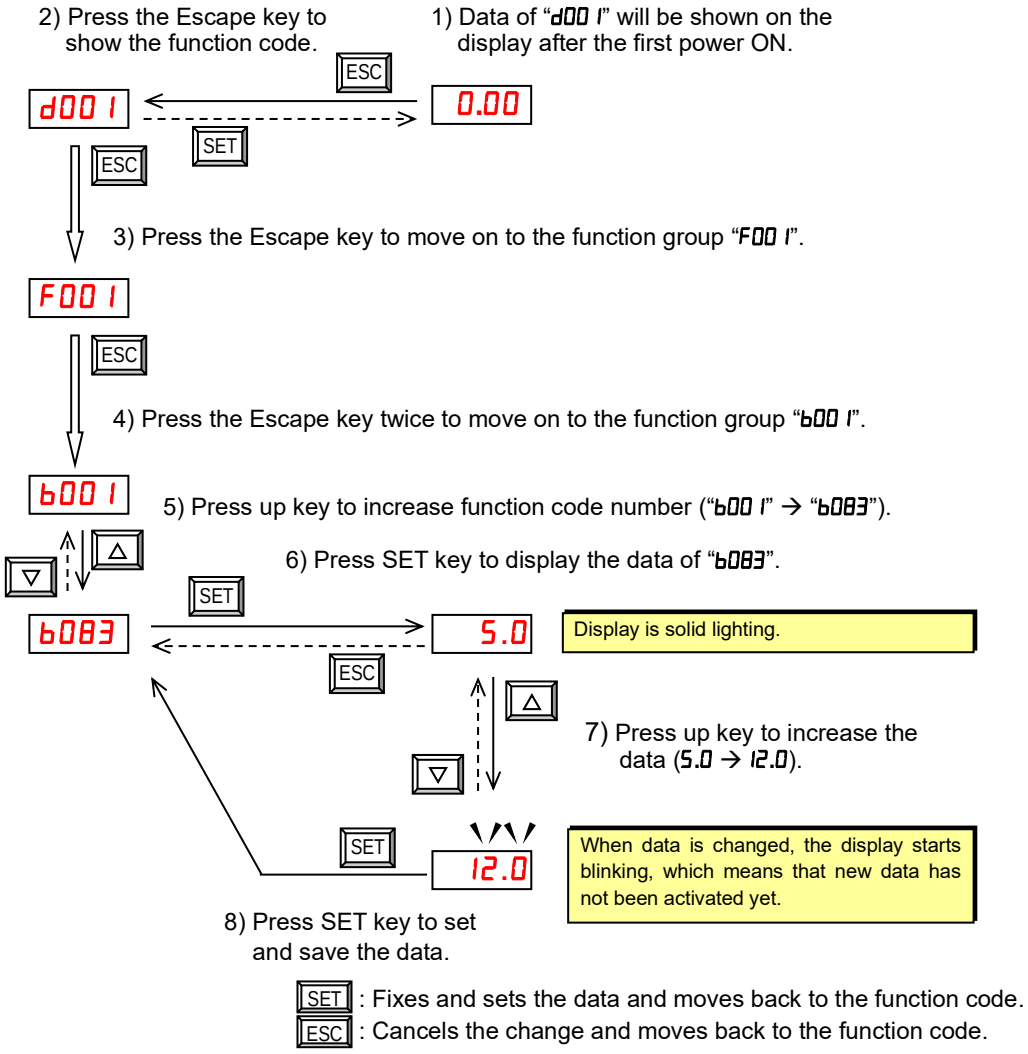

Note1) Function codes "**dxxx**" are for monitor and not possible to change.
Function codes "**Fxxx**" other than "F004" are reflected on the performance just after changing the data (before pressing SET key), and there will be no blinking.

Note2) Keep pressing the Escape key for more than 1 second leads to "d001" display, regardless the display situation. But note that the display will circulates while keep pressing the Escape key because of the original function of the key.
(e.g., "F001"→ "A001" → "b001" → "C001" → …→ displays "0.00" (data of "d001") after 1 second.)

NES1-OP
Key position

RUN	△	STOP
ESC	▽	SET

	When a function code is shown…	When a data is shown…
ESC key	Moves on to the next function group.	Cancels the change and moves back to the function code.
SET key	Moves on to the data display.	Fixes and sets the data and moves back to the function code.
△ key	Increases function code.	Increases data value.
▽ key	Decreases function code.	Decreases data value.
▽ + △ keys	Goes into the single-digit edit mode.	Goes into the single-digit edit mode.

[Connection of the operator for another model]

NE-S1 series inverter can be operated by using the remote operator (OPE-S/SR/SBK, OPE-SRmini, SOP, SOP-VR, WOP). Transition from the function code display to the data display is activated by the STR key, not the FUNC key. Notice that pressing the FUNC key is moved to the next function group, when remote operator is showing the function code display. Remote operator displays the “d001” when it holds down a FUNC key for over a second even any state.

(Example) NE-S1 series inverter and OPE-SRmini combination

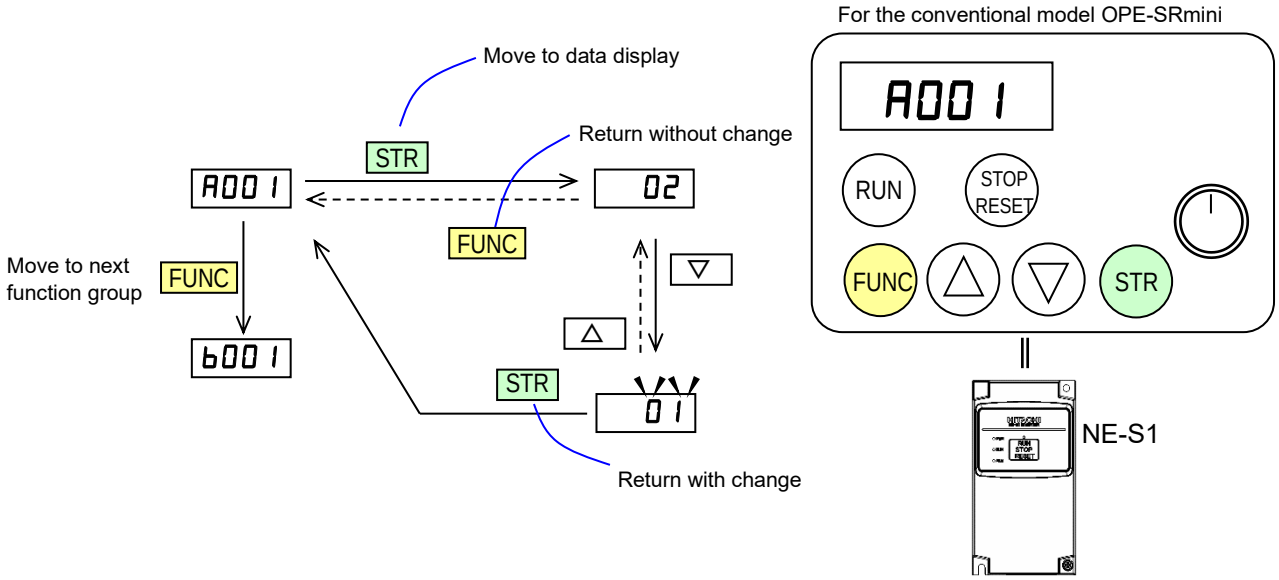

(Reference) Conventional inverter model and OPE-SRmini combination

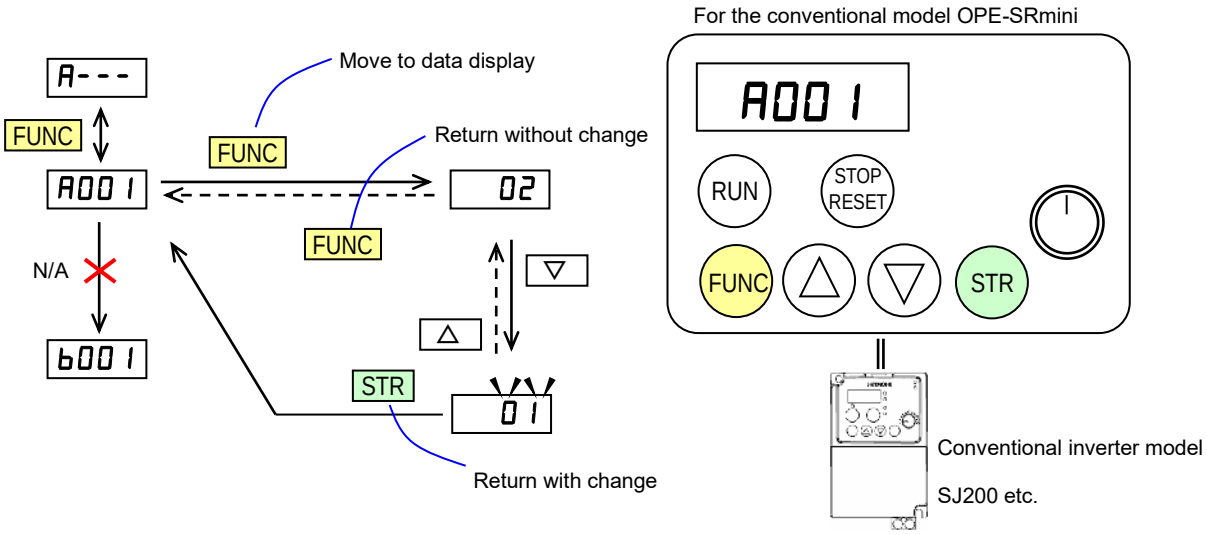

6.6 Motor Operation

Both “Run command” and “frequency command” is necessary to run the motor. Motor does not run if one of each is missing. For example, motor will not run when the run command is given but the frequency command is 0 Hz. Additionally, the motor will not run if FRS (free run stop) signal (and the like) is being given.
NE-S1 series inverter has following way to set the run command and frequency command.
(These are examples of sink logic and uses internal control power supply.)

(A) Driving with the standard panel

RUN/STOP/RESET key on the standard panel is effective regardless of the setting of the run command source (A002/A202). Thus, following driving method (1) to (3) are possible without an option if an inverter is factory default setting.

(1) Method to perform driving in RUN/STOP/RESET key and perform frequency setting in multi-speed select

This is the operation method when run command is given by "RUN/STOP/RESET key", frequency command is given by fixed value such as 20/40/60 Hz and acceleration & deceleration times are 10 seconds. (If you do not need to change such as acceleration & deceleration times, an optional operator is not required.)
To set the frequency command, use the multi-speed frequency setting (speed 1=60.00 Hz, speed 2=40.00 Hz, speed 3=20.00 Hz).

■ Setup

Function Name	Code	Data	Note
Intelligent input [3] function	C003	02 (CF1)	Default
Intelligent input [4] function	C004	03 (CF2)	

The initial value of acceleration / deceleration time is 10 seconds.
Please change the following parameters as needed.

Function Name	Code	Setting Range	Note
Acceleration time (1)	F002	0.00 to 3600.00 sec.	Default: 10.00 sec.
Deceleration time (1)	F003	0.00 to 3600.00 sec.	Default: 10.00 sec.

* One of the following is required when changing parameters on NE-S1 series inverters.
a) Dedicated operator (NES1-OP), b) Digital operator, c) WOP,
d) Modbus communication, e) Inverter setting software (ProDriveNext)

■ Control circuit terminals wiring (Sink logic)

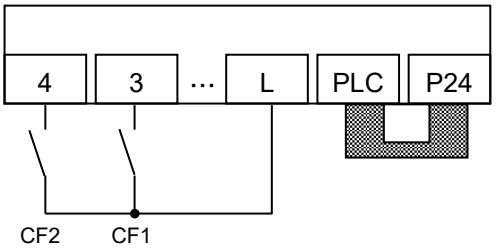

■ Example of multi-speed (default)

Intelligent input terminal [4]	Intelligent input terminal [3]	Code	Restricted Distribution Other (Standard)	Restricted Distribution China / Europe
OFF	ON	A021 (multi-speed frequency 1)	60.00 Hz command	50.00 Hz command
ON	OFF	A022 (multi-speed frequency 2)	40.00 Hz command	35.00 Hz command
ON	ON	A023 (multi-speed frequency 3)	20.00 Hz command	20.00 Hz command

(2) Method to perform driving in RUN/STOP/RESET key and perform frequency setting in volume resistor

This is the operation method when run command is given by "RUN/STOP/RESET key", frequency command is given by analog input such as O-L voltage and acceleration & deceleration times are 10 seconds. (If you do not need to change such as acceleration & deceleration times, an optional operator is not required.)
Below diagram is to set the external frequency setting by connecting H-O-L volume to supply O-L voltage.

■ Setup

Function Name	Code	Data	Note
Frequency source	A001	01 (Control terminal)	Default

The initial value of acceleration / deceleration time is 10 seconds.
Please change the following parameters as needed.

Function Name	Code	Setting Range	Note
Acceleration time (1)	F002	0.00 to 3600.00 sec.	Default: 10.00 sec.
Deceleration time (1)	F003	0.00 to 3600.00 sec.	Default: 10.00 sec.

* One of the following is required when changing parameters on NE-S1 series inverters.
a) Dedicated operator (NES1-OP), b) Digital operator, c) WOP,
d) Modbus communication, e) Inverter setting software (ProDriveNext)

■ Control circuit terminals wiring (Sink logic)

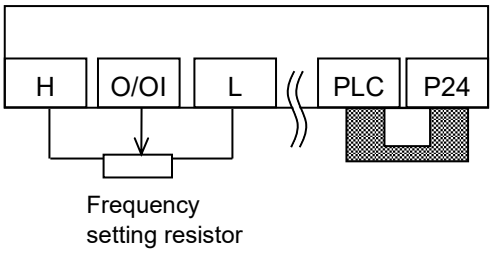

Note)
The above is a method to perform analog input (O/OI) by voltage input. It is necessary for SW6 on the board to be set for voltage input (default). (Refer to 5 - 8 page.)

(3) Method to perform driving in FW/RV terminal and perform frequency setting in volume resistor

This is the operation method when run command is given by intelligent input terminal such as FW (RV) function and frequency command is given by analog input such as O-L voltage and acceleration & deceleration times are 10 seconds. (If you do not need to change such as acceleration & deceleration times, an optional operator is not required.)
Below diagram is to set the external frequency setting by connecting H-O-L volume to supply O-L voltage.

■ Setup

Function Name	Code	Data	Note
Frequency source	A001	01 (Control terminal)	Default
Run command source	A002	01 (Control terminal)	Default
Intelligent input [1] function	C001	00 (FW)	Default
Intelligent input [2] function	C002	01 (RV)	

The initial value of acceleration / deceleration time is 10 seconds.
Please change the following parameters as needed.

Function Name	Code	Setting Range	Note
Acceleration time (1)	F002	0.00 to 3600.00 sec.	Default: 10.00 sec.
Deceleration time (1)	F003	0.00 to 3600.00 sec.	Default: 10.00 sec.

* One of the following is required when changing parameters on NE-S1 series inverters.
a) Dedicated operator (NES1-OP), b) Digital operator, c) WOP,
d) Modbus communication, e) Inverter setting software (ProDriveNext)

■ Control circuit terminals wiring (Sink logic)

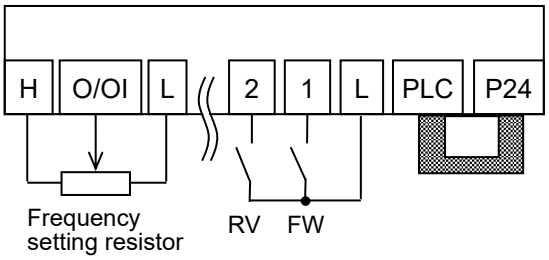

Note)
The above is a method to perform analog input (O/OI) by voltage input. It is necessary for SW6 on the board to be set for voltage input (default). (Refer to 5 - 8 page)

(B) Driving with the dedicated operator (NES1-OP)
(*same applies to digital operator (OPE-S/SR/SBK, OPE-SRmini, SOP, SOP-VR).)

(1) Method to perform driving and frequency setting in the operator (*Must be set by the operator)

How to drive by key operation of the dedicated operator (NES1-OP).

■ Setup

Function Name	Code	Data	Note
Frequency source	A001	02 (Operator)	
Run command source	A002	02 (Operator)	Run command LED lights up.
Output frequency setting	F001	0.00 to “A004“ Hz (“A004“: Maximum frequency)	Default: 0.00 Hz
RUN key routing	F004	00(Forward) / 01(Reverse)	Can not be changed during operation.

The initial value of acceleration and deceleration time is 10 seconds.
Please change the following parameters, as necessary.

Function Name	Code	Setting Range	Note
Acceleration time (1)	F002	0.00 to 3600. sec.	Default: 10.00 sec.
Deceleration time (1)	F003	0.00 to 3600. sec.	Default: 10.00 sec.

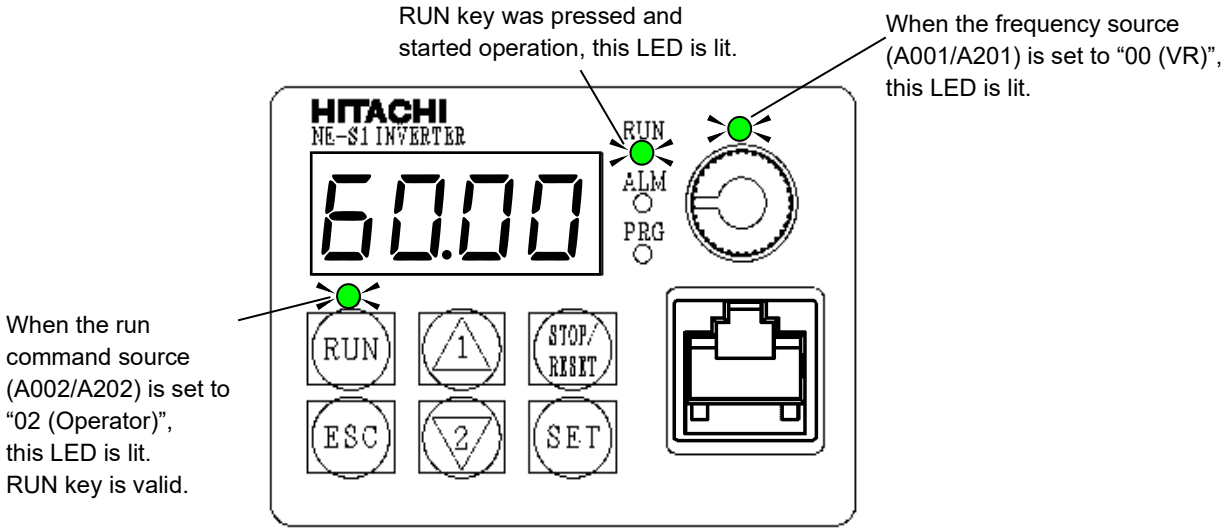

■ Control circuit terminals wiring
No connect

■ Operation
Please operate in accordance with section “6.7 Test Run with the motor”.

(2) Method to perform driving in 3-wire input and perform frequency setting in analog current (4 to 20mA)
(*Must be set by the operator)

■ Setup

Function Name	Code	Data	Note
Frequency source	A001	01 (Ccontrol terminal)	Default
Run command source	A002	01 (Ccontrol terminal)	Default
Intelligent input [1] function	C001	20 (STA: Starting the motor) *1	
Intelligent input [2] function	C002	21 (STP: Stopping the motor) *1	
Intelligent input [3] function	C003	22 (F/R: Switching the motor operation direction) *1	

*1 : Refer to section “7.5.3 3-wire input function (STA, STP, and F/R)” for details of 3-wire input mode.

The initial value of acceleration and deceleration time is 10 seconds.
Please change the following parameters, as necessary.

Function Name	Code	Setting Range	Note
Acceleration time (1)	F002	0.00 to 3600. seconds	Default: 10.00 seconds
Deceleration time (1)	F003	0.00 to 3600. seconds	Default: 10.00 seconds

It is necessary for SW6 on the board to be set for current input. (Refer to 5 - 8 page.)
When used with 4 to 20 mA, you need to change the following parameter.

Function Name	Code	Data	Note
[O/OI] input active range start ratio	A013	20. %	Default: 0. %

■ Control circuit terminals wiring (Sink logic)

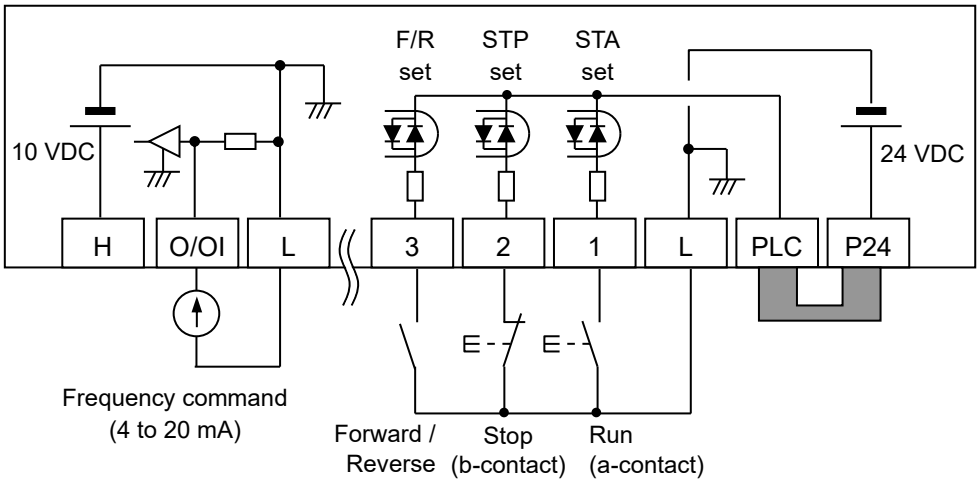

* This wiring diagram is an example of using the built-in power of the inverter.
Refer to Section “5.6 Wiring of the control circuit” when you use an external power supply.

■ Operation

Please operate in accordance with section “6.7 Test Run with the motor”.

6.7 Test Run with the motor

The following figure shows an example of basic connection. Please refer to section “6.6 Motor Operation” for how to wire for operation command and frequency command from the control terminal block. Please refer to section “6.5 How To Operate the Inverter” for how to operate the parameter settings. To set the parameter, an operator is required.

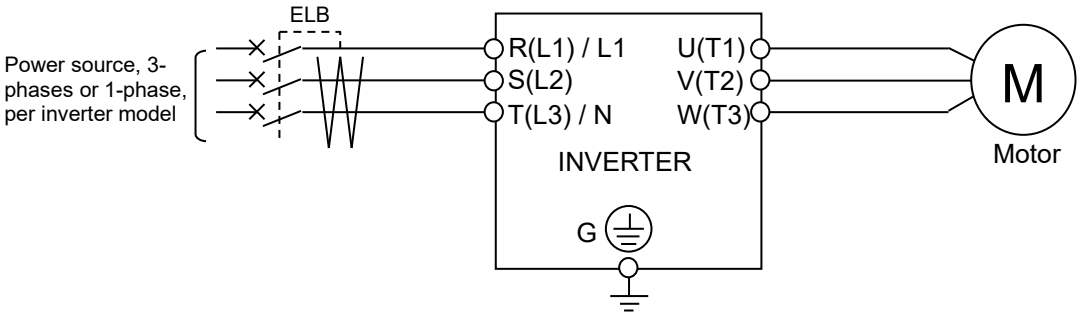

No.	Procedure
1	Please check whether there is any problem with the wiring.
2	Turn on the power to the inverter. The POWER LED (red) turns ON.
	In case of input operation command and frequency command without operator (Initial state at shipment). *1)
3	Turn on both intelligent input terminal 3,4 (CF1,CF2). (Multi-speed frequency 3: The initial value is set 20 Hz.)
4	Push the RUN/STOP/RESET key. The RUN LED turns ON.
5	Please check that there is no abnormality in the inverter, motor rotation direction and motor rotation speed. If the rotation direction of the motor is different, please turn off the inverter and check the charge lamp is OFF. Please replace the two phases of the three-phase wiring of the output.
6	If there are no problems, turn on intelligent input terminal 3 (CF1) only. (Multi-speed frequency 1 : The initial value is set 60 Hz.)
7	After checking the operation, push the RUN/STOP/RESET key. Motor starts to slow down. The RUN LED turns OFF when the motor is stopped.
	In case of input operation command and frequency command from control terminal block.
3	Please check that the O/OI input value (the frequency command) is zero. Then, turn ON either the intelligent input terminal 1 (FW) or intelligent input terminal 2 (RV). The RUN LED turns ON.
4	Increase the analog voltage / current (frequency command) gradually.
5	Please check that there is no abnormality in the inverter, motor rotation direction and motor rotation speed. If the rotation direction of the motor is different, please turn off the inverter and check the charge lamp is OFF. Please replace the two phases of the three-phase wiring of the output.
6	If there are no problems, increase the analog voltage / current gradually.
7	After checking the operation, turn OFF the intelligent input terminal that is turned ON at No.3 above. The RUN LED turns OFF when the motor is stopped.

	In case of input operation command and frequency command from operator. *1)
3	Set the frequency source (A001) to "02 (Operator)".
4	Set the run command source (A002) to "02 (Operator)".
5	Set the output frequency setting (F001). It is recommended to set slow (about 10 Hz) for the safety.
6	Set the RUN key routing (F004).
7	Set the output frequency monitoring (d001) to the monitor display on the operator, then press the SET key. Checking the "0.00 (Hz)".
8	Press the RUN key, then motor starts to rotate. And the RUN LED turns ON.
9	Please check that there is no abnormality in the inverter, motor rotation direction and motor rotation speed. For the rotation direction of the motor, refer to rotation direction monitoring (d003) display.
10	If there are no problems, increase the output frequency setting (F001) gradually.
11	After checking the operation, push the STOP key. Motor starts to slow down. The RUN LED turns OFF when the motor is stopped.
	In case of input operation command from operator and frequency command from operator's volume.
3	Set the frequency source (A001) to "00 (VR)". The volume valid lamp turns ON.
4	Set the run command source (A002) to "02 (Operator)".
5	To avoid sudden motor operation by pressing the RUN key, turn the operator's volume to the left full.
6	Set the RUN key routing (F004).
7	Press the RUN key, then the RUN LED turns ON.
8	Turn the operator's volume to the right gradually. The motor starts to rotate.
9	Please check that there is no abnormality in the inverter, motor rotation direction and motor rotation speed. For the rotation direction of the motor, refer to rotation direction monitoring (d003) display.
10	If there are no problems, turn the operator's volume to the right gradually. Then, the output frequency will be increase gradually.
11	After checking the operation, push the STOP key. Motor starts to slow down. The RUN LED turns OFF when the motor is stopped. Even if the operator's volume is turned to the left full, the motor will stop. But the operation command is kept in running and the RUN LED will not turn OFF.
12	To avoid sudden motor operation by pressing the RUN key on the next running, turn the operator's volume to the left full.

*1) "Operator" refers to dedicated operator (NES1-OP), digital operator (OPE-S/SR/SBK, OPE-SRmini, SOP, SOP-VR), WOP.

■ Point to be checked

- Check whether there is any trip in the middle of acceleration and deceleration. Check the frequency meter and the number of revolutions is correct.
- When an overcurrent trip or overvoltage trip occurs during the test run, please make sure of the input / output state of the inverter and the load condition, or please increase the length of the acceleration time (1) (F002) and deceleration time (1) (F003). To change the acceleration and deceleration time, an operator is required.
- Check the output current monitoring (d002), DC bus voltage monitoring (d102). Ensure that there is a margin to the value of the current and voltage trip. To check the monitor, an operator is required.

6.8 When tripping occurs

During operation, If any abnormalities (overcurrent, overload, etc.) is detected, and in order to protect the motor and inverter, the inverter output is shut off to the motor. At the same time, the ALARM LED lights up and blinks (please check the section "9.1 Indication of the error"). Then, the inverter displays an error code. This chain of operations is called the trip. Motor is in free-run mode due to trip. Please investigate the cause of the error from the error code and remove the cause of the error. During the trip, a run command is not accepted. Press the RUN/STOP/RESET key to cancel the trip. If reset is assigned to an intelligent input terminal, please reset input "ON to OFF". However, depending on the cause of trip may not be able to cancel the trip by reset. In this case, the power is turned off and turned on again. Before reset execution please review the various input signals such as operation command. Please note that If operation command signal remains ON, restart immediately after the reset operation.

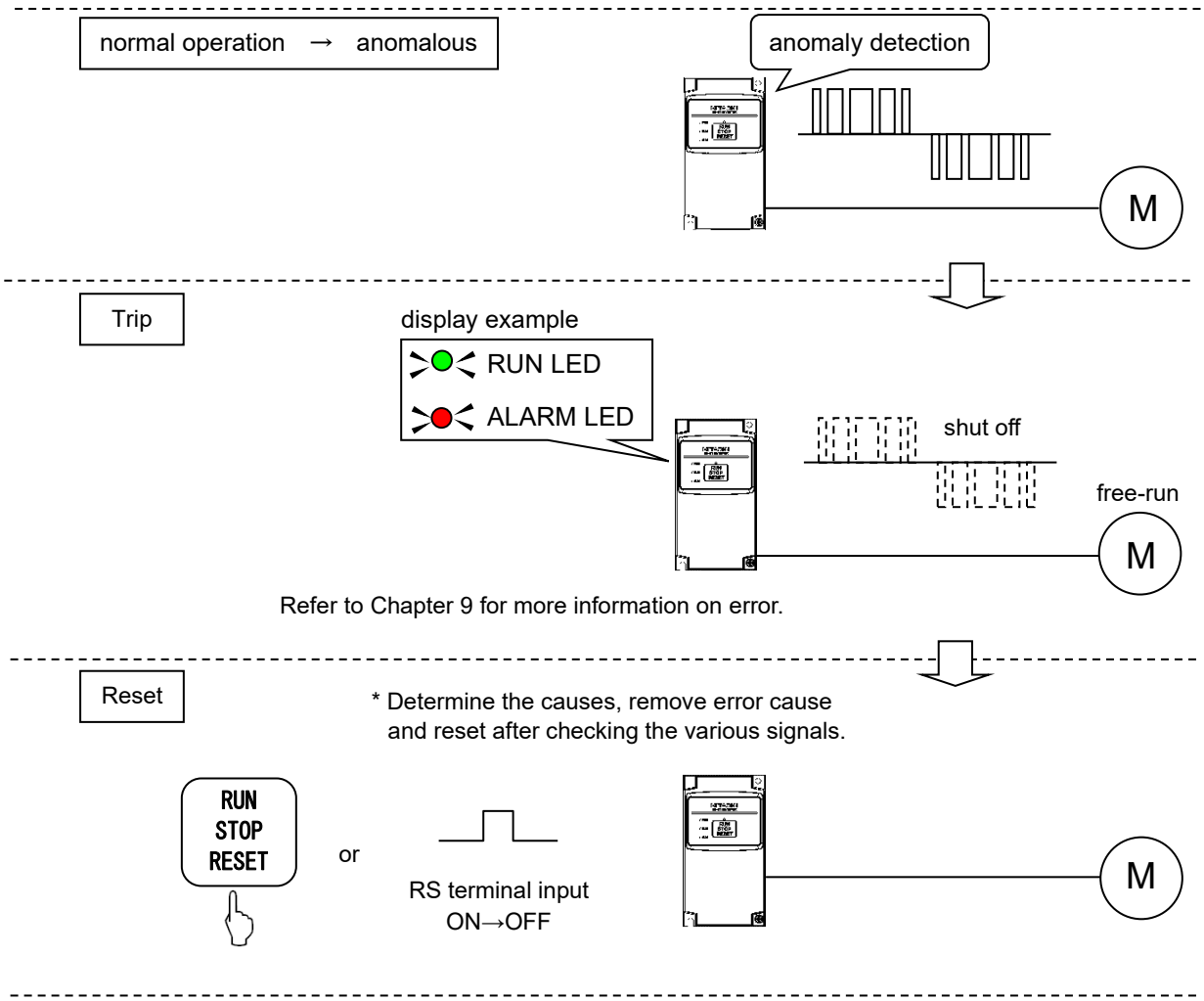

Overview of the operation at occuring trip.

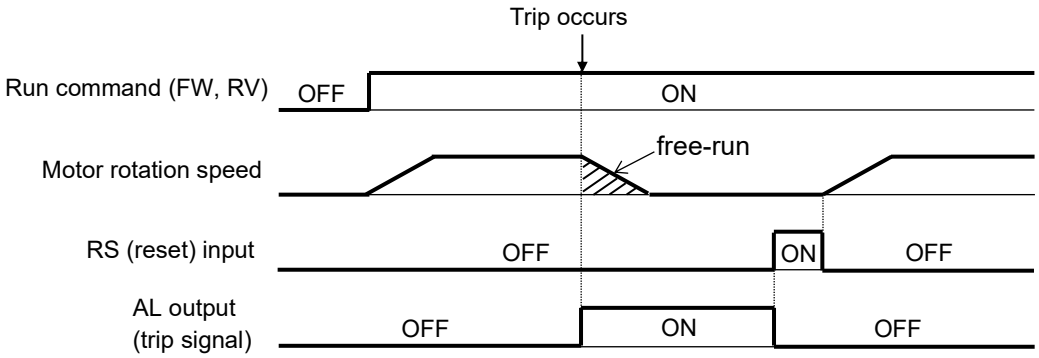

Chapter 7 Explanation of Functions

This chapter describes the functions of the inverter.
An operator (NES1-OP, OPE-SRmini, OPE-S/SR/SBK, SOP, SOP-VR or WOP) is needed to change a parameter setting or monitoring the parameters. Parameter settings can be changed using the ProDriveNext.
In this chapter, the digital operator (NES1-OP, OPE-SRmini, OPE-S/SR/SBK, SOP, SOP-VR) is premised to be connected to the inverter.

7.1 Monitoring the data ..... 7 - 3
7.2 Using the basic functions ..... 7 - 9
7.3 Setting the intelligent I/O terminal function ..... 7 - 17
7.4 Using the analog terminal ..... 7 - 21
7.5 To drive the motor ..... 7 - 25
7.6 Functions related to the operator display ..... 7 - 50
7.7 Functions about restarting ..... 7 - 55
7.8 Set functions related to protection and warning, each output signal..... 7 - 66
7.9 Initializing ..... 7 - 83
7.10 PM Motor Drive..... 7 - 84

(Memo)

7.1 Monitoring the data

7.1.1 Output frequency monitoring (d001)

When the output frequency monitoring (d001) is selected, the inverter displays the output frequency. The inverter displays "0.00" when the frequency output is stopped.
The Hz monitor lamp lights up while the inverter is displaying the output frequency (except NES1-OP).

(Display)
0.00 to 99.99 in steps of 0.01 Hz
100.0 to 400.0 in steps of 0.1 Hz

Note1: When the up/down memory mode is set to clear last frequency command (C101=00), the frequency command changed by the UP/DWN function is not stored.
Note2: Do not operate (A020), (A220), (A021) to (A027), (F001), (d001), (d007) by the △/▽ key on the operator after power off. Also, do not perform the intelligent input UP/DWN terminal operation and the △/▽ key operation at the same time after power off. The frequency command may not be stored correctly because all of the parameter settings are saved after power off.

Monitoring and setting mode of the output frequency

If the frequency set in monitoring is set to enabled (b163=01) and the output frequency monitoring (d001) is displaying, the output frequency can be changed by the △/▽ key only during the inverter is operating the motor.

1) This mode is only valid when the frequency source is set to operator (A001=02).
2) The changed frequency data will be reflected in the output frequency setting (F001).
3) Press the STR key (NES1-OP: SET key) to write the new frequency data to the currently selected frequency setting.
4) This mode will be invalid while the PID function is enabled or the inverter is not operating the motor.
5) If the △/▽ key is operated in this mode, d001 display changes to F001 display. So, there may be a time difference between the key operation and the changed frequency data display.
6) The single-digit edit mode (refer to page 6 - 9) is invalid in this mode.

7.1.2 Output current monitoring (d002)

When the output current monitoring (d002) is selected, the inverter displays the output current. The inverter displays "0.0" when the current output is stopped.

(Display)
0.0 to 655.3 in steps of 0.1 A

7.1.3 Rotation direction monitoring (d003)

When the rotation direction monitoring (d003) is selected, the inverter displays the motor operation direction.
The RUN LED lights up while the inverter is operating the motor (in forward or reverse direction).

(Display)
F: Forward operation
o: Motor stopped
r: Reverse operation

7.1.4 PV (Process variable) monitoring (d004,A071,A075)

When "01" (PID enabled) or "02" (PID enabled with reverse output) has been specified for function "A071" (PID enable) and the PV monitoring (d004) is selected, the inverter displays the PV.
You can also convert the PV to gain data by setting a PV scale conversion (A075).

Value displayed by function "d004" = "PV quantity (%)" x "PV scale conversion (A075)".
The PV scale conversion can be set by function "A075" within the range 0.01 to 99.99 in steps of 0.01.

(Display)
0.00 to 99.99 in steps of 0.01
100.0 to 999.9 in steps of 0.1
1000. to 9999. in steps of 1
1000 to 9999 in steps of 10
⌈100 to ⌈999 in units of 1,000

7.1.5 Intelligent input terminal status (d005)

When the intelligent input terminal status (d005) is selected, the inverter displays the states of the inputs to the intelligent input terminals.
The internal CPU of the inverter checks each intelligent input state, and the inverter displays active inputs as those in the ON state. (*1)
Intelligent input terminal status is independent of the a/b-contact selection for the intelligent input terminals.

(Example) Intelligent input terminals [2], and [1]: ON
Intelligent input terminals [5], [4], and [3]: OFF

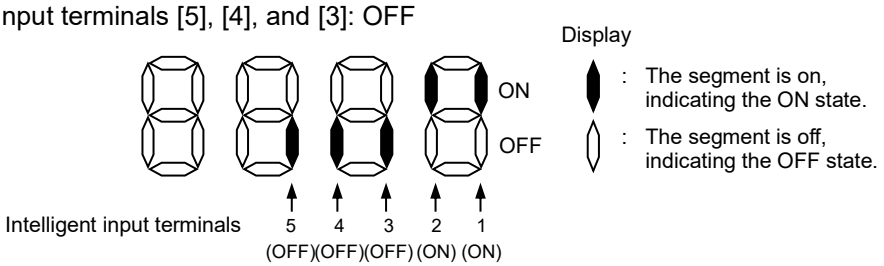

(*1) When input terminal response time is set, terminal recognition is delayed. Please refer to subsection "7.3.3 Intelligent input terminal response time".

7.1.6 Intelligent output terminal status (d006)

When the intelligent output terminal status (d006) is selected, the inverter displays the states of the outputs from the intelligent output terminals.
This function does not monitor the states of the control terminals but monitors those of the outputs from the internal CPU.
Intelligent output terminal status is independent of the a/b-contact selection for the intelligent output terminals.

(Example)
Intelligent output terminal [11]: ON
Intelligent relay outputs: OFF

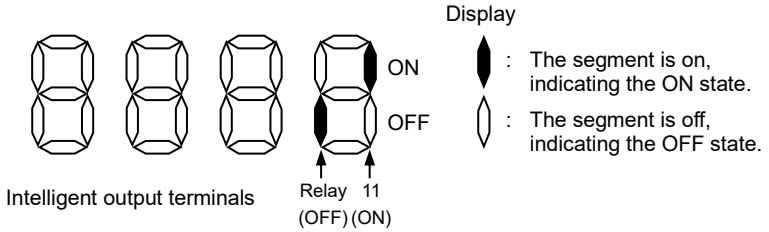

7.1.7 Scaled output frequency monitoring (d007,b086)

When the scaled output frequency monitoring (d007) is selected, the inverter displays the gain data converted from the output frequency with the frequency scaling conversion factor (b086).
Use this function, for example, to change the unit of a value (e.g., motor speed) on display.
Value displayed by function "d007" = "output frequency monitoring (d001)" x "frequency scaling conversion factor (b086)"
The frequency scaling conversion factor (b086) can be set within the range 0.01 to 99.99 in steps of 0.01.

(Example) Displaying the speed of a 4-pole motor
Speed N (min^{-1}) = (120 × f (Hz)) / pole = f (Hz) × 30
As the result of the above calculation with the factor (b086) set to 30.00, the inverter displays "1800." (60 x 30.00) when the output frequency is 60 Hz.

(Display)
0.00 to 99.99 in steps of 0.01
100.0 to 999.9 in steps of 0.1
1000. to 9999. in steps of 1
1000 to 3999 in units of 10

Note1: When the up/down memory mode is set to clear last frequency command (C101=00), the frequency command changed by the UP/DWN function is not stored.
Note2: Do not operate (A020), (A220), (A021) to (A027), (F001), (d001), (d007) by the △/▽ key on the operator after power off. Also, do not perform the intelligent input UP/DWN terminal operation and the △/▽ key operation at the same time after power off. The frequency command may not be stored correctly because the settings are saved after power off.

Monitoring and setting mode of the output frequency

If the frequency set in monitoring is set to enabled (b163=01) and the scaled output frequency monitoring (d007) is displaying, the output frequency can be changed by the △/▽ key only during the inverter is operating the motor.

1) This mode is only valid when the frequency source is set to operator (A001=02).
2) The changed frequency data will be reflected in the output frequency setting (F001).
3) Press the STR key (NES1-OP: SET key) to write the new frequency data to the currently selected frequency setting.
4) This mode will be invalid while the PID function is enabled or the inverter is not operating the motor.
5) If the △/▽ key is operated in this mode, d007 display changes to F001 display. So, there may be a time difference between the key operation and the changed frequency data display.
6) The single-digit edit mode (refer to page 6 - 9) is invalid in this mode.

7.1.8 Output voltage monitoring (d013)

When the output voltage monitoring (d013) is selected, the inverter displays the voltage output from the inverter.

(Display)
0.0 to 600.0 in steps of 0.1 V

7.1.9 Input power monitoring (d014)

When the input power monitoring (d014) is selected, the inverter displays the electric power (momentary value) input to the inverter.

(Display)
0.0 to 999.9 in steps of 0.1 kW

7.1.10 Cumulative power monitoring (d015,b078,b079)

When the cumulative power monitoring (d015) is selected, the inverter displays the cumulative value of electric power input to the inverter.
You can also convert the value to be displayed to gain data by setting the cumulative power display gain (b079).

Value displayed by function "d015" = "calculated value of input power (kWh)" / "cumulative power display gain (b079)".
The cumulative power display gain (b079) can be set within the range 1. to 1000. in steps of 1.

You can clear the cumulative power data by specifying "01" for the cumulative power clearance (b078) and pressing the STR key (NES1-OP: SET key).
You can also clear the cumulative power data by turning ON the intelligent input terminal that is assigned "53" (KHC: Clear watt-hour data).
When the cumulative power display gain (b079) is set to "1000.", the cumulative power data up to 999,000,000 (kWh) can be displayed.

(Display)
0.0 to 999.9 in steps of 0.1 kWh, or the unit set for function "b079"
1000. to 9999. in steps of 1 kWh, or the unit set for function "b079"
1000 to 9999 in units of 10 kWh, or the unit set for function "b079"
⌈100 to ⌈999 in units of 1,000 kWh, or the unit set for function "b079"

7.1.11 Cumulative operation RUN time monitoring (d016)

When the cumulative operation RUN time monitoring (d016) is selected, the inverter displays the cumulative time of the inverter operation.

(Display)
0. to 9999. in units of 1 hour
1000 to 9999 in units of 10 hours
⌈100 to ⌈999 in units of 1,000 hours

7.1.12 Cumulative power-on time monitoring (d017)

When the cumulative power-on time monitoring (d017) is selected, the inverter displays the cumulative time throughout which the inverter power has been on.

(Display)
0. to 9999. in units of 1 hour
1000 to 9999 in units of 10 hours
⌈100 to ⌈999 in units of 1,000 hours

7.1.13 Heatsink temperature monitoring (d018)

When the heatsink temperature monitoring (d018) is selected, the inverter displays the temperature of the internal heatsink of the inverter.

(Display)
-20.0 to 120.0 in steps of 0.1 °C

7.1.14 Current time monitoring (d031)

When the current time monitoring (d031) is selected, the inverter displays the current time. This function is only displayed when WOP is connected. Please refer to WOP manual (NT214X).

7.1.15 Dual monitoring (d050,b160,b161)

When the dual monitoring (d050) is selected, the inverter displays two different data configured in "b160" and "b161".

Item	Func. code	Range of data	Description
Dual monitoring	d050	–	Two monitor data that is setting in b160 and b161.
1st parameter of Dual Monitor	b160	001 to 018	d001 to d018 (*1)
2nd parameter of Dual Monitor	b161	001 to 018	d001 to d018 (*1)

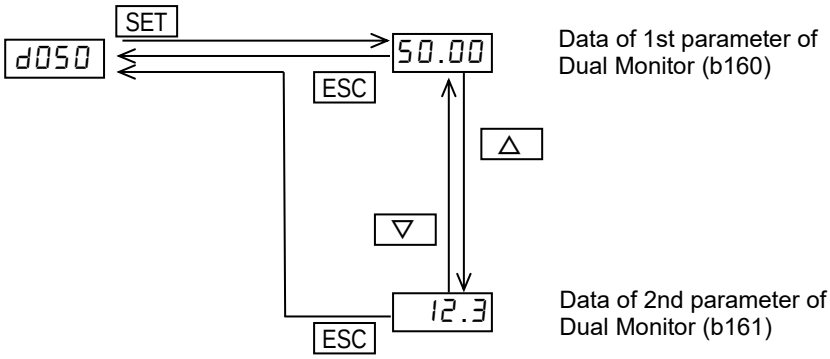

(*1) If the frequency set in monitoring is set to enabled (b163=01), the output frequency can be changed at "d001" or "d007" by the △/▽ key in driving. But you can not change the output frequency setting at "d050", even if "b160" or "b161" is set to "d001" or "d007".

7.1.16 Inverter mode monitoring (d060)

When the Inverter mode monitoring (d060) is selected, the inverter displays the current inverter mode. (This function is added from NE-S1 Ver.2.0.)

(Display)
I : Induction Motor
P: Permanent Magnet Motor

7.1.17 Trip Counter (d080)

When the trip counter (d080) is selected, the inverter displays the number of times the inverter has tripped.

(Display)
0. to 9999. in units of 1 trip
1000 to 6553 in units of 10 trips

7.1.18 Trip monitoring 1 to 6 (d081 to d086)

When the trip monitoring 1 to 6 (d081 to d086) is selected, the inverter displays the trip history data. The last six protective trips the inverter made can be displayed.
Select the trip monitoring 1 (d081) to display the data on the most recent trip.

(Display contents)
1) Factor of tripping (one of E01 to E41) (*1)
2) Output frequency at tripping (Hz)
3) Output current at tripping (A) (*2)
4) DC bus voltage at tripping (VDC) (*3)
5) Cumulative operation RUN time until tripping (hr)
6) Cumulative power-on time until tripping (hr)

(*1) Please refer to "Chapter 9 Error Codes".
(*2) When the inverter status is in stop mode as a trip history ("E**.1"), monitored value can be zero.
(*3) When ground fault protection is detected at power on, monitored value can be zero.

Display by trip monitoring

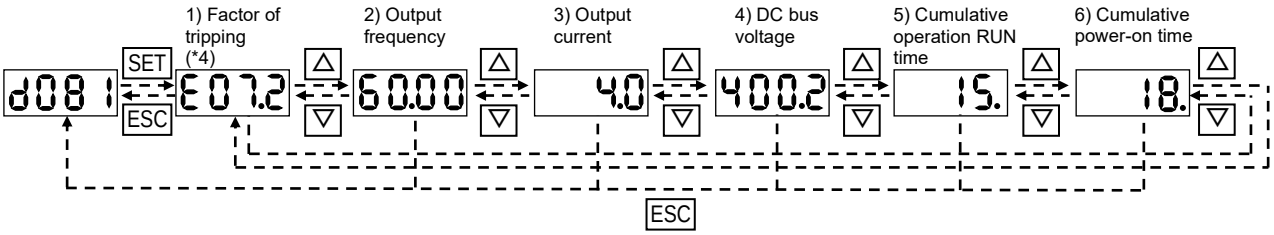

(*4) If the inverter has not tripped before, the inverter displays - - - - .

7.1.19 Warning monitoring (d090)

If an attempt is made to set the data conflicting with other data on the inverter, the inverter displays a warning in the operator. Please refer to section "9.3 Warning Codes for Digital operator".
The Program LED flashes while the warning is displayed (until the data is rewritten forcibly or corrected).

7.1.20 DC bus voltage monitoring (d102)

When the DC bus voltage monitoring (d102) is selected, the inverter displays the DC bus voltage of the inverter. While the inverter is operating, the monitored value changes as the actual DC bus voltage of the inverter changes.

(Display)
0.0 to 1000. in steps of 0.1 VDC

7.1.21 Electronic thermal overload monitoring (d104)

When the electronic thermal overload monitoring (d104) is selected, the inverter displays the current electronic thermal overload rate. If the electronic thermal overload monitoring (d104) exceeds 100 %, the inverter will trip because of the overload protection (error code "E05").

(Display)
0.0 to 100.0 in steps of 0.1 %

<IMPORTANT!>
Please be sure to set the induction motor nameplate data into appropriate parameters to ensure proper operation and protection of the induction motor. Refer to the appropriate pages in this guide.
*b012/b212 are the induction motor overload protection level.
*A082/A282 are the induction motor AVR voltage selection.
*H003/H203 are the induction motor capacity.
*H004/H204 are the number of induction motor poles.

7.2 Using the basic functions

7.2.1 Frequency source setting and Output frequency setting (F001,A001/A201,A020/A220,A021 to A027,C001 to C005)

(1) Frequency source setting

The frequency source setting function allows you to select the method to input the frequency setting command.

Item	Function code	Data	Description
Frequency source	A001 A201	00	(Valid only when the NES1-OP, OPE-SR/SRmini is used) Use the VR control provided on the valid operator to set the frequency.
		01	Input the frequency setting command via the control terminal (O/OI-L).
		02	Use the operator (function "F001") to set the frequency.
		03	Input the frequency setting command via the Modbus communication.
		10	Use the operation result of the frequency calculation function as the frequency setting command. Please refer to subsection "7.5.14 Frequency calculation function".

(2) Output frequency setting

The output frequency setting function allows you to set the inverter output frequency.
You can set the inverter output frequency with "F001" only when you have specified "02" for the frequency source (A001/A201). If the setting of function "A001/A201" is other than "02", "F001" operates as the frequency command monitoring function.
The frequency set with "F001" is automatically set as the multi-speed frequency 0 (A020). To set the 2nd motor output frequency, use the multi-speed frequency 0, 2nd motor (A220) or use "F001" for the setting after turning on the "SET" signal. About "SET" signal, refer to subsection "7.5.21 2nd motor control function (SET)".
If the PID function is valid, the output frequency setting (F001) will be displayed in percent (%).
(Setting range: 0.0 to 100.0 (%).)

Item	Function code	Range of data	Description
Output frequency setting	F001	0.0, start frequency to maximum frequency, 1st/2nd motors (Hz)	The frequency set with "F001" is equal to the setting of "A020". The 2nd motor control frequency set with "F001" is equal to the setting of "A220".
Multi-speed frequency 0	A020/A220		

■Case1: Setting the output frequency by the operator

Item	Function code	Range of data	Description
Frequency source	A001/A201	02	Operator

■Case2: Setting the output frequency by analog input

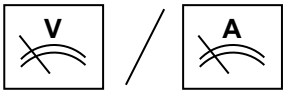

Item	Function code	Range of data	Description
Frequency source	A001/A201	01	Control terminal

Note) It is able to select analog input method either voltage input (O) or current input (OI) by the switch for O/OI (analog input) changeover (SW6). Please refer to section "3.2 Name of each portion (removing the front cover)".

■Case3: Setting the output frequency by multi-speed function

If one or more of the intelligent input terminals are assigned to "CF1" to "CF3" or "SF1" to "SF3" and turn ON, the multi-speed function is valid regardless the setting of frequency source (A001/A201).
The frequency command is set from one of the multi-speed frequencies 1 to 7 (A021 to A027) by the multi-speed function. But, if all of the intelligent input terminals assigned to "CF1" to "CF3" or "SF1" to "SF3" turn OFF (define to "speed 0"), the frequency command is set according to frequency source (A001/A201).
Please refer to subsection "7.5.11 Multi-speed select setting (CF1 to CF3 and SF1 to SF3)" for more information of multi-speed function.

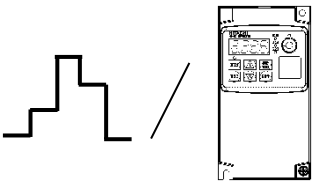

Item	Function code	Range of data	Description
Frequency source	A001/A201	**	This setting is valid at "speed 0".
Intelligent input [1] to [5] function	C001 to C005	02-04 32-34	CF1 to CF3: binary operation SF1 to SF3: bit operation Binary or bit operation can be selected by (A019).
Multi-speed frequency 0	A020/A220	Note)	Multi-speed frequency setting
Multi-speed frequency 1 to 7	A021 to A027	Note)	Multi-speed frequency setting

Note) Range of data: 0.00, start frequency (b082) to maximum frequency (A004/A204)(Hz).

■Case4: Setting the output frequency by switching between the operator and the other source

If one of the intelligent input terminals is assigned to "OPE" and turns ON, the frequency source will be forced to the operator regardless the setting of frequency source (A001/A201).
Notice: If "OPE" terminal turns on, the run command source will be forced to the operator, too.

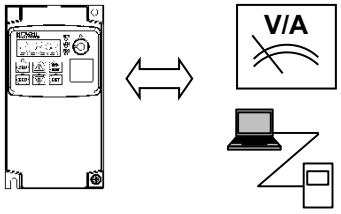

Item	Function code	Range of data	Description
Intelligent input [1] to [5] function	C001 to C005	31	OPE: operator control ON: operator OFF: according to (A001/A201) setting

■Case5: Setting the output frequency by switching between analog input and the other source

If one of the intelligent input terminals is assigned to "F-TM" and turns ON, the frequency source will be forced to the control terminal (analog input) regardless the setting of frequency source (A001/A201).
Notice: If "F-TM" terminal turns on, the run command source will be forced to the control terminal, too.

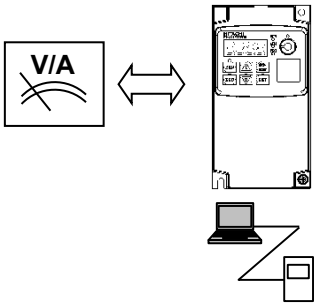

Item	Function code	Range of data	Description
Intelligent input [1] to [5] function	C001 to C005	51	F-TM: force terminal mode ON: control terminal OFF: according to (A001/A201) setting

Note) If both of "OPE" and "F-TM" terminals are ON, the frequency source and the run command source are forced to the operator.

The related diagram of the frequency command selection is shown below.
The inverter output is performed according to the "frequency command" obtained from several conditions in the related diagram.

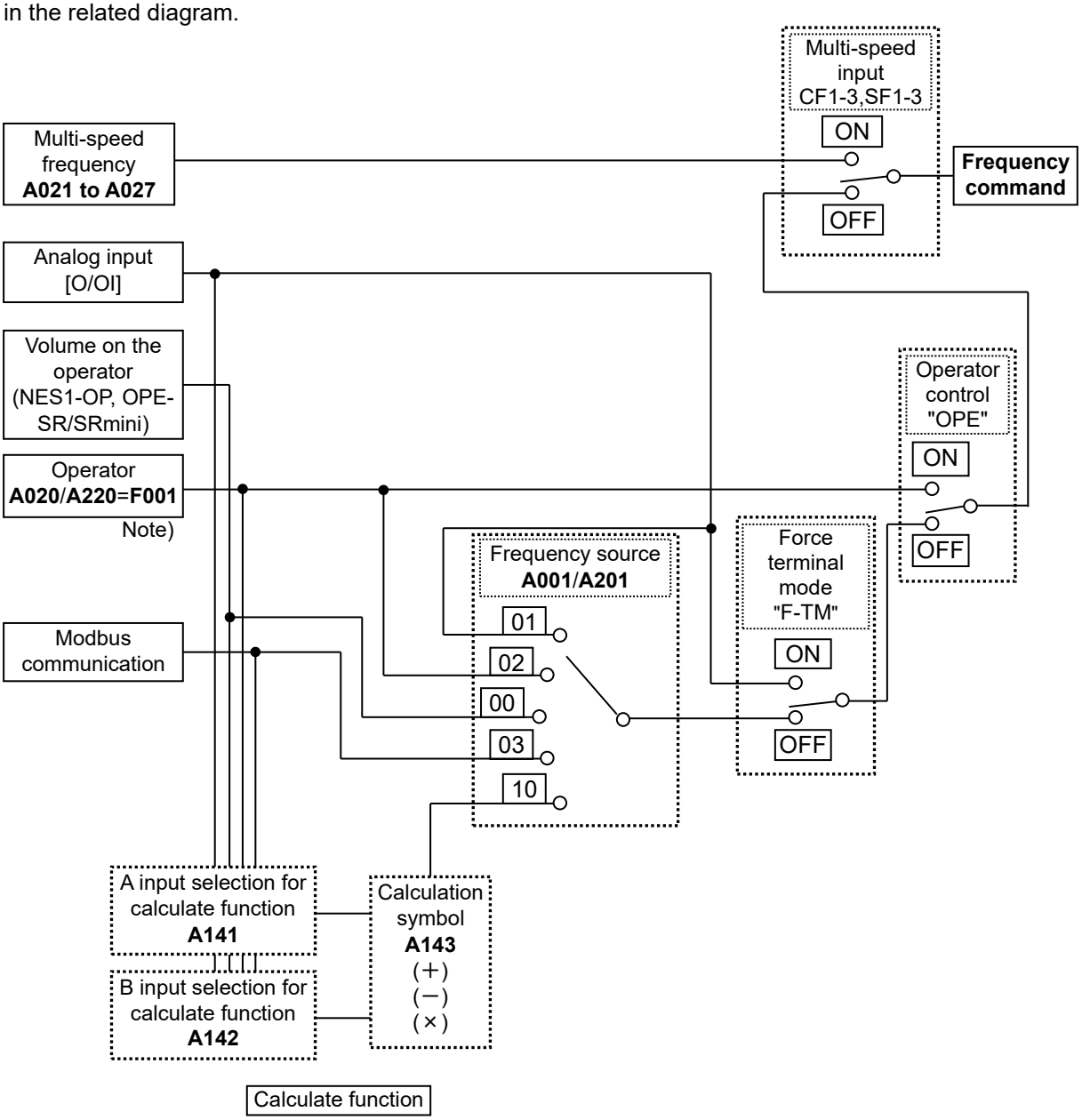

Note) If the frequency source is set to operator (A001/A201=02), it is able to set the frequency command by "F001". If the frequency source is set to other than operator (A001/A201≠02), it is not able to set but to monitor the frequency command by "F001".
If the frequency set in monitoring is set to enabled (b163=01) and "d001" or "d007" is displaying, the frequency command can be changed by the △/▽ key only during the inverter is operating the motor.

7.2.2 Run command source setting (A002/A202,C001 to C005,C011 to C015,F004)

The run command source setting function allows you to select the method to input operation commands (to start and stop the motor).
As the operation commands via control terminals, turn the "FW" signal (for forward operation) or "RV" signal (for reverse operation) on and off to start and stop the motor, respectively.
(Note that the factory setting assigns the "FW" signal to intelligent input terminal [1] and the "RV" signal to intelligent input terminal [2].)
To switch each intelligent input terminal active state between a-contact and b-contact, specify each terminal with function "C011" to "C015", and then perform input NO/NC selection for each terminal.
When using the digital operator for the inverter operation, specify the desired motor operation direction with function "F004", and use the RUN and STOP/RESET keys to start and stop the motor, respectively.
If the start commands for both forward and reverse operations are input at the same time, the inverter will assume the input of a stop command.

Item	Function code	Data	Description
Run command source	A002 A202	01	Input the start and stop commands via control terminals.
		02	Input the start and stop commands via the standard panel or the operator.
		03	Input the start and stop commands via Modbus communication.
Intelligent input [1] to [5] function	C001 to C005	00	FW: Forward Run/Stop
		01	RV: Reverse Run/Stop
Intelligent input [1] to [5] active state	C011 to C015	00	a-contact (NO)
		01	b-contact (NC)

Note 1: If "OPE" (Operator Control) or "F-TM" (Force Terminal Mode) is assigned to an intelligent input terminal, the settings made with functions "A001/A201" and "A002/A202" will be invalidated when the said intelligent input terminal is turned on and those methods to input frequency setting and operation commands which are specified for the said intelligent input terminal will be enabled.
Note 2: On the WOP being used to operate the inverter, pressing the REMOTE key enables you to input both frequency setting and operation commands from the WOP.
Note 3: RUN/STOP/RESET key on the standard panel is valid regardless of the "A002/A202". However, when setting 3-wire function is disabled. Refer to subsection "7.5.3 3-wire input function (STA, STP, and F/R)" for more information of the 3-wire function.

7.2.3 Run key routing (F004)

When you enter operation commands via the standard panel or the digital operator, the run key routing function allows you to select the direction of motor operation.
This function is ineffective when you use the other methods (including via WOP) to input operation commands.

Item	Function code	Data	Description
Run key routing	F004	00	Forward operation
		01	Reverse operation

7.2.4 Rotational direction restriction (b035)

The rotational direction restriction function allows you to restrict the direction of motor operation.
This function is effective regardless of the specification of operation command input device (e.g., control terminal or digital operator).
If an operation command to drive the motor in a restricted direction is input, the inverter (digital operator) will display 0000 .

Item	Function code	Data	Description
Rotation direction restriction	b035	00	Both forward and reverse operations are enabled.
		01	Only forward operation is enabled.
		02	Only reverse operation is enabled.

7.2.5 Stop mode selection (b091)

The stop mode selection function allows you to select one of two methods of stopping the motor when a stop command is input. One is to decelerate the motor according to the specified deceleration time and then stop it; the other is to let the motor be free-running until it stops.
If a start command is input while the motor is in free-running status, the inverter will restart the motor according to the setting of the restart mode after FRS (b088).

Item	Function code	Data	Description
Stop mode selection	b091	00	Normal stopping (stopping after deceleration)
		01	Free-running until stopping

7.2.6 Acceleration/deceleration time setting (F002/F202,F003/F203)

Specify a longer time for slower acceleration or deceleration; specify a shorter time for quicker acceleration or deceleration.
The time set with this function is the time to accelerate (or decelerate) the motor from 0 Hz to the maximum frequency (or vice versa).
It is able to divide the acceleration and deceleration into two phases. Please refer to subsection "7.5.12 Two-stage acceleration/deceleration function (2CH)" for detail.

Item	Function code	Range of data	Description
Acceleration time (1)	F002/F202	0.00 to 3600.(s)	Set the length of time to accelerate the motor from 0 Hz to the maximum frequency.
Deceleration time (1)	F003/F203	0.00 to 3600.(s)	Set the length of time to decelerate the motor from the maximum frequency to 0 Hz.

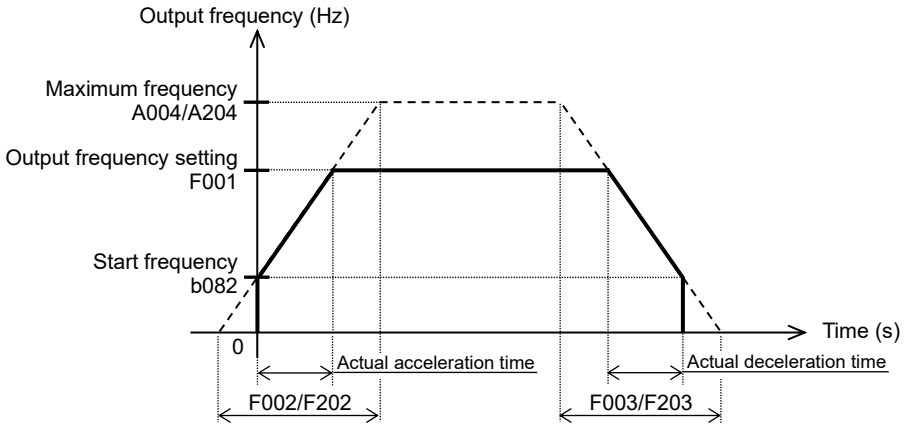

The actual time to accelerate / decelerate the motor will be no less than the minimum acceleration / deceleration time that depends on the inertial moment (J) due to the mechanical system and motor torque. If you set a time shorter than the minimum acceleration / deceleration time, the inverter may trip because of overcurrent (E01 to E04) or overvoltage (E07).

Minimum acceleration time: t_S (s)

$$t_S = \frac{(J_L+J_M)\times N_M}{9.55\times(T_S-T_L)}$$

Minimum deceleration time: t_B (s)

$$t_B = \frac{(J_L+J_M)\times N_M}{9.55\times(T_B+T_L)}$$

J_L: Inertia moment (J) of the load converted to that of the motor shaft (kgm^2)
J_M: Inertia moment (J) of the motor (kgm^2)
N_M: Motor speed (min^{-1})
T_S: Maximum acceleration torque driven by the inverter (N·m)
T_B: Maximum deceleration torque driven by the inverter (N·m)
T_L: Required running torque (N·m)

7.2.7 Base frequency setting (A003/A203,A082/A282)

(1) Base frequency and motor voltage

With the base frequency setting and AVR voltage select functions, adjust the inverter outputs (frequency and voltage) to the motor ratings.
The base frequency is the nominal frequency of the motor. Set a base frequency that meets the motor specification. Carefully note that setting the base frequency to less than 50 Hz may result in motor burnout.
A special motor requires a base frequency of 60 Hz or more. Your inverter model may not be suitable for such a special motor, and one with a larger capacity may be required.
Select the motor voltage that meets the motor specification. Selecting a motor voltage exceeding the motor specification may result in motor burnout.

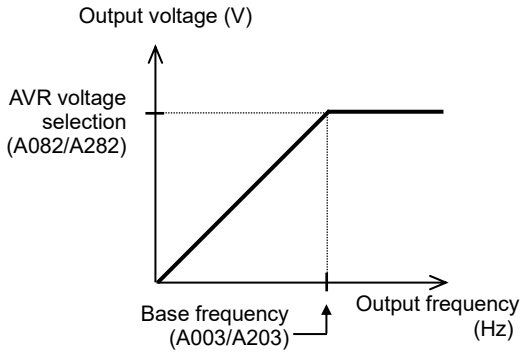

To switch the base frequency among the 1st and 2nd motor controls, refer to subsection "7.5.21 2nd motor control function (SET)".

Item	Function code	Range of data	Description
Base frequency	A003/A203	30.0 to maximum frequency (A004/A204) (Hz)	
AVR voltage selection	A082/A282	200 / 215 / 220 / 230 / 240 (V)	Selectable on 200 V class inverter models.
		380 / 400 / 415 / 440 / 460 / 480 (V)	Selectable on 400 V class inverter models.

7.2.8 Using the AVR Functions (A081/A281, A082/A282, A083, A084)

(1) What's the AVR function?

The AVR function maintains the correct voltage output to the motor, even when the input voltage to the inverter fluctuates. The output voltage maintained by this function is based on the voltage specified by the AVR voltage selection (A082/A282). But it cannot exceed the input voltage to the inverter.
Use the AVR function selection (A081/A281) to enable or disable the AVR function.

(2) AVR filter time constant and AVR deceleration gain

Motor acts as a generator during deceleration. Therefore, energy is regenerated to the inverter. As a result, the DC bus voltage of the inverter is increased. If DC bus voltage exceeds overvoltage level, the inverter is generated the overvoltage trip (E07).
The higher the output voltage of the inverter, energy is consumed by the increasing loss of the motor. Therefore, it is possible to shorten the deceleration time. (However, the burden of the motor is increased.)
In order to shorten the deceleration time without tripping the overvoltage,

1. Set the AVR function selection (A081/A281) = "02" (AVR enabled except during deceleration).
2. Please tune voltage characteristics using the AVR filter time constant (A083) and the AVR deceleration gain (A084).

Item	Function code	Data	Description
AVR function selection	A081/A281	00	The AVR function is always enabled.
		01	The AVR function is always disabled.
		02	The AVR function is disabled at deceleration. (*1)
AVR voltage selection	A082/A282	200 / 215 / 220 / 230 / 240 (V)	Selectable on 200 V class inverter models.
		380 / 400 / 415 / 440 / 460 / 480 (V)	Selectable on 400 V class inverter models.
AVR filter time constant	A083	0.000 to 1.000 (s)	See diagram below. (*2)
AVR deceleration gain	A084	50. to 200. (%)	See diagram below. (*2)(*3)

(*1) Disabling the AVR function at motor deceleration increases the energy loss on the decelerated motor and decreases the energy regenerated on the inverter, which results in a shorter deceleration time.
(*2) Operate regardless of the "A081/A281" at deceleration.
(*3) After NE-S1 Ver.2.0, when the AVR function selection (A081/A281) is other than "00" (always enabled), the AVR deceleration gain (A084) will be effective at constant speed.

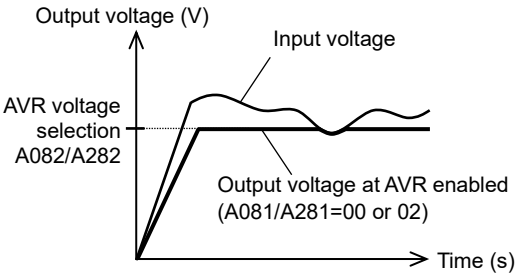

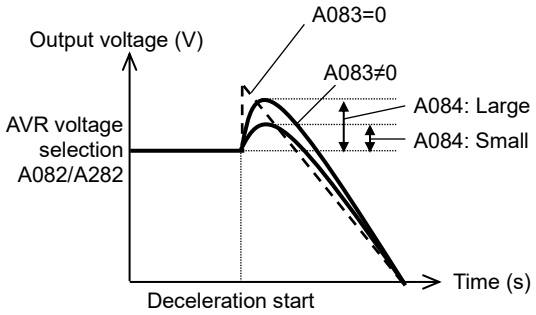

Example) If set to A081/A281=02

7.2.9 Maximum frequency setting (A004/A204)

The maximum frequency setting function allows you to set the maximum frequency of the motor driven by the inverter.
The maximum frequency set here corresponds to the maximum level of each external analog input (for example, 10 VDC of the input of 0 to 10 VDC).
To switch the maximum frequency among the 1st and 2nd motor controls, refer to subsection "7.5.21 2nd motor control function (SET)".
The inverter output voltage with the frequency ranging from the base frequency to the maximum frequency is that selected by the AVR voltage selection (A082/A282).

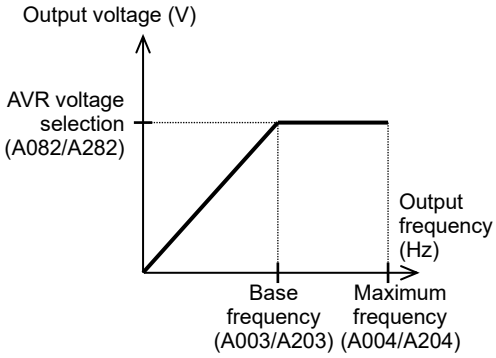

Item	Function code	Range of data	Description
Maximum frequency	A004/A204	Base frequency (A003/A203) to 400.0 (Hz)	The maximum output frequency is set.

7.2.10 Carrier frequency setting (b083)

The carrier frequency setting function allows you to change the carrier frequency of the PWM waveform output from the inverter.
Increasing the carrier frequency can lower the metallic noise from the motor, but may increase the inverter noise (radiation noise, electrical noise, etc.) and current leakage.
You can use this function effectively to avoid resonance of the mechanical system and motor.

Item	Function code	Range of data	Description
Carrier frequency	b083	2.0 to 15.0 (kHz)	

Note: When increasing the carrier frequency, derate the output current as shown in the section "12.3. Derating Curves".

■Carrier frequency and affecting range

Carrier frequency	Low ←→	High
Metallic noise from the motor	× (High)	○ (Low)
Inverter noise and current leakage	○ (Low)	× (High)
Inverter heating	○ (Low)	× (High)

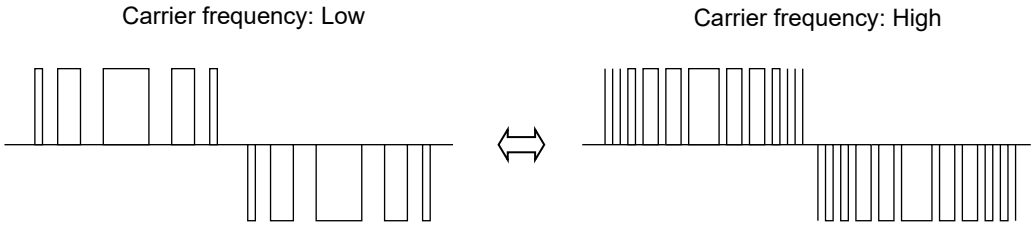

<Example> Output voltage waveform of the inverter (PWM output)

7.3 Setting the intelligent I/O terminal function

7.3.1 Intelligent input terminal setting (C001 to C005)

You can assign the functions described below to intelligent input terminals [1] to [5]. To assign the desired functions to the terminals, specify the desired data listed in the table below for terminal settings "C001" to "C005". For example, "C001" corresponds to intelligent input terminal [1].
You can select the a-contact or b-contact input for individual intelligent input terminals.
You can assign one function only to an intelligent input terminal. If you have attempted to assign a function to two or more intelligent input terminals, the function is assigned to only the terminal to which you have last attempted assignment and function data "no" (no assign) is assigned to other terminals, and those terminals are ineffective in terms of functions.
After assigning the desired functions to intelligent input terminals [1] to [5], confirm that the assigned functions have been stored on the inverter.

Function code	Data	Description	Reference item	Page
C001 to C005	00	FW: Forward Run/Stop	Operation command	7 - 12
	01	RV: Reverse Run/Stop		
	02	CF1: Multi-speed selection, Bit 1	Multi-speed operation function (binary)	7 - 33
	03	CF2: Multi-speed selection, Bit 2		
	04	CF3: Multi-speed selection, Bit 3		
	06	JG: Jogging	Jogging operation function	7 - 30
	07	DB: External DC braking	DC braking (external DC braking) function	7 - 46
	08	SET: Set (select) 2nd Motor Data	2nd motor control function	7 - 45
	09	2CH: Two-stage Acceleration and Deceleration	2-stage acceleration/deceleration function	7 - 35
	11	FRS: Free-run Stop	Free-run stop function	7 - 62
	12	EXT: External Trip	External trip function	7 - 72
	13	USP: Unattended Start Protection	Unattended start protection function	7 - 63
	15	SFT: Software Lock	Software lock function	7 - 50
	18	RS: Reset Inverter	Reset function	7 - 60
	20	STA: Start (3-wire interface)	3-wire input function	7 - 28
	21	STP: Stop (3-wire interface)		
	22	F/R: FW, RV (3-wire interface)		
	23	PID: PID Disable	PID function	7 - 40
	24	PIDC: PID Reset		
	27	UP: Remote Control UP Function	Remote control (UP/DWN) function	7 - 38
	28	DWN: Remote Control DOWN Function		
	29	UDC: Remote Control Data Clearing		
	31	OPE: Operator Control	Forcible-operation from the operator function	7 - 51
	32	SF1: Multi-speed selection, Bit operation Bit 1	Multi-speed operation function (Bit)	7 - 34
	33	SF2: Multi-speed selection, Bit operation Bit 2		
	34	SF3: Multi-speed selection, Bit operation Bit 3		
	39	OLR: Overload Restriction Source Changeover	Overload restriction function	7 - 69
	50	ADD: ADD frequency enable	Frequency addition function	7 - 38
	51	F-TM: Force Terminal Mode	Forcible-operation from terminal function	7 - 51
	53	KHC: Clear watt-hour data	Cumulative power monitoring function	7 - 6
	65	AHD: Analog command hold	Analog command holding function	7 - 22
	83	HLD: Retain output frequency	Retain output frequency function	7 - 32
	84	ROK: Permission of Run command	Permission of Run command function	7 - 32
	86	DISP: Display limitation	Display limitation function	7 - 52
	no	NO: No function	-	-

7.3.2 Intelligent input terminal a/b (NO/NC) selection (C011 to C015)

The intelligent input terminal a/b (NO/NC) selection function allows you to specify a-contact or b-contact input for each of the intelligent input terminals [1] to [5].
The a-contact turns on the input signal when closed and turns it off when opened.
The b-contact turns on the input signal when opened and turns it off when closed.
The intelligent input terminal to which the "RS" (reset) is assigned functions only as an a-contact.

Item	Function code	Data	Description
Intelligent input [1] to [5] active state	C011 to C015	00	a-contact (NO: normally open)
		01	b-contact (NC: normally closed)

7.3.3 Intelligent input terminal response time (C160 to C164)

The intelligent input terminal response time function allows you to specify a response time for each of intelligent input terminals [1] to [5]. You can use this function effectively to remove noise (e.g., chattering). If the noise hinders constant input from an input terminal, increase the response time setting for the input terminal. Note that an increase in response time deteriorates the response. The response time can be set in a range of about 0 to 400 ms (corresponding to settings of 0 to 200).

Item	Function code	Range of data	Description
Intelligent input [1] to [5] response time	C160 to C164	0. to 200.	Variable in step of 1 (×2 ms)

Note: When the power supply is OFF-> ON or reset , this function is invalid.

7.3.4 Intelligent output terminal setting (C021,C026)

You can assign the functions described below to the intelligent output terminal [11] (C021) and the intelligent relay terminal (C026).
The intelligent output terminal [11] is used for open-collector output, and the intelligent relay terminal is used for relay output.

Function code	Data	Description	Reference item	Page
C021, C026	00	RUN: Run Signal	Running signal	7 - 74
	01	FA1: Frequency Arrival Type 1-Constant Speed	Frequency arrival signals	7 - 74
	02	FA2: Frequency Arrival Type 2-Over frequency		
	03	OL: Overload Advance Notice Signal	Overload restriction / overload notice advance signal	7 - 70
	04	OD: Output Deviation for PID Control	PID function	7 - 43
	05	AL: Alarm Signal	Protective functions	7 - 66
	06	FA3: Frequency Arrival Type 3-Set frequency	Frequency arrival signals	7 - 74
	09	UV: Undervoltage	undervoltage	7 - 55
	11	RNT: Run Time Expired	Operation time over signal	7 - 76
	12	ONT: Power ON time Expired	Power-on time over signal	7 - 76
	13	THM: Thermal Warning	Electronic thermal protection	7 - 68
	21	ZS: Zero Hz Speed Detection Signal	0 Hz detection signal	7 - 76
	27	Dc: Analog Input Disconnect Detection	Window comparators function	7 - 81
	31	FBV: PID Second Stage Output	PID function	7 - 43
	32	NDc: Network Disconnect Detection	RS485 communication	7 - 78
	33	LOG: Logic Output Function	Logical operation function	7 - 77
	41	FR: Starting Contact Signal	Starting contact signal	7 - 78
	42	OHF: Heatsink Overheat Warning	Heatsink overheat warning	7 - 78
	43	LOC: Low current detection	Low-current indication signal	7 - 79
	50	IRDY: Inverter Ready Signal	Inverter ready signal	7 - 79
	51	FWR: Forward Rotation	Forward rotation signal	7 - 79
	52	RVR: Reverse Rotation	Reverse rotation signal	7 - 80
	53	MJA: Major Failure Signal	Major failure signal	7 - 80
	54	WC: Window Comparator for Analog Input	Window comparators function	7 - 81
	58	FREF: Frequency Command Source Signal	Frequency Command Source signal	7 - 82
	59	REF: Run Command Source Signal	Run Command Source signal	7 - 82
	60	SETM: 2nd Motor Selection	2nd Motor Selection signal	7 - 82
	no	NO: No function	-	-

7.3.5 Intelligent output terminal a/b (NO/NC) selection (C031,C036)

The intelligent output terminal a/b (NO/NC) selection function allows you to specify a-contact or b-contact output for each of the intelligent output terminal [11] and the intelligent relay terminal.
The a-contact turns on the output signal when closed and turns it off when opened.
The b-contact turns on the output signal when opened and turns it off when closed.

Item	Function code	Data	Description
Intelligent output [11] active state	C031	00	a-contact (NO: normally open)
		01	b-contact (NC: normally closed)
Intelligent relay active state	C036	00	a-contact (NO: normally open)
		01	b-contact (NC: normally closed)

(1) Specifications of intelligent output terminal [11]

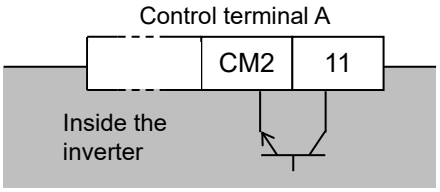

Electric characteristics
(Between terminal [11] and CM2) Voltage drop when turned on: 4 VDC or less Allowable maximum voltage: 27 VDC Allowable maximum current: 50 mA

Setting of "C031"	Power supply	Inverter status	Output signal
00 (a-contact)	ON	Normal	OFF
		Active (Error)	ON
	OFF	–	–
01 (b-contact)	ON	Normal	ON
		Active (Error)	OFF
	OFF	–	–

(2) Specifications of intelligent relay terminal

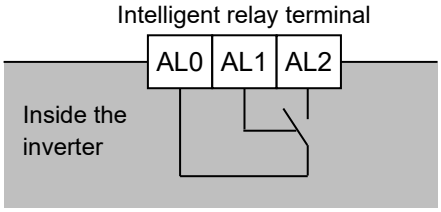

		Resistance load	Inductive load
AL1-AL0	Maximum contact capacity	250 VAC, 2 A 30 VDC, 3 A	250 VAC, 0.2 A 30 VDC, 0.6 A
	Minimum contact capacity	100 VAC, 10 mA 5 VDC, 100 mA	
AL2-AL0	Maximum contact capacity	250 VAC, 1 A 30 VDC, 1 A	250 VAC, 0.2 A 30 VDC, 0.2 A
	Minimum contact capacity	100 VAC, 10 mA 5 VDC, 100 mA	

Example of operation as an alarm output terminal.

Setting of "C036"	Power supply	Inverter status	Output terminal state	
			AL1-AL0	AL2-AL0
00	ON	Error	Closed	Open
		Normal	Open	Closed
	OFF	–	Open	Closed
01 (default)	ON	Error	Open	Closed
		Normal	Closed	Open
	OFF	–	Open	Closed

7.3.6 Output signal delay/hold function (C130,C131,C140,C141)

The output signal delay/hold function allows you to set on delay and off delay times for each output terminal.
Since every output signal is turned on or off immediately when the relevant condition is satisfied, signal chattering may occur if signal outputs conflict with each other. Use this function to avoid such a problem by holding or delaying specific signal outputs.
To use this function, set on delay and off delay times for individual output terminals (a total of two terminals, such as intelligent output terminal [11] and the intelligent relay terminal).

Item	Function code	Range of data	Description
Intelligent output [11] on delay	C130	0.0 to 100.0 (s)	Setting of on delay time for terminal [11].
Intelligent output [11] off delay	C131	0.0 to 100.0 (s)	Setting of off delay time for terminal [11].
Intelligent relay output on delay	C140	0.0 to 100.0 (s)	Setting of on delay time for relay terminal.
Intelligent relay output off delay	C141	0.0 to 100.0 (s)	Setting of off delay time for relay terminal.

7.4 Using the analog terminal

7.4.1 Analog input (O/OI)

This inverter has an external analog input terminal.
If you want to switch the voltage and current inputs, use the switch on the board (SW6).

Voltage input : 0 to 10 VDC (Variable resistor is a voltage input.)
Current input : 0 to 20 mA (Please set "A013=20 %" at the case of "4 to 20 mA".)

The analog input signal can be assigned the following functions.

Item	Function code	Data	Description
Frequency source	A001/A201	01 (Control terminal (O/OI input))	
PID enable	A071	01 (PID Enabled), 02 (PID Enabled with reverse output)	In case of the PID function is enabled, analog input can be used for PV source.
PV source	A076	01 ([O/OI] terminal)	

Example of wiring

Variable resistor
(1 kΩ to 2 kΩ)

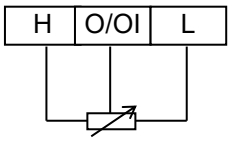

Voltage input
(0 to 10 VDC)

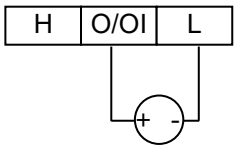

Current input
(0/4 to 20 mA)

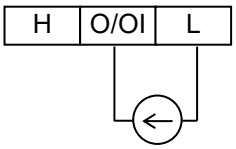

Please refer to section "3.2 Name of each portion (removing the front cover)" about SW6 setting.

7.4.2 Analog input (O/OI) filter setting (A016)

The analog input filter setting function allows you to set the input voltage/current filtering time to be applied when frequency commands are input as analog signals.
You can use this filter function effectively for removing noise from the frequency setting circuit signal.
If the noise disables the stable operation of the inverter, increase the setting value of "A016". Setting a larger value to "A016" makes the inverter response slower. The filtering constant is value of "A016" (1 to 30) x 2 ms.
When the "A016" setting is "31", a hysteresis of ± 0.1 Hz is added to the filtering constant (500 ms).

Item	Function code	Range of data	Description
Analog input filter	A016	1. to 30. or 31.	Setting of 1. to 30. : "Set value x 2" ms filter. Setting of 31. : 500 ms filter (fixed) with hysteresis of ± 0.1 Hz.

7.4.3 Analog command holding function (AHD) (C001 to C005,C101)

The analog command holding function allows you to make the inverter hold the analog command input via the external analog input terminal when the "AHD" terminal is on.
While the "AHD" terminal is on, the up/down function can be used based on the analog signal held by this function as reference data.
When "01" is specified for the up/down memory mode selection (C101), the result of up/down processing can be stored in memory.
If the inverter power is turned on or the "RS" terminal turned off with the "AHD" terminal left turned on, the data held immediately before power-on or turning off the "RS" terminal will be used.

Item	Function code	Data	Description
Intelligent input [1] to [5] function	C001 to C005	65	AHD: Analog command hold

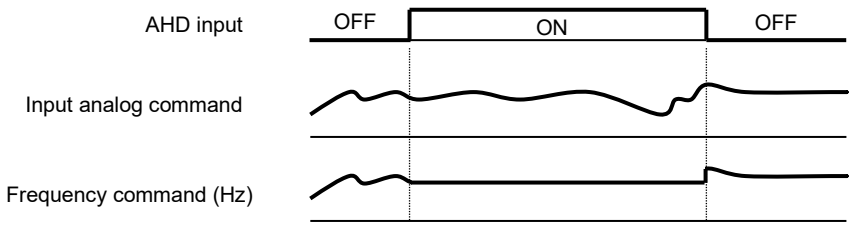

Note)
Frequency command remains when inverter is switched with "SET" terminal during "AHD" terminal is on. Turn "AHD" terminal off to re-hold the frequency command.

7.4.4 Analog Input Adjustment (C081)

This function can change the gain of the analog input. Please use the fine adjustment of the analog input signal. Please refer to subsection "7.4.5 Start/end frequency setting for external analog input" for the scale transformation.

Item	Function code	Range of data	Description
O/OI input gain calibration	C081	0.0 to 200.0 (%)	This function will fine-tune the gain for the analog input.

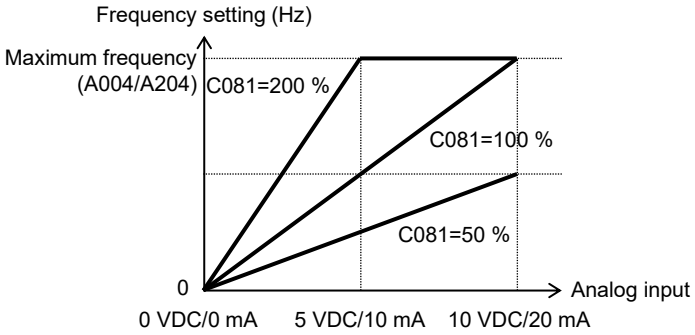

7.4.5 Start/end frequency setting for external analog input (A011 to A015,A161 to A165)

The start/end frequency setting function allows you to set the inverter output frequency in relation to the external analog inputs (frequency commands) via the following terminals:

- O/OI-L terminal: 0 to 10 VDC or 0 to 20 mA
- VR: volume of NES1-OP, OPE-SR/SRmini

Item	Function code	Range of data	Description
[O/OI] / [VR] input active range start frequency	A011/A161	0.00 to 400.0 (Hz)	Setting of the start frequency.
[O/OI] / [VR] input active range end frequency	A012/A162	0.00 to 400.0 (Hz)	Setting of the end frequency.
[O/OI] / [VR] input active range start ratio	A013/A163	0. to A014/A164 (%)	Setting of the rate of the start frequency to the external frequency command (0 to 10 VDC / 0 to 20 mA).
[O/OI] / [VR] input active range end ratio	A014/A164	A013/A163 to 100. (%)	Setting of the rate of the end frequency to the external frequency command (0 to 10 VDC / 0 to 20 mA).
[O/OI] / [VR] input start frequency enables	A015/A165	00	Externally input start frequency The frequency set as "A011/A161" is output as the output frequency while the start frequency rate is 0 % to the value set as "A013/A163".
		01	0 Hz 0 Hz is output as the output frequency while the start frequency rate is 0 % to the value set as "A013/A163".

If the voltage of the signal to be input to the O-L terminal is 0 to 5 VDC, specify 50 % for "A014".

(Example 1) "A015": 00

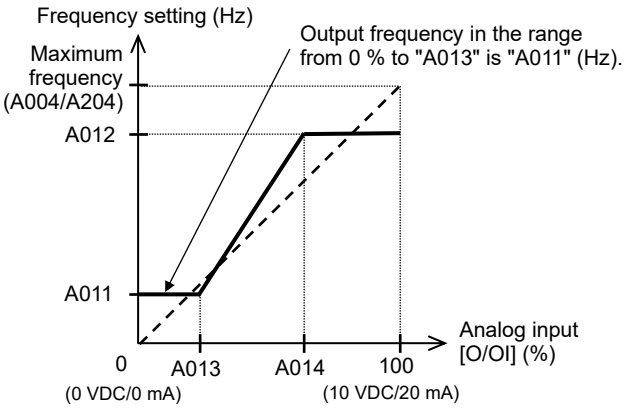

(Example 2) "A015": 01

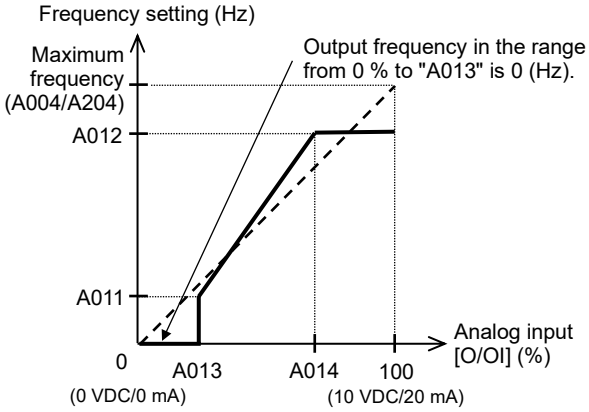

7.4.6 FM terminal (C027,C030,C105)

You can monitor the inverter output frequency and output current via the FM terminal on the control terminal B. The FM terminal is a pulse output terminal.

(1) FM signal selection

Select the signal to be output from the FM terminal among those shown in the table below.
If you select "03" (output frequency (pulse train)) or "08" (output current (pulse train)), connect a digital frequency counter to the FM terminal. To monitor other output signals, use an analog meter.

Item	Data	Description	Waveform	Scale range
C027	00	Output frequency	PWM	0 to maximum frequency (A004/A204) (Hz).
	01	Output current	PWM	0 to 200 %.
	03	Output frequency (*1)	Pulse train	0 to maximum frequency (A004/A204) (Hz).
	04	Output voltage	PWM	0 to 133 %. (The 100 % output voltage is equivalent to duty 75 % (i.e., 7.5 VDC) of full scale.)
	05	Input power	PWM	0 to 200 %.
	06	Electronic thermal load ratio	PWM	0 to 100 %.
	07	LAD frequency (*2)	PWM	0 to maximum frequency (A004/A204) (Hz).
	08	Output current	Pulse train	Refer to (3) below.
	10	Heatsink temperature	PWM	0 ºC to 200 ºC (0 ºC is output when the heatsink temperature is 0 ºC or less.).

(Example 1) Waveform: PWM

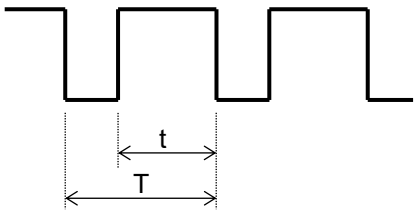

Cycle (T): Fixed (6.4 ms)
Duty (t/T): Varied

(Example 2) Waveform: Pulse train

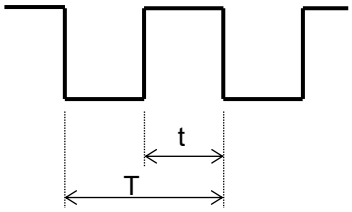

Cycle (T): Varied
Duty (t/T): Fixed (1/2)

(*1) When "b086" (frequency scaling conversion factor) is set, the value converted by gain is output.
(*2) LAD frequency: the linear acceleration / deceleration frequency

(2) FM terminal analog meter adjustment

Adjust the pulse voltage output gain for the external analog meter connected to the FM terminal.

Item	Function code	Range of data	Description
FM gain adjustment (for "C027=00,01,04,05,06,07,10")	C105	50. to 200. (%)	Setting of the gain for FM monitoring.

(3) Digital current monitoring

If the output current matches the digital current monitor reference value (C030), the FM terminal will output a signal indicating 1,440 Hz.

Item	Function code	Range of data	Description
Digital current monitor reference value	C030	(0.20 to 2.00) × Inverter rated current (A)	Setting of the current for 1,440 Hz output.

7.5 To drive the motor

7.5.1 V/f characteristic curve selection (A044/A244,b100 to b113)

The V/f characteristic curve selection function allows you to set the output voltage/frequency (V/f) characteristic. To switch the V/f characteristic curve selection among the 1st and 2nd motor controls, refer to subsection "7.5.21 2nd motor control function (SET)".

Function code	Data	V/f characteristic	Remarks
A044/A244	00	Constant torque characteristic (VC)	
	01	Reduced torque characteristic (1.7th power of VP)	Constant torque characteristic at low speed.
	02	Free V/f characteristic	

(1) Constant torque characteristic (VC)

With this control system set, the output voltage is in proportion to the output frequency within the range from 0 Hz to the base frequency. Within the output frequency range over the base frequency up to the maximum frequency, the output voltage is constant, regardless of the change in the output frequency.

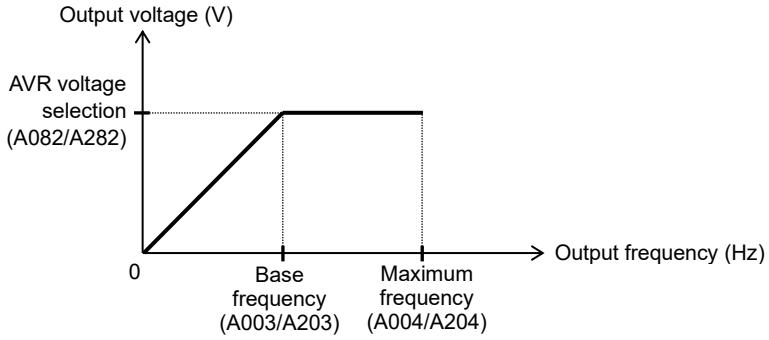

(2) Reduced torque characteristic (1.7th power of VP)

This control system is suited when the inverter is used with equipment (e.g., fan or pump) that does not require a large torque at a low speed.
Since this control system reduces the output voltage at low frequencies, you can use it to increase the efficiency of equipment operation and reduce the noise and vibrations generated from the equipment.
The V/f characteristic curve for this control system is shown below.

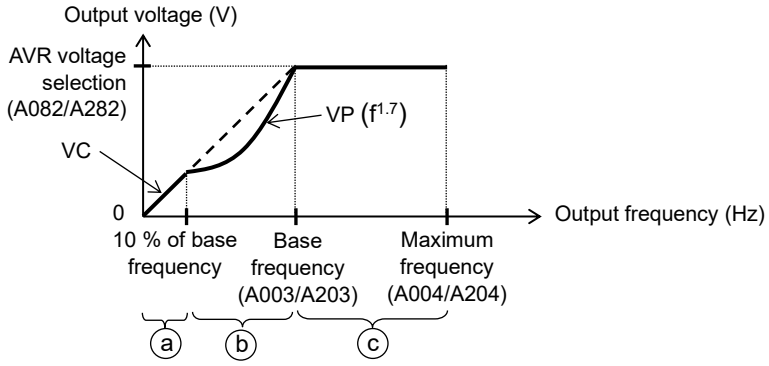

Period ⓐ : While the output frequency increases from 0 Hz to the 10 % of the base frequency, the output voltage follows the constant torque characteristic.
(Example) If the base frequency is 60 Hz, the constant torque characteristic is maintained within the output frequency range of 0 to 6 Hz.

Period ⓑ : While the output frequency increases from the 10 % of base frequency to the base frequency, the output voltage follows the reduced torque characteristic. In other words, the output voltage increases according to the 1.7th power of the output frequency.

Period ⓒ : While the output frequency increases from the base frequency to the maximum frequency, the output voltage is constant.

(3) Free V/f characteristic setting

The free V/f characteristic setting function allows you to set an arbitrary V/f characteristic by specifying the voltages and frequencies (b100 to b113) for the seven points on the V/f characteristic curve.
The free V/f frequencies (f1 to f7) set by this function must always be in the collating sequence of "f1 ≤ f2 ≤ f3 ≤ f4 ≤ f5 ≤ f6 ≤ f7".
Since all free V/f frequencies are set to 0 Hz as default (factory setting), specify their arbitrary values (begin setting with free V/f setting, frequency 7 (b112)). (The inverter cannot operate with the free V/f characteristic in the factory setting.)
Enabling the free V/f characteristic setting function disables the torque boost selection (A041/A241), base frequency (A003/A203), and maximum frequency (A004/A204). (The inverter assumes the value of free V/f setting, frequency 7 (b112) as the maximum frequency.)

Item	Function code	Data	Description
Free V/f setting, frequency 7	b112	b110 to 400. (Hz)	Setting of the output frequency at each breakpoint of the V/f characteristic curve.
Free V/f setting, frequency 6	b110	b108 to b112 (Hz)	
Free V/f setting, frequency 5	b108	b106 to b110 (Hz)	
Free V/f setting, frequency 4	b106	b104 to b108 (Hz)	
Free V/f setting, frequency 3	b104	b102 to b106 (Hz)	
Free V/f setting, frequency 2	b102	b100 to b104 (Hz)	
Free V/f setting, frequency 1	b100	0. to b102 (Hz)	
Free V/f setting, voltage 7	b113	0.0 to 300.0 (V): Selectable on 200 V class inverter models 0.0 to 600.0 (V): Selectable on 400 V class inverter models	Setting of the output voltage at each breakpoint of the V/f characteristic curve (*1).
Free V/f setting, voltage 6	b111		
Free V/f setting, voltage 5	b109		
Free V/f setting, voltage 4	b107		
Free V/f setting, voltage 3	b105		
Free V/f setting, voltage 2	b103		
Free V/f setting, voltage 1	b101		

(Example)

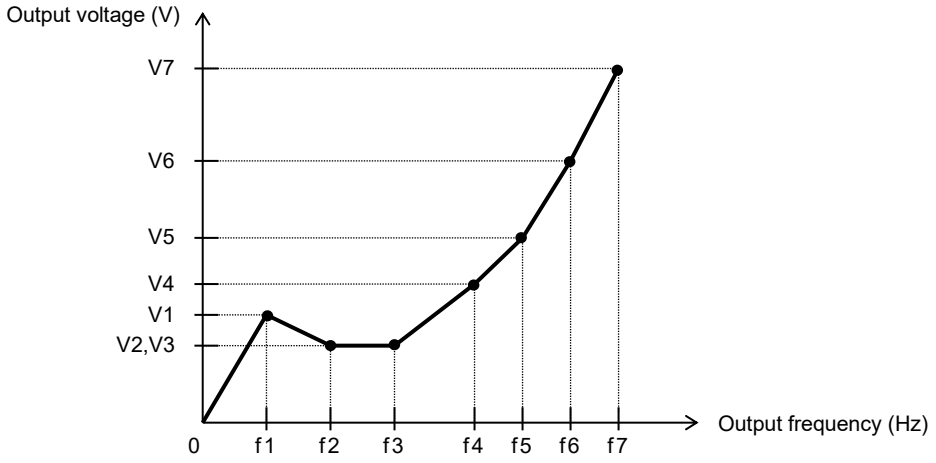

(*1) Even if the free V/f setting, voltage 1 to 7 can be set within 0 to 300 VDC (600 VDC), the inverter output voltage cannot exceed the inverter input voltage or the AVR voltage selection (A082/A282).
Carefully note that selecting an inappropriate control system (V/f characteristic) may result in overcurrent during motor acceleration or deceleration, or vibration of the motor or other machine driven by the inverter.

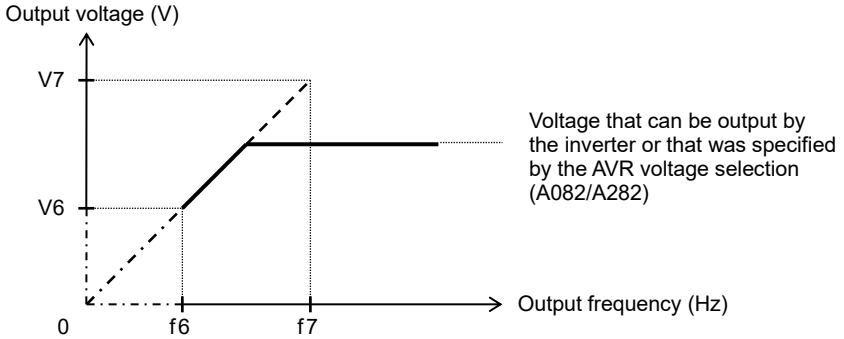

7.5.2 Torque boost setting (A041/A241,A042/A242,A043/A243,A046/A246,A047/A247,H003/H203,H004/H204)

The torque boost setting function allows you to compensate for the voltage drop due to wiring and the primary resistance of the motor so as to improve the motor torque at low speeds.
When you select automatic torque boost by the torque boost selection (A041/A241), adjust the settings of the motor capacity (H003/H203) and motor poles setting (H004/H204) based on the motor to be driven.

Item	Function code	Data or range of data	Description
Torque boost selection	A041/A241	00	Manual torque boost
		01	Automatic torque boost
Manual torque boost value	A042/A242	0.0 to 20.0 (%)	Setting of the rate of the boost to the AVR voltage selection (A082/A282).
Manual torque boost frequency	A043/A243	0.0 to 50.0 (%)	Setting of the rate of the frequency at breakpoint to the base frequency (A003/A203).
Motor capacity	H003/H203	0.10 to 5.50 (kW)	Selection of the motor capacity.
Motor poles setting	H004/H204	2 / 4 / 6 / 8 (poles)	Selection of the number of the motor poles.
Voltage compensation gain for automatic torque boost	A046/A246	0. to 255. (%)	See Item "(2) Automatic torque boost" below.
Slip compensation gain for automatic torque boost	A047/A247	0. to 255. (%)	See Item "(2) Automatic torque boost" below.

(1) Manual torque boost

The inverter outputs the voltage according to the settings of the manual torque boost value (A042/A242) and manual torque boost frequency (A043/A243).
Use the manual torque boost value (A042/A242) to specify the rate of the boost to the voltage (100 %) set by the AVR voltage selection (A082/A282).
When increasing the value of the manual torque boost value (A042/A242), be careful to prevent motor over-excitation. Over-excitation may result in motor burnout.
Use the manual torque boost frequency (A043/A243) to specify the rate of the frequency at each breakpoint to the base frequency (A003/A203) (100 %).
To switch the settings among the 1st and 2nd motor controls ("A041 to A043" and "A241 to A243"), refer to subsection "7.5.21 2nd motor control function (SET)".

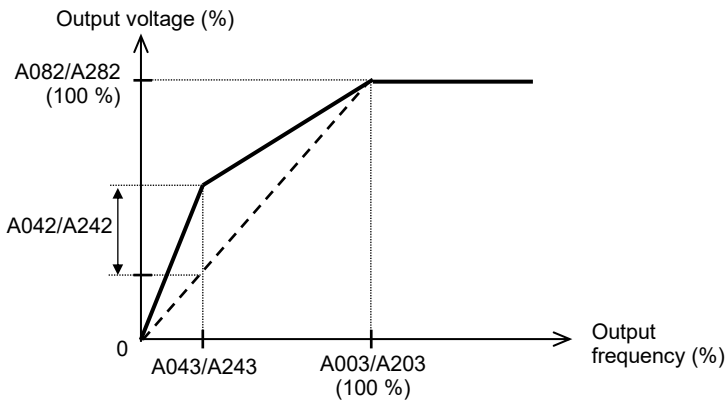

(2) Automatic torque boost

When automatic torque boost is selected by the torque boost selection (A041/A241=01), the inverter automatically adjusts the output frequency and voltage according to the load on the motor.
(During actual operation, the automatic torque boost is usually combined with the manual torque boost.)
When you select the automatic torque boost, adjust the settings of the motor capacity (H003/H203) and motor poles setting (H004/H204) according to the motor to be driven.
If the inverter trips due to overcurrent during motor deceleration, set the AVR function selection to always enable the AVR function (A081/A281=00).
If you cannot obtain the desired operation characteristic by using the automatic torque boost, make the following adjustments:

Symptom	Adjustment method	Adjustment item
Motor torque is insufficient at low speed. (The motor does not rotate at low speed.)	(1) Increase the voltage setting for manual torque boost step by step.	A042/A242
	(2) Increase the slip compensation gain for automatic torque boost step by step.	A047/A247
	(3) Increase the voltage compensation gain for automatic torque boost step by step.	A046/A246
	(4) Reduce the carrier frequency setting.	b083
The motor speed falls when a load is applied to the motor.	Increase the slip compensation gain for automatic torque boost step by step.	A047/A247
The motor speed increases when a load is applied to the motor.	Reduce the slip compensation gain for automatic torque boost step by step.	A047/A247
The inverter trips due to overcurrent when a load is applied to the motor.	(1) Reduce the voltage compensation gain for automatic torque boost step by step.	A046/A246
	(2) Reduce the slip compensation gain for automatic torque boost step by step.	A047/A247
	(3) Reduce the voltage setting for the manual torque boost value step by step.	A042/A242

7.5.3 3-wire input function (STA, STP, and F/R) (C001 to C005)

The 3-wire input function allows you to use automatic-reset contacts (e.g., push-button switches) to start and stop the inverter.
Specify "01" (control terminal) for the run command source (A002/A202).
Assign function "20" (STA), "21" (STP), and "22" (F/R) to three of the intelligent input terminal [1] to [5] functions (C001 to C005) to enable the control operations described below. Assigning the "STP" function to an intelligent input terminal disables the functions of the "FW" and "RV" terminals.
While the "STP" signal is OFF, the "STA" signal is invalid.

Item	Function code	Data	Description
Intelligent input [1] to [5] function	C001 to C005	20	STA: Starting the motor
		21	STP: Stopping the motor
		22	F/R: Switching the motor operation direction

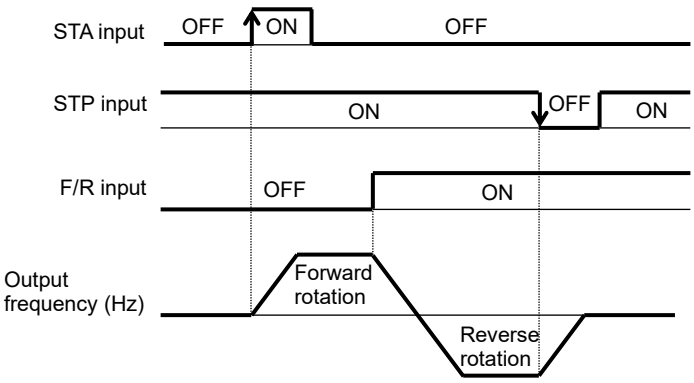

Note : In 3-wire input function, "STP" input is used at the b-contact, even if the setting of "STP" is the a-contact.

7.5.4 Start frequency setting (b082)

The start frequency setting function allows you to specify the inverter output frequency that the inverter initially outputs when an operation command is input.
Use this function mainly to adjust the start torque.
If the start frequency (b082) is set too high, the inverter will start the motor with a full voltage, which will increase the start current. Such status may trigger the overload restriction operation or make the inverter to easily trip because of overcurrent.

Item	Function code	Range of data	Description
Start frequency	b082	0.01 to 9.99 (Hz)	Setting of the start frequency.

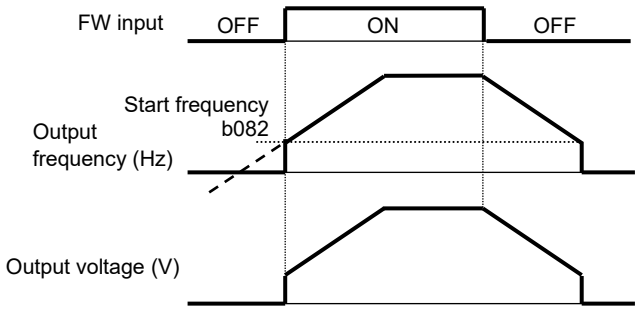

7.5.5 Reduced voltage start function (b036,b082)

The reduced voltage start function allows you to make the inverter increase the output voltage gradually when starting the motor.
Set a small value for the reduced voltage start selection (b036) if you intend to increase the start torque. On the other hand, setting a small value will cause the inverter to perform full-voltage starting, and to easily trip because of overcurrent.

Item	Function code	Range of data	Description
Reduced voltage start selection	b036	0	Disabling this function.
		1 to 250	1: Short (about 4 ms) ↕ 250: Long (about 1000 ms)

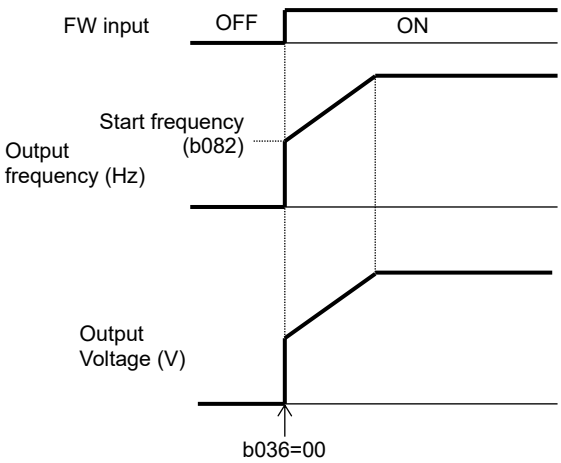

Reduced voltage start function: disabled

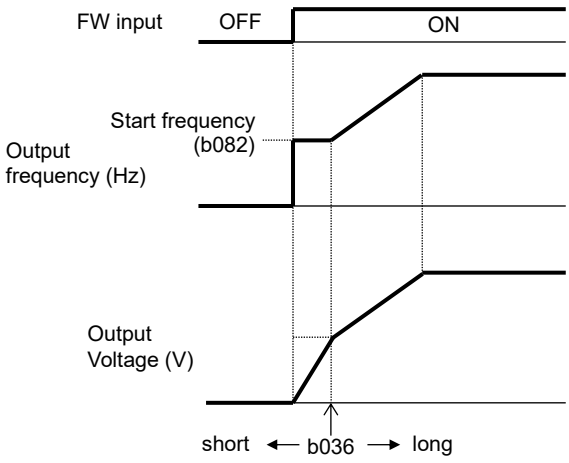

Reduced voltage start function: enabled

7.5.6 Jogging (JG) command setting (A038,A039,C001 to C005)

The jogging command setting function allows you to set and finely tune the motor-stopping position. To use this function, assign function "06" (JG) to one of the intelligent input [1] to [5] functions (C001 to C005).

(1) Jog frequency setting

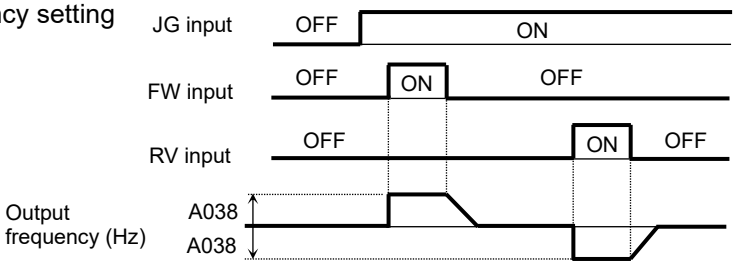

Since the jogging function does not use an acceleration ramp, the inverter can easily trip during the jogging operation. Adjust the jog frequency (A038) properly so that the inverter will not trip.

Item	Function code	Range of data	Description
Jog frequency	A038	Start frequency (b082) to 9.99 (Hz)	Setting of the frequency to output during jogging operation.

(2) Jog stop mode

Item	Function code	Data	Description
Jog stop mode	A039	00	Disabling jogging while the motor is operating, and enabling free-running when the motor is stopped.
		01	Disabling jogging while the motor is operating, and enabling stopping after deceleration when the motor is stopped.
		02 (Note 2)	Disabling jogging while the motor is operating, and enabling DC braking when the motor is stopped.
		03	Enabling jogging while the motor is operating, and enabling free-running when the motor is stopped.
		04	Enabling jogging while the motor is operating, and enabling stopping after deceleration when the motor is stopped.
		05 (Note 2)	Enabling jogging while the motor is operating, and enabling DC braking when the motor is stopped.

Note 1: To perform the jogging operation, always turn on the "JG" terminal before turning on the "FW" or "RV" terminals. (Follow this sequence of command inputs also when using the digital operator to enter operation commands.)

Note 2: You must set DC braking settings (refer to subsection "7.5.22 DC braking (DB) function") if you specify "02" or "05" for the jog stop mode (A039).

Note 3: Jogging frequency can be changed in the output frequency setting (F001) during jogging operation. The changed frequency setting is saved in "A038".

(Example 1)

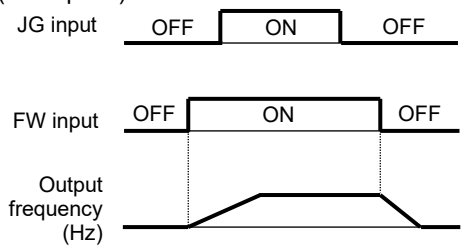

When "00", "01", or "02" is specified for the jog stop mode (A039), the jogging operation will not be performed if the "FW" signal is turned on earlier than the "JG" signal.

(Example 2)

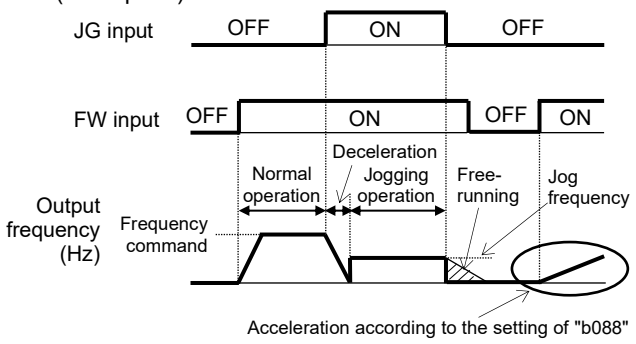

When "03", "04", or "05" is specified for the jog stop mode (A039), the jogging operation will be performed, even if the "FW" signal is turned on earlier than the "JG" signal. However, the motor will stop after free-running if the "JG" signal is turned off earlier than the "FW" signal.

7.5.7 Frequency limit setting (A061/A261,A062/A262)

The frequency limit setting function allows you to place upper and lower limits on the inverter frequency command. This function restricts the input of frequency commands that specify any frequencies outside the upper and lower limits. When the PID function is enable, this function limits the PID output.
Always set the upper limit before setting the lower limit. Also, be sure to keep the frequency upper limit (A061/A261) larger than the frequency lower limit (A062/A262). Make sure that upper/lower limit does not exceed the maximum frequency (A004/A204). Be sure to set the output frequency setting (F001) and the multi-speed frequency 1 to 7 (A021 to A027) between upper and lower limits.
If 0 Hz is set for the frequency upper/lower limits, they will not operate.

Item	Function code	Range of data	Description
Frequency upper limit	A061/A261	0.00, the frequency lower limit (A062/A262) to the maximum frequency (A004/A204) (Hz)	Setting of the upper limit of the frequency command.
Frequency lower limit	A062/A262	0.00, the start frequency (b082) to the frequency upper limit (A061/A261) (Hz)	Setting of the lower limit of the frequency command.

(Example) When the O/OI-L terminal is used for frequency command:

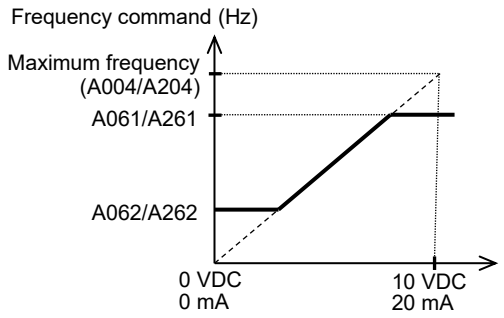

If 0 VDC or 0 mA is input as the frequency command, the inverter will output the frequency specified in "A062/A262".

7.5.8 Jump frequency function (A063 to A068)

The jump frequency function allows you to operate the inverter so that it avoids the resonant frequency of the machine driven by the inverter.
Since the inverter avoids the motor operation with a constant output frequency within the specified range of the frequencies to jump when the jump frequency function is enabled, you cannot set any inverter output frequency within the specified range of the frequencies to jump.
Note that, while the inverter is accelerating or decelerating the motor, the inverter output frequency changes continuously according to the set acceleration/deceleration time.
You can set up to three frequencies to jump.

Item	Function code	Range of data	Description
Jump frequency (center) 1 to 3	A063 / A065 / A067	0.00 to 400.0 (Hz) (*1)	Setting of the center frequency of the frequency range to be jumped.
Jump frequency width (hysteresis) 1 to 3	A064 / A066 / A068	0.00 to 10.00 (Hz)	Setting of the half bandwidth of the frequency range to be jumped.

(*1) Setting of 0.00 Hz disables the jump frequency function.

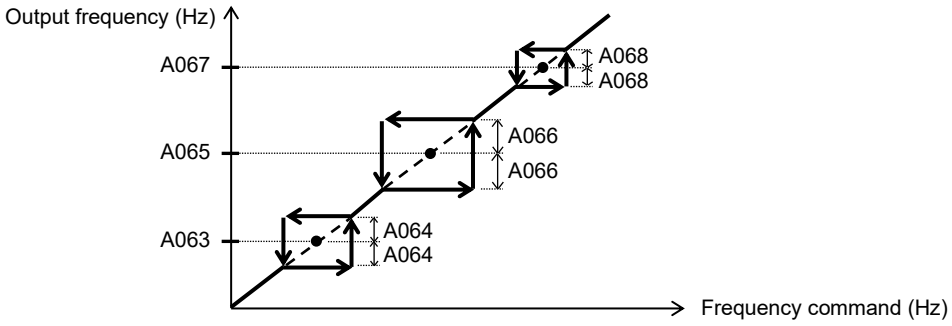

7.5.9 Acceleration/Deceleration hold frequency setting (A069,A070,A154,A155)

The acceleration/deceleration hold frequency setting function allows you to make the inverter wait, upon starting the motor, until the slipping of the motor becomes less when the load on the motor causes a large moment of inertia.
Use this function if the inverter has tripped because of overcurrent when starting the motor.
This function can operate with every acceleration/deceleration pattern, regardless of the setting of the acceleration/deceleration curve selection (A097/A098).
The method of this function has following two ways and can use both together.

1) by the setting parameter (A069, A070, A154, A155)
2) by the terminal function (HLD)

Item	Function code	Range of data	Description
Acceleration hold frequency	A069	0.00 to 400.0 (Hz)	Setting of the frequency at which to stop acceleration.
Acceleration hold time	A070	0.0 to 60.0 (s)	Setting of the length of time to stop acceleration.
Deceleration hold frequency	A154	0.00 to 400.0 (Hz)	Setting of the frequency at which to stop deceleration.
Deceleration hold time	A155	0.0 to 60.0 (s)	Setting of the length of time to stop deceleration.
Intelligent input [1] to [5] function	C001 to C005	83	HLD : Retain output frequency

(Example 1) By the setting parameter (A069, A070, A154, A155)

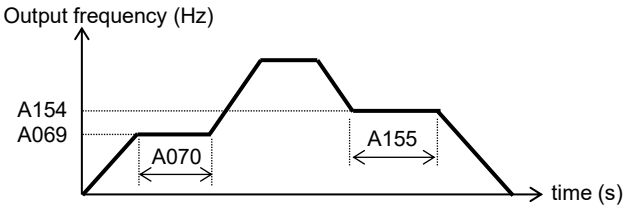

(Example 2) By the terminal function (HLD)

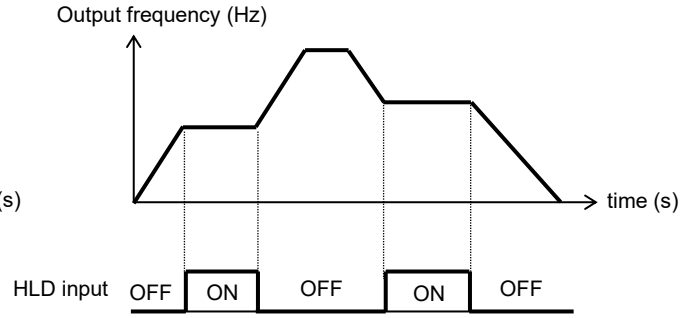

7.5.10 Permission of Run command function (ROK) (C001 to C005)

The Permission of Run command function allows you to make the run command to be valid or invalid.
While the "ROK" input is ON, the run command is valid.
To use this function, assign function "84" (ROK) to one of the terminal [1] to [5] functions (C001 to C005).

Item	Function code	Data	Description
Intelligent input [1] to [5] function	C001 to C005	84	ROK: Permission of Run command

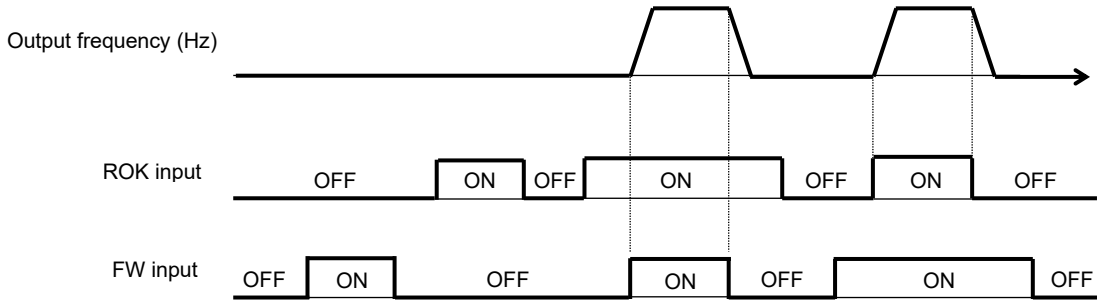

7.5.11 Multi-speed select setting (CF1 to CF3 and SF1 to SF3) (A019,A020/A220,A021 to A027,C001 to C005,C169)

The multi-speed select setting function allows you to set multiple motor speeds and switch among them by way of signal input via specified intelligent input terminals.
Multi-speed operation can be performed in two modes: binary operation mode (with up to 8 speeds) using three input terminals and bit operation mode (with up to 4 speeds) using three input terminals.

Item	Function code	Data	Description
Multi-speed operation selection	A019	00	Binary operation mode with up to 8 speeds.
		01	Bit operation mode with up to 4 speeds.
Multi-speed frequency 0 to 7	A020/A220 A021 to A027	0.00, start frequency (b082) to maximum frequency (A004/A204) (Hz)	Setting of the frequency as each speed.

(1) Binary operation mode

Assign functions "02" (CF1) to "04" (CF3) individually to the intelligent input [1] to [5] functions (C001 to C005) to make multi-speed 0 to 7 available for selection.
Specify the desired frequencies for speeds 1 to 7 by setting multi-speed frequency 1 to 7 (A021 to A027).
You can set speed 0 by using function "A020", "A220" or "F001" when you have specified the digital operator for the frequency source setting. You can set speed 0 by using the O/OI terminal when you have specified the control terminal for the frequency source setting.

Multispeed	CF3	CF2	CF1
Speed 0	OFF	OFF	OFF
Speed 1	OFF	OFF	ON
Speed 2	OFF	ON	OFF
Speed 3	OFF	ON	ON
Speed 4	ON	OFF	OFF
Speed 5	ON	OFF	ON
Speed 6	ON	ON	OFF
Speed 7	ON	ON	ON

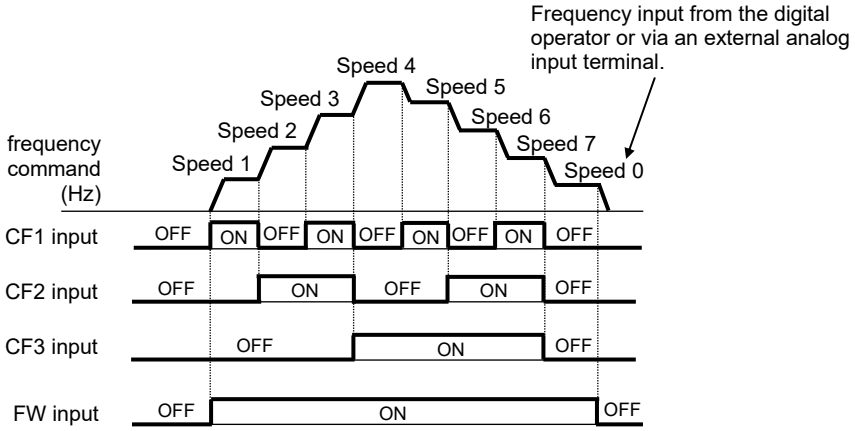

With multi-speed binary operation mode, you can use the multi-speed determination time (C169) to specify a delay to be set until the relevant terminal input is determined. (delay time = "C169" × 10 ms)
Use this specification to prevent the application of fluctuating terminal input before it is determined.
The input data is finally determined when terminal input becomes stable after the delay set as "C169".
(Note that a long determination time deteriorates the input terminal response.)

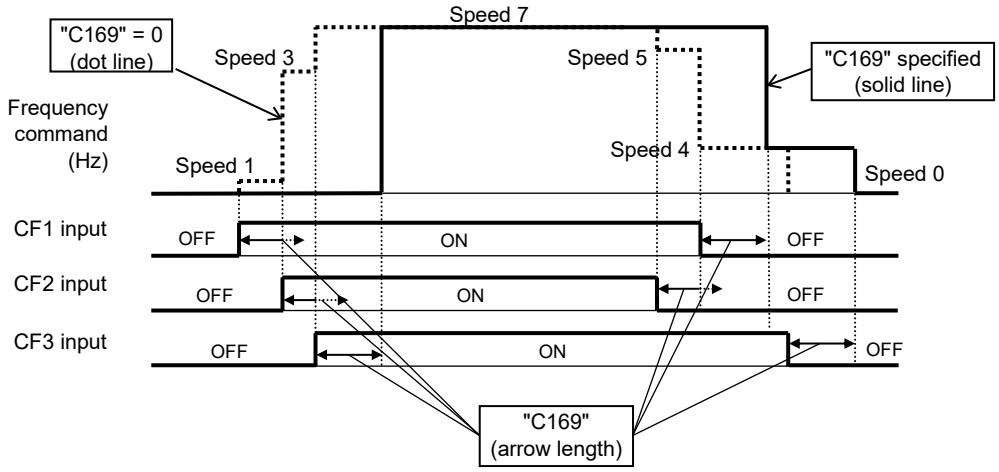

(2) Bit operation mode

Assign functions "32" (SF1) to "34" (SF3) individually to the intelligent input [1] to [5] functions (C001 to C005) to make multi-speed 0 to 3 available for selection.
Specify the desired frequencies for speeds 1 to 3 (SF1 to SF3) by setting multi-speed frequency 1 to 3 (A021 to A023).

Multispeed	SF3	SF2	SF1
Speed 0	OFF	OFF	OFF
Speed 1	×	×	ON
Speed 2	×	ON	OFF
Speed 3	ON	OFF	OFF

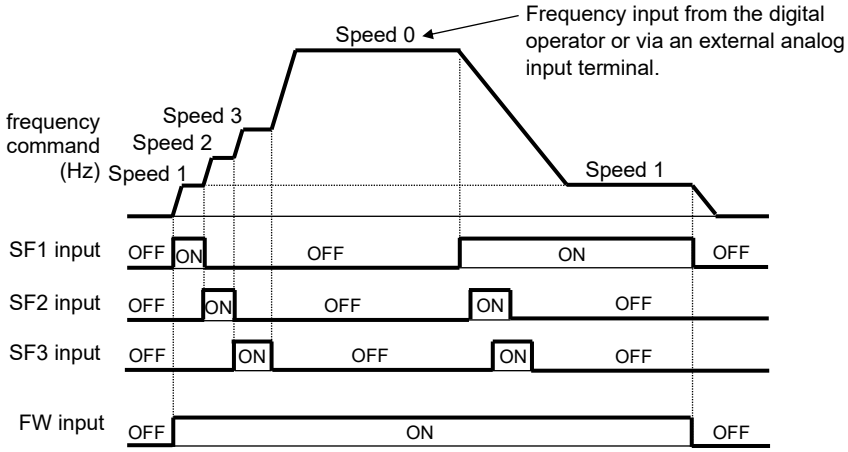

If two or more input terminals are turned on at the same time, the terminal given the smallest function number among them has priority over others. The "×" mark in the above table indicates that the speed can be selected regardless of whether or not the corresponding terminal is turned on.

7.5.12 Two-stage acceleration/deceleration function (2CH) (A092/A292 to A096/A296)

The two-stage acceleration/deceleration function allows you to change the acceleration or deceleration time while the inverter is accelerating or decelerating the motor.
Select one of the following three methods of changing the acceleration or deceleration time:

1) Changing the time by the signal input to an intelligent input terminal
2) Automatically changing the time when the output frequency reaches a specified frequency
3) Automatically changing the time only when switching the motor operation from forward rotation to reverse rotation, or vice versa

To change the acceleration/deceleration time by the signal input to an intelligent input terminal, assign function "09" (2CH) to one of the intelligent input [1] to [5] functions (C001 to C005).

Item	Function code	Data	Description
Acceleration time (2)	A092/A292	0.00 to 3600. (s)	(See examples 1 to 3.)
Deceleration time (2)	A093/A293	0.00 to 3600. (s)	(See examples 1 to 3.)
Selection method to switch to Acc2/Dec2 profile	A094/A294	00	Changing the time by the signal input to the "2CH" terminal. (See example 1.)
		01	Changing the time at the two-stage acceleration/deceleration frequency. (See example 2.)
		02	Valid only while the inverter is switching the motor between forward and reverse operations. (See example 3.)
Acc1 to Acc2 frequency transition point	A095/A295	0.00 to 400.0 (Hz)	Valid when "01" is specified for the selection method to switch to Acc2/Dec2 profile (A094/A294). (See example 2.)
Dec2 to Dec1 frequency transition point	A096/A296	0.00 to 400.0 (Hz)	Valid when "01" is specified for the selection method to switch to Acc2/Dec2 profile (A094/A294). (See example 2.)

(Example 1) When "00" is specified for "A094/A294".

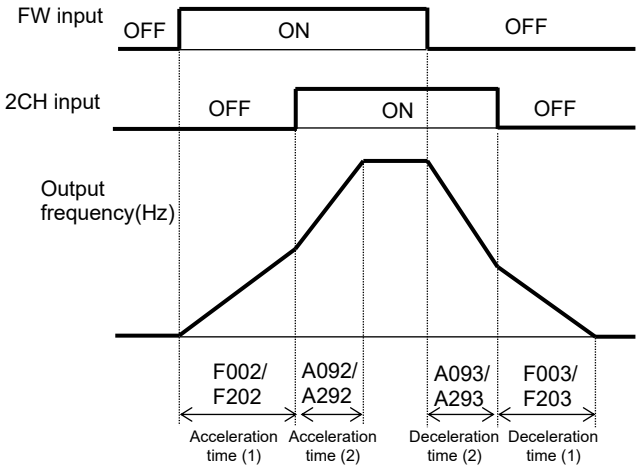

(Example 2) When "01" is specified for "A094/A294".

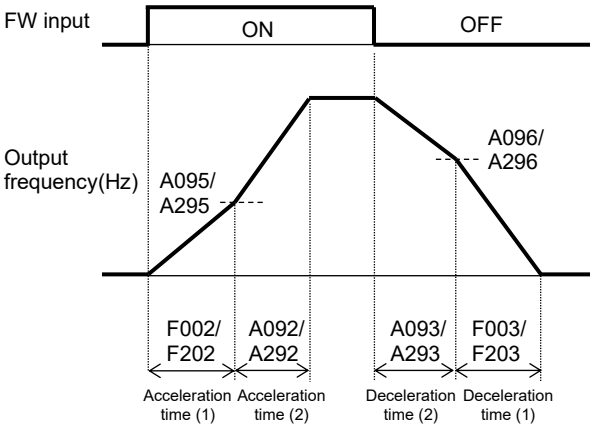

(Example 3) When "02" is specified for "A094/A294".

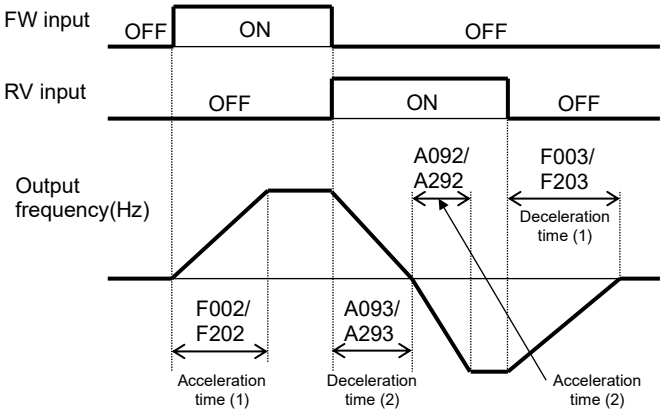

7.5.13 Acceleration/deceleration curve selection (A097,A098,A131,A132)

You can set different patterns of motor acceleration and deceleration according to the type of system to be driven by the inverter.
Use functions "A097" and "A098" to select acceleration and deceleration patterns, respectively.
You can individually set an acceleration pattern and a deceleration pattern.
When the acceleration/deceleration pattern is set other than 00 (linear), using analog input as frequency source is to be avoided because it prolongs the acceleration or deceleration time.

Item	Function code	Data or range of data	Description
Acceleration/deceleration curve selection	A097/A098	00	Linear acceleration/deceleration
		01	S-curve acceleration/deceleration
		02	U-curve acceleration/deceleration
		03	Inverse U-curve acceleration/deceleration
Acceleration/deceleration curve constant	A131/A132	01 to 10	01 (small degree of swelling) ⇕ 10 (large degree of swelling)

(1) Acceleration/deceleration pattern selection

Select acceleration and deceleration patterns with reference to the following table:

Setting	00	01	02	03
Curve	Linear	S-curve	U-curve	Inverse U-curve
A097 (accele-ration pattern)	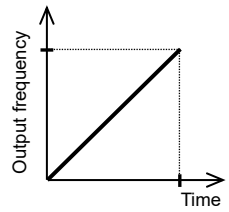	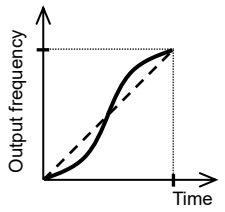	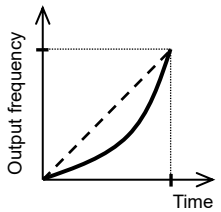	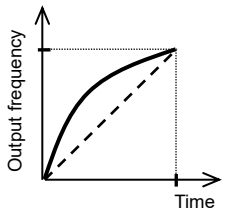
A098 (decele-ration pattern)	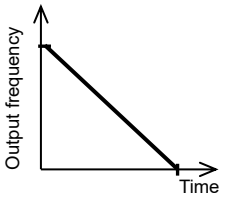	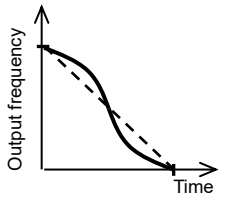	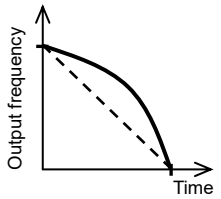	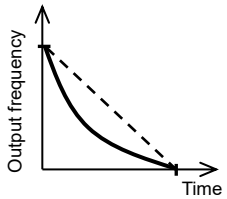
Descrip-tion	With this pattern, the motor is accelerated or decelerated linearly until its speed reaches the set output frequency.	This pattern is effective for preventing the collapse of cargo carried by a lift or conveyor driven by the inverter.	This pattern is effective for the tension control on a winding machine driven by the inverter (to prevent cutting of the object to be wound).	

(2) Curve constant (swelling degree)

Specify the swelling degree of the curve with reference to the following graphs (in case of acceleration):

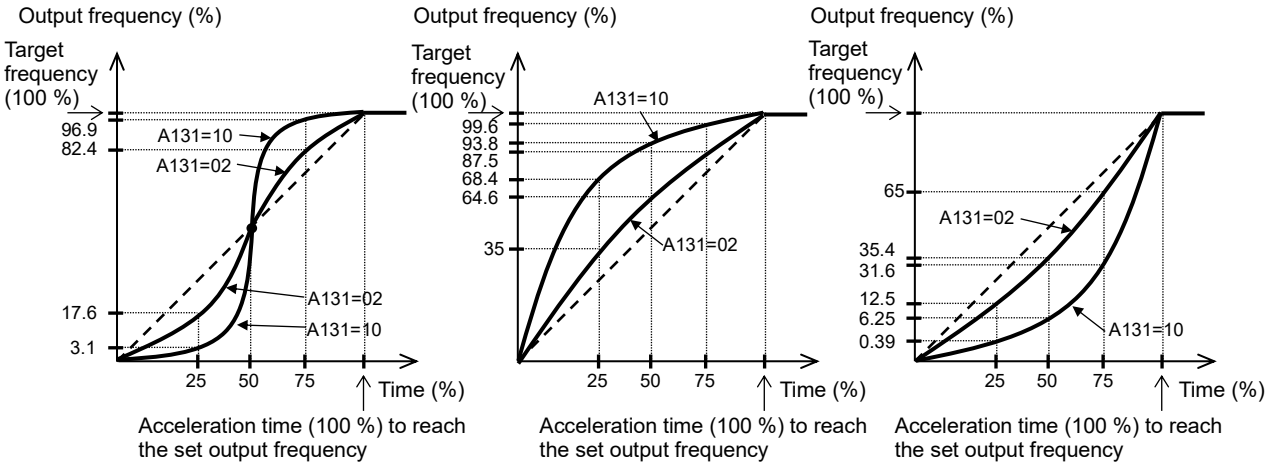

The acceleration or deceleration time may be shortened midway through the acceleration or deceleration according to the curve pattern.

7.5.14 Frequency calculation function (A141 to A143,A001/A201,A076)

The frequency calculation function allows you to use the result of an arithmetic calculation on two frequency commands as the actual frequency command or PV (Process Variable) data.
To use the calculation result as the actual frequency command, specify "10" for the frequency source (A001/A201).
To use the calculation result as the PV data, specify "10" for the PV source (A076).

Item	Function code	Data	Description
A/B input selection for calculate function	A141/A142	00	Operator (A020/A220)
		01	Volume VR on the operator (Valid only when NES1-OP, OPE-SR/SRmini is connected)
		02	Input via the O/OI terminal
		04	Input via the Modbus communication
Calculation symbol	A143	00	Addition: (A141) + (A142)
		01	Subtraction: (A141) - (A142)
		02	Multiplication: (A141) × (A142)
Frequency source	A001/A201	10	Output of calculation result
PV source	A076	10	Output of calculation result

Note 1: Remote control function (refer to subsection "7.5.16 Remote control function (UP and DWN)") is ineffective when the frequency calculation function is enabled. Also, the frequency displayed by the output frequency monitoring (d001), Scaled output frequency monitoring (d007), or output frequency setting (F001) cannot be changed with △ or ▽ key operations (refer to subsection "7.1.1 Output frequency monitoring").

Note 2: The settings of "A141" and "A142" can be the same.

7.5.15 Frequency addition function (A145,A146,C001 to C005)

The frequency addition function allows you to add or subtract the value specified as the ADD frequency (A145) to or from the frequency value of a selected frequency command.
To use this function, assign function "50" (ADD) to one of the intelligent input [1] to [5] functions (C001 to C005). When the "ADD" terminal is turned on, the inverter performs the addition or subtraction of the value specified as "A145".

Item	Function code	Data or range of data	Description
ADD frequency	A145	0.00 to 400.0 (Hz)	Setting of the frequency to be added.
ADD direction selection	A146	00	(Frequency command) + (A145)
		01	(Frequency command) - (A145)
Intelligent input [1] to [5] function	C001 to C005	50	The trigger for adding the frequency "A145".

Note 1: If the sign of the frequency value in the frequency command changes from minus (-) to plus (+), or vice versa, as the result of frequency addition, the motor operation direction will be inverted.
Note 2: When the PID function is used, the frequency addition function can apply to PID target data. (In such cases, the "A145" display is in percentage which the PID target data as 100.00 % [in steps of 0.01 %].)

7.5.16 Remote control function (UP and DWN) (C101,C104,C001 to C005)

The remote control function allows you to change the inverter output frequency by operating the UP and DWN intelligent input terminals. To use this function, assign functions "27" (UP) and "28" (DWN) to two of the intelligent input [1] to [5] functions (C001 to C005).
This function is only effective when "01" (control terminal) or "02" (operator) has been specified for the frequency source (A001/A201) or the multi-speed function is valid. If "01" (control terminal) has been specified, this function is only effective when the analog command holding function (AHD) is enabled.
This function cannot be used to set frequencies for jogging operation.
When the "UP" or "DWN" terminal is on, the 1st and 2nd acceleration/deceleration time follows the settings of "F002/F202" / "F003/F203". To switch between the 1st and 2nd motor controls, refer to subsection "7.5.21 2nd motor control function (SET)".
You can store the frequency settings adjusted using this function.
Set "01" (enable) on "C101" to store the frequency settings.
In case of the "C101=00", the frequency command returns to a value at the time of the power supply injection when inverter is the undervoltage state.
You can also clear the stored frequency settings. Assign function "29" (UDC) to one of the intelligent input [1] to [5] functions (C001 to C005), and turn on the "UDC" terminal to clear the frequency settings adjusted with the "UP" and "DWN" signals. In this case, the value obeys setting of "C104".

Item	Function code	Data	Description
Intelligent input [1] to [5] function	C001 to C005	27	UP: Remote control UP function
		28	DWN: Remote control DOWN function
		29	UDC: Remote control data clearing
Up/Down memory mode selection	C101	00	Disabling the storage of frequency settings
		01	Enabling the storage of frequency settings (*1)
UP/DWN clear mode	C104	00	0 Hz
		01	Memory data when power supply is turned on.

(*1) Do not operate the "UP" / "DWN" terminal or the operator's △/▽ key after the inverter power is shut off. Also, do not perform the "UP" / "DWN" terminal operation and the operator's △/▽ key operation at the same time after the inverter power is shut off. Otherwise, the frequency settings may not be stored correctly.

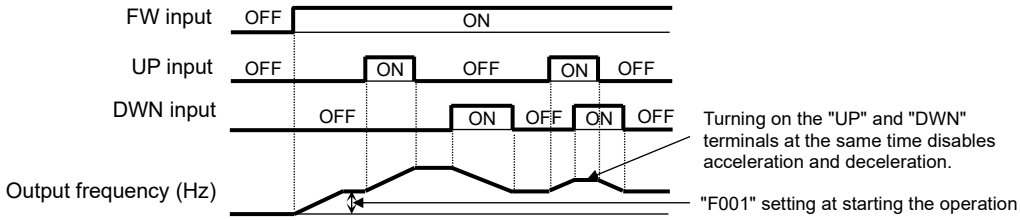

7.5.17 V/f gain setting (A045/A245,A082/A282)

The V/f gain setting function allows you to change the inverter output voltage by specifying the rate of the output voltage to the voltage (100 %) selected with the AVR voltage selection (A082/A282).
If the motor operation is cranky, try to decrease the gain setting.

Item	Function code	Range of data	Description
V/f gain	A045/A245	20. to 100. (%)	Setting of the rate of reducing the output voltage.

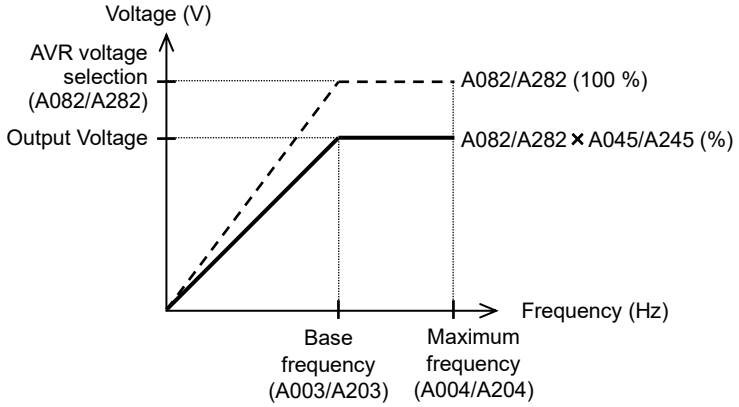

7.5.18 PID function (A071 to A078,A156 to A158,C044,C052,C053)

The PID function allows you to use the inverter for the process control on fluid flow, airflow, and pressure.
To enable this function, specify "01" or "02" for PID enable (A071).
You can disable the PID function with an external signal during the PID operation. For this purpose, assign function "23" (PID: PID disabled) to one of the intelligent input [1] to [5] functions (C001 to C005).
Turning the "PID" terminal on disables the PID function and makes the inverter perform the normal output.
With the PID function, you can limit the PID output according to various conditions.
(Maximum frequency (refer to subsection "7.2.9 Maximum frequency setting"), frequency limiter (refer to subsection "7.5.7 Frequency limit setting"), PID variation range (A078).)

Item	Function code	Data or range of data	Description
PID enable	A071	00	Disabling the PID operation
		01	Enabling the PID operation
		02	Enabling the PID operation with reverse output
PID proportional gain	A072	0.00 to 25.00	Proportional gain
PID integral time constant	A073	0.0 to 3600. (s)	Integrated gain
PID derivative time constant	A074	0.00 to 100.0 (s)	Derivative gain
PV scale conversion	A075	0.01 to 99.99	Scale for unit conversion of PV data
PV source	A076	01	O/OI-L: [0 to 10 VDC] / [4 to 20 mA]
		02	Modbus communication
		10	Calculation result (*1)
Reverse PID action	A077	00	PID input = SP-PV (SP: PID target value)
		01	PID input = -(SP-PV) (SP: PID target value)
PID variation range	A078	0.0 to 100.0 (%)	Range of PID data variation with reference to the target value
PID sleep function action threshold	A156	0.00 to 400.0 (Hz)	When PID output drops below the operating level, to stop the output.
PID sleep function action delay time	A157	0.0 to 25.5 (s)	Delay time for the PID sleep function to start.
PID sleep function return threshold	A158	0.00 to 400.0 (Hz)	Returning level for PID sleep function
PID deviation level	C044	0.0 to 100.0 (%)	Level to determine the "OD" signal output
PV comparison signal output high limit	C052	0.0 to 100.0 (%)	Level to determine the "FBV" signal output turning off.
PV comparison signal output low limit	C053	0.0 to 100.0 (%)	Level to determine the "FBV" signal output turning on.
Intelligent input [1] to [5] function	C001 to C005	23	PID: PID Disable
		24	PIDC: PID Reset
Intelligent output [11] function	C021	04	OD: Output Deviation for PID Control
Intelligent relay function	C026	31	FBV: PID Second Stage Output

(*1) Refer to subsection "7.5.14 Frequency calculation function".
(Note) Do not set the analog input filter (A016) to 31 (500 ms fixed filter) when using PID function. There is a risk of unstable PID operation.

(1) Basic configuration of PID control

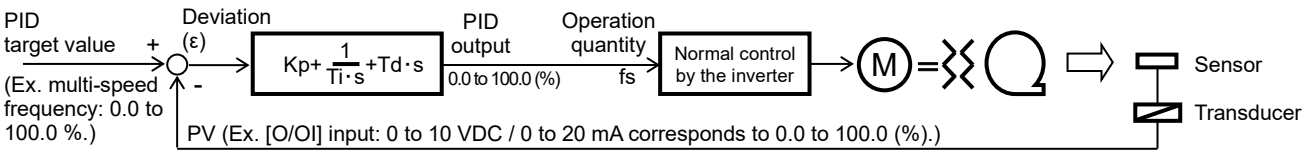

PID target value, PV, PID output: 0.0 to 100.0 (%)
Operation quantity (fs) is converted from PID output, and it is used in normal control by the inverter.
(The Operation quantity (fs) range "0 to maximum frequency (A004/A204) (Hz)" is corresponded to the PID output range "0.0 to 100.0 (%)".)

Kp: Proportional gain (A072), Ti: Integral time (A073), Td: Derivative time (A074),
s: Operator, ε : Deviation, PV: Process Variable (PID feedback)

(2) PID operation

1) P operation

This is an operation that the operation quantity is proportional to the deviation between SP and PV.

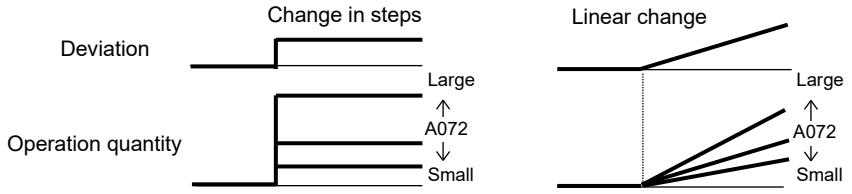

2) I operation

This is an operation that the operation quantity is proportional to the time integral value of the deviation between SP and PV.

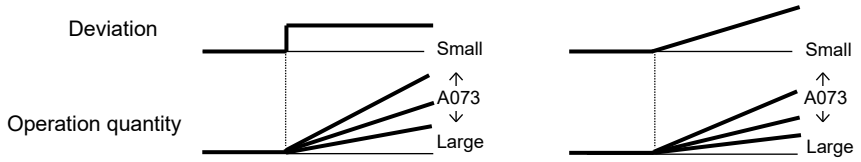

3) D operation

This is an operation that the operation quantity is proportional to the change of the deviation between SP and PV.

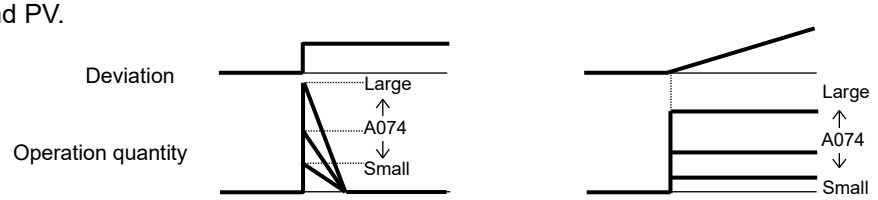

The PI operation is a combination of the P operation 1) and I operation 2). The PD operation is a combination of the P operation 1) and D operation 3). The PID operation is a combination of the P operation 1), I operation 2), and D operation 3).

(3) PID scale

The display of the function codes in the below table is scaled by the following equation:

(The converted value) = (Value before conversion) × (A075)

d004	F001	A011	A012	A020	A220	A021
A022	A023	A024	A025	A026	A027	A145

(4) PV source setting

Select the PV source to be used for the PID feedback signal with the PV source (A076).
Specify the PID target value in the range 0.0 to 100.0 (%) according to the frequency source (A001/A201) other than the PV source (A076). When the digital operator is used, the parameter related to the frequency command such as "F001" is to be the PID target value (setting range: 0.0 to 100.0 (%)).
When you specify the "02" (Modbus communication) for the PV source (A076), transfer data as described below.
Write the setting data (on the assumption that "10000" indicates 100.00 %) to register address "0006h".

Register No.	Function name	Function code	Readable/writable (R/W)	Monitored data or setting	Data resolution
0006h	PID feedback	–	R/W (*1)	0 to 10000	0.01 (%)

(*1) This register is readable and writable. However, this register can be read only when Modbus communication has been specified for PV source (A076=02). It cannot be read with other settings.

(5) Output of inverted PID deviation

Some sensor characteristics may cause the polarity of the deviation of PV from the target value to be inconsistent with the inverter frequency command. If the inconsistency occurs, specify "01" for the reverse PID action (A077) to invert the polarity of the deviation.

(Example) When controlling the compressor for a refrigerator
Assume that the temperature and voltage specifications of the temperature sensor are - 20°C to + 100°C and 0 to 10 VDC and the target value is 0°C.
If the current temperature is 10°C and the inverter is under the normal type of PID control, the inverter will reduce the output frequency because the PV is larger than the target value.

→ In such a case, specify "01" for the reverse PID action (A077) to invert the PV deviation. Then, the inverter will increase the output frequency.

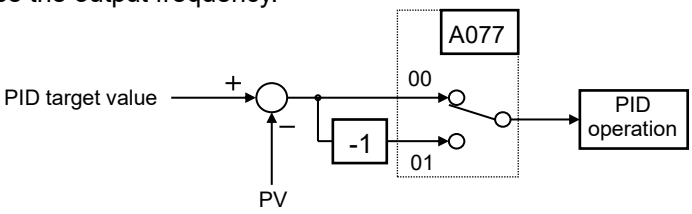

(6) Limitation on PID variation range

You can limit the PID output to within a specific range with reference to the PID target value.
To use the PID variation limit function, set the PID variation range (A078).
(Set a value on the assumption that the maximum frequency corresponds to 100.0 %.)
The variation of PID output is limited within ± "A078" % from the PID target value.
Setting "0.0" for the PID variation range (A078) disables the PID variation limit function.

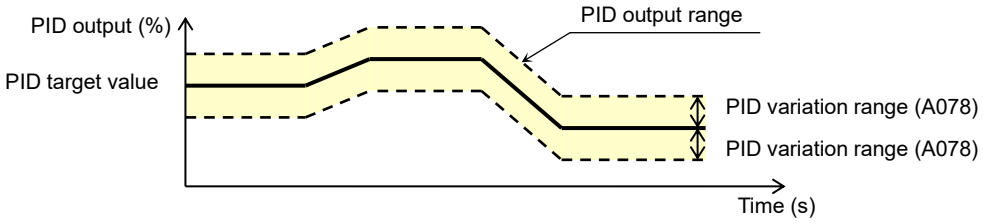

(7) Output of inverted PID deviation

If the inverter is under the normal PID control and the PID operation result is a negative value, the frequency command to the inverter will be limited to 0 Hz. However, when "02" (enabling the PID operation with reverse output) is set for the PID enable (A071), the PID operation result to be output to the inverter is inverted if the result is a negative value.
Setting "02" for function "A071" disables the PID variation limit function described above.

(8) PID gain adjustment

If the inverter response is unsteady when the PID control function is used, try to adjust gain settings as follows:

- If the PV does not quickly follow the change in the target value.
  → Increase the PID proportional gain (A072).
- If the PV is unstable although it quickly follows the change in the target value.
  → Reduce the PID proportional gain (A072).
- If considerable time is required until the PV matches the target value.
  → Reduce the PID integral time constant (A073).
- If the PV fluctuates unsteadily.
  → Increase the PID integral time constant (A073).
- If the inverter response is slow even after the P gain is increased.
  → Increase the PID derivative time constant (A074).
- If the PV becomes fluctuant and unsteady when the P gain is increased.
  → Reduce the PID derivative time constant (A074).

(9) Maximum PID deviation output (OD)

You can set the PID deviation level (C044) for PID control. When the PID deviation (ε) exceeds the level set as "C044", the "OD" signal can be output to an intelligent output terminal.
A value from 0.0 % to 100.0 % can be set as the level "C044".
To use this output function, assign function "04" (OD) to the intelligent output [11] function (C021) or the intelligent relay function (C026).

(10) PV comparison signal

PV comparison signal can be output to an intelligent output terminal when the PV exceeds the specified range.
To use this signal output function, assign function "31" (FBV) to the intelligent output [11] function (C021) or the intelligent relay function (C026).

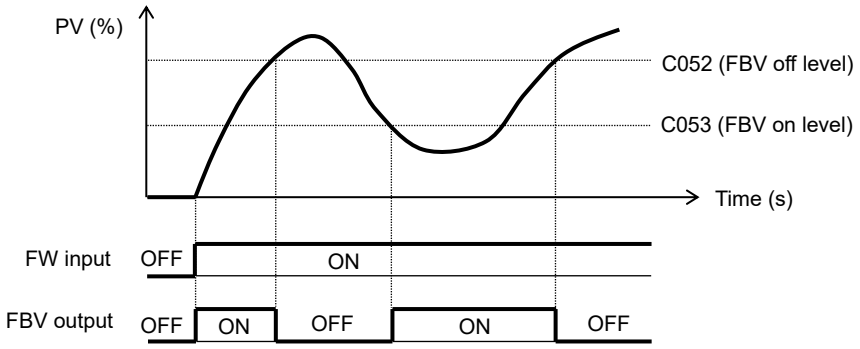

(11) Process variable (PV) monitoring (d004)

You can monitor the PV data on the inverter.
When you set a PV scale conversion (A075), the value to be displayed at "d004" can be the product of the PV and the scale.

"d004" = "PV (%)" × "PV scale conversion (A075)"

(12) Reset of PID integration (PIDC)

The PID integration reset function clears the integral result of PID operation.
To use this function, assign function "24" (PIDC) to one of the intelligent input [1] to [5] functions (C001 to C005).
The integral result is cleared each time the "PIDC" terminal is turned on.
Never turn on the "PIDC" terminal during the PID operation. Otherwise, the inverter may trip because of overcurrent. Be sure to disable the PID function before turning on the "PIDC" terminal.

(13) PID sleep function

If the operation quantity (fs) is below the PID sleep function action threshold (A156), it stops the output after the PID sleep function action delay time (A157). If the operation quantity (fs) is above the "A156", it start the output after the "A157". If the operation quantity (fs) returns within "A157", PID sleep function doesn't work.
PID sleep function return threshold (A158) should set higher than "A156".
Even if the PID function is disabled, when the frequency command value is below the "A156", it stops the output after "A157". When the frequency command value is above "A158", it start the output after "A157".
When using this function, please do not use the "FRS" input terminal function and set the stop mode selection is deceleration stop (b091=00).

7.5.19 Energy-saving operation (A085,A086)

The energy-saving operation function allows you to automatically minimize the inverter output power while the inverter is driving the motor at constant speed. This function is suited to operate a fan, pump, or other load that has a reduced torque characteristic.
To use this function, specify "01" for the energy-saving operation mode (A085).
Use the energy-saving mode tuning (A086) to adjust the response and accuracy of the energy-saving operation.
The energy-saving operation function controls the inverter operation comparatively slowly. Therefore, if a sudden change in the load occurs (e.g., impact load is applied), the motor may stall, and consequently, the inverter may trip because of overcurrent.
When the frequency source is control terminal (A001/A201=01), this function may not operate the inverter sufficiently. In this case, please set the analog input filter to 500 ms fixed filter with ± 0.1 Hz hysteresis (A016=31).

Item	Function code	Data	Description
Energy-saving operation mode	A085	00	Normal operation
		01	Energy-saving operation

Item	Function code	Data	Response	Accuracy
Energy-saving mode tuning	A086	0.0 (%) ↕ 100.0 (%)	Slow ↕ Quick	High ↕ Low

7.5.20 Stabilization constant setting (H006/H206,A045/A245,b083)

The stabilization constant setting function allows you to adjust the inverter to stabilize the motor operation when the motor operation is unstable.
If the motor operation is unstable, check the motor capacity (H003/H203) and motor poles setting (H004/H204) to determine whether the settings match the motor specifications. If they do not match, readjust the settings.
As an adjustment guide, if the inverter is driving a motor of which the capacity is lower than the inverter rating, try to increase the setting of "H006/H206" step by step. Try to reduce the setting of "H006/H206" if the inverter is driving a motor of which the capacity is higher than the inverter rating.
You can also use the following methods to stabilize the motor operation:

1) Reducing the carrier frequency (b083)
2) Reducing the V/f gain (A045/A245)

Item	Function code	Data	Description
Motor stabilization constant	H006/H206	0. to 255. (%)	Increase or reduce the setting to stabilize the motor.
V/f gain	A045/A245	20. to 100. (%)	Reduce the setting to stabilize the motor.
Carrier frequency	b083	2.0 to 15.0 (kHz)	Reduce the setting to stabilize the motor.

7.5.21 2nd motor control function (SET) (C001 to C005)

The 2nd motor control function allows you to switch the inverter settings to control two different types of motors. To use this function, assign function "08" (SET) to one of the intelligent input [1] to [5] functions (C001 to C005). Turn the "SET" terminal ON and OFF for switching. (OFF: 1st motor, ON: 2nd motor)

Item	Function code	Data	Description
Intelligent input [1] to [5] function	C001 to C005	08	SET: Set 2nd motor data

You can switch the following functional settings with the "SET" terminal:

F002/F202: Acceleration time (1)
F003/F203: Deceleration time (1)
A001/A201: Frequency source
A002/A202: Run command source
A003/A203: Base frequency
A004/A204: Maximum frequency
A020/A220: Multi-speed frequency 0
A041/A241: Torque boost selection
A042/A242: Manual torque boost value
A043/A243: Manual torque boost frequency
A044/A244: V/f characteristic curve
A045/A245: V/f gain
A046/A246: Voltage compensation gain for automatic torque boost
A047/A247: Slip compensation gain for automatic torque boost
A061/A261: Frequency upper limit
A062/A262: Frequency lower limit
A081/A281: AVR function selection
A082/A282: AVR voltage selection
A092/A292: Acceleration time (2)
A093/A293: Deceleration time (2)
A094/A294: Selection method to switch to Acc2/Dec2 profile
A095/A295: Acc1 to Acc2 frequency transition point
A096/A296: Dec2 to Dec1 frequency transition point
b012/b212: Level of electronic thermal (calculated within the inverter from current output)
b013/b213: Electronic thermal characteristic
b021/b221: Overload restriction operation mode
b022/b222: Overload restriction level
b023/b223: Deceleration rate at overload restriction
C041/C241: Overload warning level
H003/H203: Motor capacity
H004/H204: Motor poles setting
H006/H206: Motor stabilization constant

Since the inverter indicates no distinction among the 1st and 2nd motor controls, confirm 1st or 2nd motor control settings with the ON/OFF states of the "SET" terminal.
Please perform the change during the inverter and the motor is stopped.
This function is effective during an inverter stop.

7.5.22 DC braking (DB) function (A051 to A059,C001 to C005)

The DC braking function allows you to apply DC braking to the motor according to the load on the motor. You can control DC braking in two ways: the external control through signal input to intelligent input terminals and the internal control to be performed automatically when the motor is started and stopped. Note that the motor cannot be stopped by DC braking if the load on the motor produces a large moment of inertia.

Item	Function code	Data or range of data	Description
DC braking enable	A051	00	Internal DC braking is disabled.
		01	Internal DC braking is enabled. (when the inverter starts and stops.)
		02	Internal DC braking is enabled. (when the frequency command is equal or less than "A052".)
DC braking frequency	A052	0.00 to 60.00 (Hz)	With internal DC braking enabled, DC braking is performed when the frequency command is less than this setting frequency.
DC braking wait time	A053	0.0 to 5.0 (s)	The DC braking wait time specifies the delay in starting DC braking after the set braking frequency has reached or the "DB" terminal has been turned on.
DC braking force for deceleration / DC braking force at start	A054/A057	0. to 100. (%)	"0." specifies the smallest force (zero current), "100." specifies the largest force (rated current).
DC braking time for deceleration	A055	0.0 to 10.0 (s)	This setting is valid for the external DC braking in edge mode or for the internal DC braking.
DC braking / edge or level detection for [DB] input	A056	00	Edge detection (See examples 1-a to 6-a).
		01	Level detection (See examples 1-b to 6-b).
DC braking time at start	A058	0.0 to 10.0 (s)	This setting is valid for the internal DC braking. DC braking is started when the run command is input.
Carrier frequency during DC braking	A059	2.0 to 15.0 (kHz)	Carrier frequency at the DC braking
Intelligent input [1] to [5] function	C001 to C005	07	DB: External DC braking

(1) Carrier frequency during DC braking

Use the carrier frequency during DC braking (A059) to specify the carrier frequency for DC braking. But the braking force is reduced automatically when "A059" is set to 5.0 kHz or more. For detailed decreasing ratio, refer to the diagram "DC braking force limiter" below.

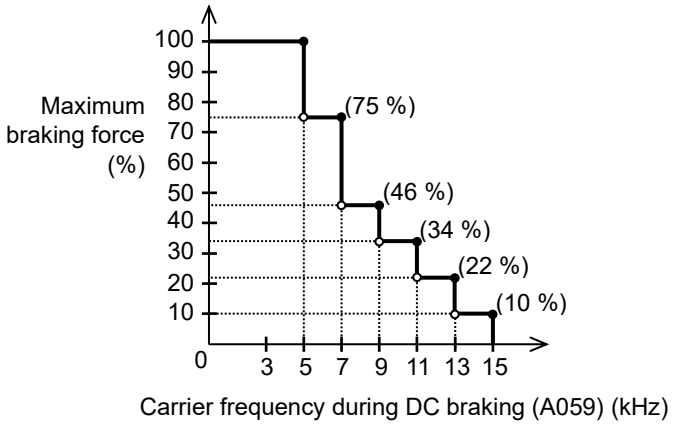

DC braking force limiter

(2) External DC braking

Assign function "07" (DB) to one of the intelligent input [1] to [5] functions (C001 to C005).
DC braking is controlled by ON/OFF of "DB" terminal when the setting of DC braking enable (A051) is "00" (Disabled) and "01" (Enabled during stop).
Adjust the braking force by adjusting the DC braking force for deceleration (A054).
When you set the DC braking wait time (A053), the inverter output will be shut off for the set period of delay, and the motor will be free-running during the period. DC braking will be restarted after the delay.
When setting the DC braking time with function "A055" or for the DC braking operation via the "DB" terminal, determine the length of time in consideration of the heat generation on the motor.
Select the braking mode by the DC braking / edge or level detection for [DB] input (A056), and then make any other necessary settings suitable for your system.

(a) Edge mode (A056=00)	(b) Level mode (A056=01)
(Example 1-a) When the inverter is running: 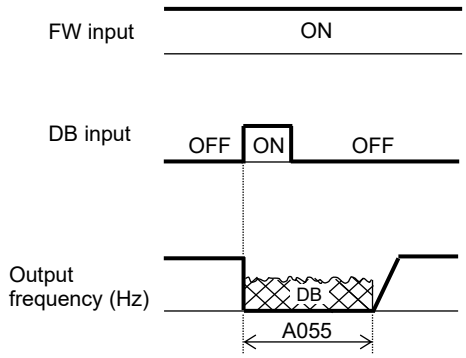	(Example 1-b) When the inverter is running: 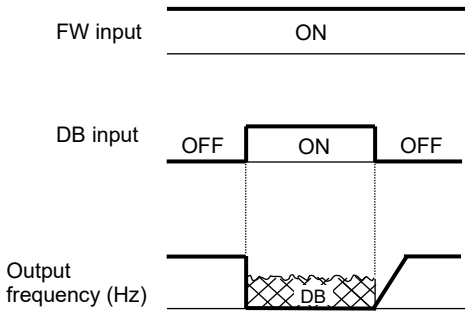
(Example 2-a) When the inverter is decelerating and "A053=0.0": 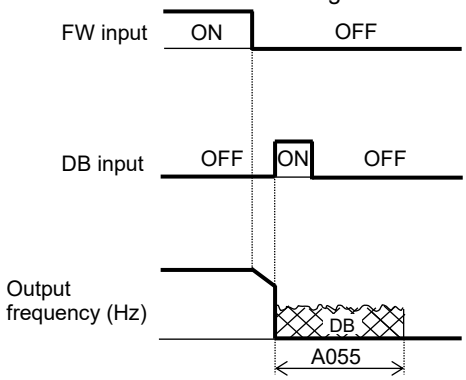	(Example 2-b) When the inverter is decelerating and "A053=0.0": 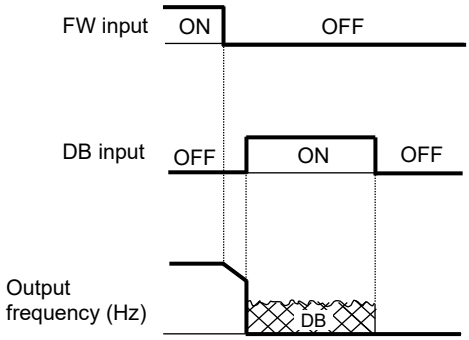
(Example 3-a) When the inverter is decelerating and "A053≠0.0": 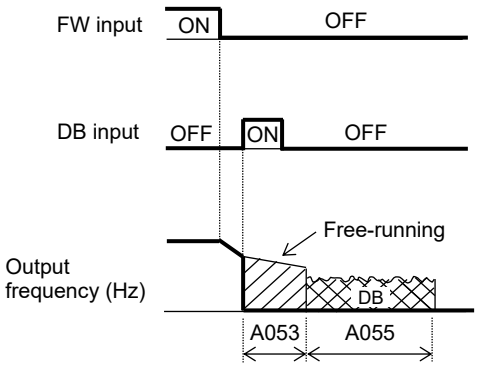	(Example 3-b) When the inverter is decelerating and "A053≠0.0": 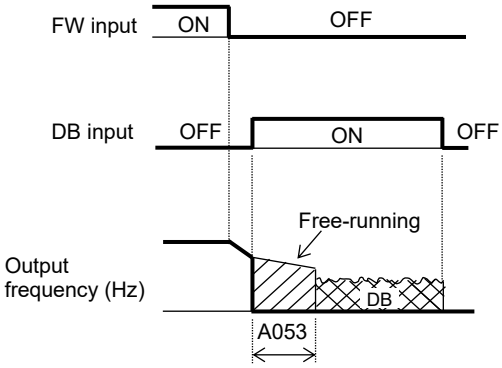

Note) The output frequency is 0 Hz when the inverter state is free-running or DB operating.

(3) Internal DC braking (A051=01)

You can apply DC braking to the motor even without entering braking signals via the "DB" terminal when the inverter starts and stops. To use the internal DC braking function, specify "01" for the DC braking enable (A051).
Use function "A057" to set the DC braking force for starting, and use function "A058" to specify the DC braking time for starting, regardless of the braking mode selection (edge or level mode). (See examples 4-a and 4-b.)
Set the braking force for periods other than starting by using the DC braking force for deceleration (A054).
Set the output frequency at which to start DC braking by using the DC braking frequency (A052).
When you set the DC braking wait time (A053), the inverter output will be shut off when the output frequency reaches the setting of "A052" after the operation command is turned off, and the motor will be free-running for the delay time set by "A053". DC braking will be started after the delay (A053).
The internal DC braking operation to be performed when the operation command is switched from the stop command to the start command varies depending on the braking mode (edge or level mode).

Edge mode: The DC braking time for deceleration (A055) is given priority over operation commands, and the inverter performs DC braking according to the setting of "A055". When the output frequency reaches the setting of "A052", the inverter performs DC braking for the time set for "A055". Even if the stop command is input during DC braking, DC braking continues until the time set for "A055" elapses. (See examples 5-a and 6-a.)

Level mode: Operation commands are given priority over the DC braking time setting. The inverter follows operation commands, regardless of the DC braking time for deceleration (A055). If the start command is input during DC braking, the inverter starts the normal motor operation, regardless of the DC braking time for deceleration (A055). (See examples 5-b and 6-b.)

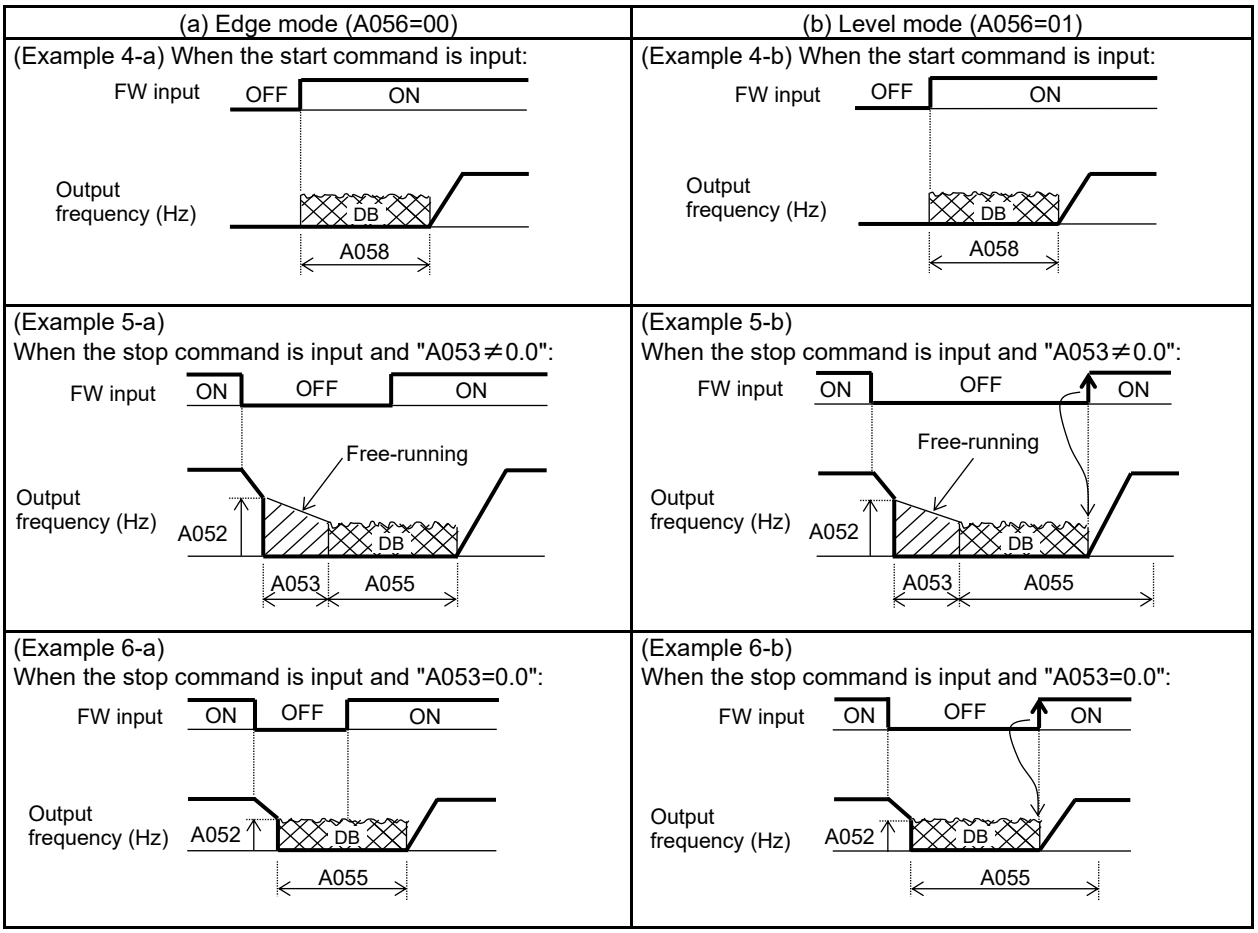

Note) The output frequency is 0 Hz when the inverter state is free-running or DB operating.

(4) Internal DC braking (A051=02)

You can also operate the internal DC braking function so that DC braking is applied to the motor when the inverter frequency command falls to the DC braking frequency (A052) or below.
Please do not use external DC braking by ON/OFF of "DB" terminal when you select this function.
In this mode, DC braking operates only when the operation command signal is on (i.e., "FW" input).
The inverter starts DC braking when both the frequency set by the frequency command and the current output frequency fall to the DC braking frequency (A052) or below. (See example 7-a.)
When the frequency set by the frequency command increases to the "setting of 'A052' + 2 Hz" or more, the inverter stops DC braking and restores its normal output. (See example 7-a.)
If the frequency set by the frequency command is 0 Hz when the start command is input via an analog input terminal, the inverter will start operation with DC braking because both the frequency set by the frequency command and current output frequency are 0 Hz. (See example 7-b.)
If the operation command signal (start command) is turned on when the frequency command specifies a frequency larger than the DC braking frequency (A052), the inverter will start operation with the normal output.

(Example 7-a)

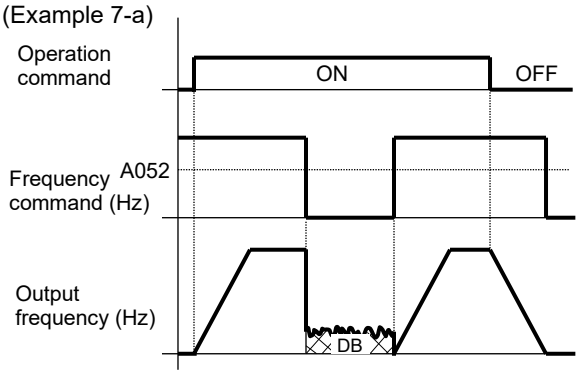

(Example 7-b)

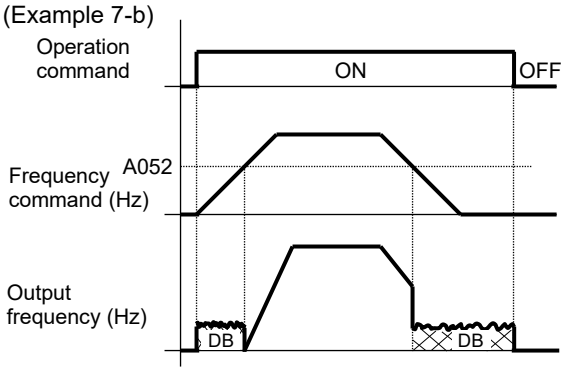

How the inverter returns to the normal output varies depending on the setting of the DC braking / edge or level detection for [DB] input (A056).

(a) Edge mode (A056=00)

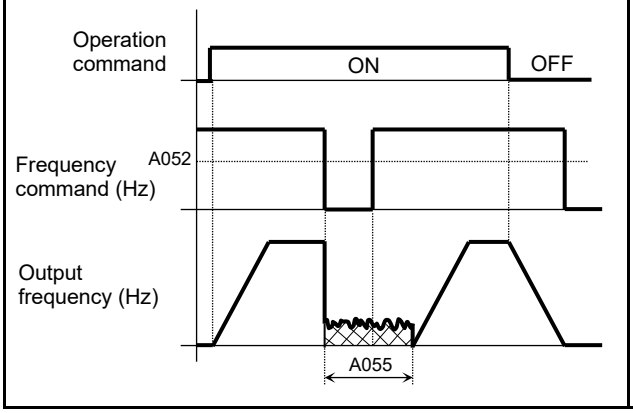

(b) Level mode (A056=01)

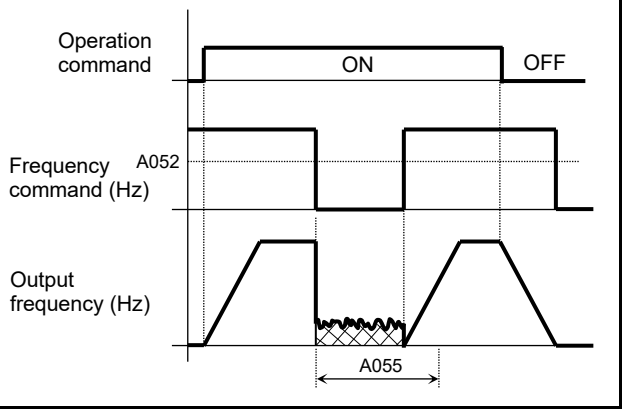

7.5.23 Motor capacity and poles setting (H003/H203,H004/H204)

When operating multiple motors with one inverter, select the motor capacity (H003/H203) close to sum of these motor capacities. If the poles of these motors are different, set the smallest motor poles to the motor poles setting (H004/H204).
When the automatic torque boost function is valid, if these settings are wrong, it may cause the torque reduction, or the motor operation is unstable.

Item	Function code	Data	Description
Motor capacity	H003/H203	0.10 to 5.50 (kW)	
Motor poles setting	H004/H204	2 / 4 / 6 / 8 (poles)	

7.6 Functions related to the operator display

7.6.1 STOP/RESET key enable (b087,A002/A202)

The STOP/RESET key enable function allows you to enable or disable the motor-stopping and trip reset functions by the STOP/RESET key of the standard panel or the digital operator.
This function is effective only when the operator (02) is not specified for the run command source (A002/A202).
If the operator (02) is specified for the run command source (A002/A202), the motor-stopping and trip reset functions by the STOP/RESET key are enabled regardless of this setting (STOP/RESET key enable).

Function code	Data	Stop command with STOP key	Trip reset command with RESET key
b087	00	Enabled	Enabled
	01	Disabled	Disabled
	02	Disabled	Enabled

7.6.2 Software lock (SFT) function (b031,b166,C001 to C005)

The software lock function allows you to specify whether to disable rewriting of the data set for functional items. Use this function to protect the data against accidental rewriting.
You can select the functional items to be locked and the method of locking as described below.
When using an intelligent input terminal for this function, assign function "15" (SFT) to one of the intelligent input [1] to [5] functions (C001 to C005).
It is the mode for allowing changes during operation when "b031" is set "10", high level access mode.

Function code	Data	"SFT" terminal	Description
b031	00	ON / OFF	All parameters except "b031" are locked when "SFT" terminal is ON.
	01	ON / OFF	All parameters except "b031","F001","A020","A220","A021" to "A027", and "A038" are locked when "SFT" terminal is ON.
	02	—	All parameters except "b031" are locked.
	03	—	All parameters except "b031","F001","A020","A220","A021" to "A027", and "A038" are locked.
	10	—	High level access including "b031" is available. See the "Run Mode Edit - B" column described in each tables of the section "13.1 Operator" for the accessible parameters in this high level access mode.

The following function can prohibit Read/Write by WOP.

function	code	Data	Description
Data Read/Write selection	b166	00	Read/Write OK
		01	Read/Write Protected

7.6.3 Forcible-operation from the operator (OPE) function (C001 to C005)

The forcible-operation from the operator (OPE) function allows you to forcibly enable the inverter operation from the operator when the operator is not selected as the device to input frequency and operation commands. An intelligent input terminal is used to turn this function ON and OFF.
When the intelligent input terminal to which the operator control function (OPE) is assigned is OFF, frequency and operation commands are input from the devices selected by functions "A001/A201" and "A002/A202". When the terminal is ON, the device to input frequency and operation commands is forcibly switched to the operator internally.
If the input device is switched while the inverter is operating, the current operation command is canceled, and the inverter stops the output. When restarting the inverter operation, turn off the operation command that was to be entered from each input device for safety's sake, and then enter a new operation command.
When use it together with "F-TM" function, "OPE" function is given priority.

Item	Function code	Data	Description
Intelligent input [1] to [5] function	C001 to C005	31	OPE: Operator control

7.6.4 Forcible-operation from terminal (F-TM) function (C001 to C005)

The forcible-operation from terminal (F-TM) function allows you to forcibly enable the inverter operation via control terminal when the control terminal is not selected as the device to input frequency and operation commands. An intelligent input terminal is used to turn this function ON and OFF.
When the intelligent input terminal to which the forcible-terminal operation function (F-TM) is assigned is OFF, frequency and operation commands are input from the devices selected by functions "A001/A201" and "A002/A202". When the terminal is ON, the device to input frequency and operation commands is forcibly switched to the control terminal internally.
If the input device is switched while the inverter is operating, the current operation command is canceled, and the inverter stops the output. When restarting the inverter operation, turn off the operation command that was to be entered from each input device for safety's sake, and then enter a new operation command.
When use it together with "OPE" function, "OPE" function is given priority.

Item	Function code	Data	Description
Intelligent input [1] to [5] function	C001 to C005	51	F-TM: Force terminal mode

7.6.5 Action selection in case of external operator disconnection (b165)

When the inverter detects a disconnection with the remote operator (operator communication is cut off for five seconds or more), inverter operation is subject to "b165".

Item	Function code	Data	Description
Operation at external operator connection loss	b165	00	Trip (E40.x)
		01	Trip after deceleration stop (E40.x)
		02	Ignore
		03	Free-run stop
		04	Deceleration stop

7.6.6 Initial display selection (selection of the initial display after power-on) (b038)

The initial display selection function allows you to specify the display that is displayed on the operator immediately after the inverter power is turned on. The table below lists the displays (items) selectable. (The factory setting is "001" (d001).)

Item	Function code	Data	Description
Initial display selection	b038	000	Function code that SET or STR key pressed last displayed. (*1)
		001 to 060	"d001" to "d060" displayed. (set value (***) is the monitor No. (d***))
		201	"F001" displayed. (output frequency setting)
		202	B display of WOP. (In case of digital operator, same "000" setting)

(*1): If the inverter power is turned off immediately after the setting of "b038" has been changed, the operator will display "b038" as the initial display after the next power-on.

7.6.7 Select automatic return to the initial display (b164,b038)

If you do not manipulate the operator for 10 minutes, the operator display automatically changes to the display that you set in the "b038".
To use this function, specify "01" for the automatic return to the initial display (b164).

Item	Function code	Data	Description
Automatic return to the initial display	b164	00	Disable
		01	Enable

7.6.8 NES1-OP display selection (b150)

All keys on the NES1-OP do not work when you connect a remote operator.
This function sets the monitor code to be displayed in NES1-OP.

Item	Function code	Data	Description
Display external operator connected	b150	001 to 060	"d001" to "d060" corresponding to the monitor item.

7.6.9 Data Read/Write selection (b166)

This function is to choose whether to allow read/write of data for the WOP. Refer to subsection "7.6.2 Software lock (SFT) function".

Item	Function code	Data	Description
Data Read/Write selection	b166	00	Enable
		01	Disable

7.6.10 Display limitation function (DISP) (C001 to C005,b038)

To use this function, assign function "86" (DISP) to one of the intelligent input [1] to [5] functions (C001 to C005).
While the "DISP" terminal is turned ON, the operator displays a parameter chosen by initial display selection (b038). And cannot select other parameter.

Item	Function code	Data	Description
Intelligent input [1] to [5] function	C001 to C005	86	DISP: Display limitation

7.6.11 Function code display restriction (b037)

The function code display restriction function allows you to arbitrarily switch the display mode or the display content on the operator.

Item	Function code	Data	Description
Function code display restriction	b037	00	Full display
		01	Function-specific display
		03	Data comparison display
		04	Basic display
		05	Monitor display (d***) only

(1) Function-specific display mode (b037=01)

If a specific function has not been selected, the operator does not display the parameters concerning the specific function.
The following table lists the details of display conditions:

No.	Display condition	Parameter displayed when the display condition is met
1	One of C001 to C005 = 08	F202, F203, A201 to A204, A220, A244, A245, A261, A262, A281, A282, A292 to A296, b212, b213, b221 to b223, C241, H203, H204 and H206
2	(A044 = 02) or/ (One of C001 to C005 = 08 and A244 = 02)	b100 to b113
3	(b013 = 02) or/ (One of C001 to C005 = 08 and b213 = 02)	b015 to b020
4	A044 = 00 or 01	A041 to A043, A046, A047
5	(One of C001 to C008 = 08) and (A244 = 00 or 01)	A241 to A243, A246, A247
6	(A051 = 01 or 02) or/ (One of C001 to C005 = 07)	A052 to A059
7	One of C001 to C005 = 06	A054, A055, A059
8	A071 = 01 or 02	d004, A072 to A078, A156 to A158, C044, C052, C053
9	(A097 = 01 to 03) or/ (A098 = 01 to 03)	A131, A132
10	b050 = 01 to 03	b051 to b054, b133, b134
11	b130 = 01 to 03	b131 to b134
12	C070 = 01	C071 to C078

(2) Data comparison display mode (b037=03)

The operator displays only the parameters that have been changed from the factory settings, except all monitoring indications (d***), code "F001" and code "b037".

(3) Basic display mode (b037=04)

The operator displays basic parameters.
The following table lists the parameters that can be displayed in basic display mode:

No.	Code displayed	Item
1	d001 to d104	Monitoring indication
2	F001	Output frequency setting
3	F002	Acceleration time (1)
4	F003	Deceleration time (1)
5	F004	RUN key routing
6	A001	Frequency source
7	A002	Run command source
8	A003	Base frequency
9	A004	Maximum frequency
10	A020	Multi-speed frequency 0
11	A021	Multi-speed frequency 1
12	A022	Multi-speed frequency 2
13	A023	Multi-speed frequency 3
14	A044	V/f characteristic curve
15	A045	V/f gain
16	A085	Energy-saving operation mode
17	b001	Restart mode on undervoltage trip
18	b002	Allowable undervoltage time
19	b008	Restart mode on overvoltage / overcurrent trip
20	b011	Retry wait time on overvoltage / overcurrent trip
21	b031	Software lock mode selection
22	b037	Function code display restriction
23	b083	Carrier frequency
24	b084	Initialization mode (parameters or trip history)
25	b130	Deceleration overvoltage suppression enable
26	b131	Deceleration overvoltage suppression level
27	b180	Initialization trigger
28	C001	Intelligent Input [1] function
29	C002	Intelligent Input [2] function
30	C003	Intelligent Input [3] function
31	C004	Intelligent Input [4] function
32	C005	Intelligent Input [5] function
33	C021	Intelligent output [11] function
34	C036	Intelligent relay active state

(4) Monitor display (d***) only (b037=05)

The operator displays only the parameters of all monitoring indications (d***) and "b037".

7.6.12 Button sensitivity selection (C151)

This function sets RUN/STOP/RESET key sensitivity of the standard panel. If set to "no", the key is disabled.

Item	Function code	Data	Description
Button sensitivity selection	C151	0 to 250	Data times 2 ms
		no	Disabled the RUN/STOP/RESET key

7.6.13 Scroll sensitivity selection (C152)

On the display data of the operator, press and hold the UP or DOWN key.
Then, the data update rate is faster. Update rate can be adjusted by Scroll sensitivity selection (C152).
This function only works when an operator except WOP is connected.

Item	Function code	Data	Description
Scroll sensitivity selection	C152	1 to 20	1: (Faster) ←——→ 20: (Slower)

7.7 Functions about restarting

7.7.1 Retry (UnderVoltage, OverCurrent, OverVoltage) (b001 to b005,b007,b008,b010,b011,b028 to b030)

(1) Retry (restart) after undervoltage

You can select tripping or retrying (restarting) the motor operation as the inverter operation to be performed at the occurrence of undervoltage.
If you specify a retry operation for the restart mode on undervoltage trip (b001), the inverter will retry the motor operation for the number of times set as "b005" after an undervoltage, and then trip if all retries fail. (The inverter will not trip if you specify an unlimited number of retries (b005=01).)
With function "b004" you can select whether to make the inverter trip when an undervoltage occur while the inverter is in a stopped state.
When selecting a retry operation, also set the retry conditions listed below according to the system to be driven by the inverter.
Even during a retry operation, the inverter will trip with error code "E09" (undervoltage) displayed if the undervoltage status continues for 40 seconds.

Item	Function code	Data or range of data	Description
Restart mode on undervoltage trip (*3)(*4)	b001	00	Tripping
		01	Restarting the motor with 0 Hz
		02	Restarting the motor with active frequency matching. (See example 1.) (*2)(*5)
		03	Restarting the motor with active frequency matching. The inverter trips after decelerating and stopping the motor. (*1)(*2)(*5)
Allowable undervoltage time	b002	0.3 to 25.0 (s)	Restarting the motor when the power failure duration does not exceed the specified time. (See example 1.) Tripping when the power failure duration exceeds the specified time. (See example 2.)
Retry wait time before motor restart	b003	0.3 to 100.0 (s)	Time to wait until restarting the motor.
Instantaneous undervoltage trip alarm enable (*3)	b004	00	Disabling the inverter from tripping.
		01	Enabling the inverter to trip.
		02	Disabling the inverter from tripping when the inverter is stopped or while the motor is being decelerated or stopped after the operation command has been turned off.
Number of restarts on undervoltage trip	b005	00	Retrying the motor operation up to 16 times after instantaneous power failure.
		01	Retrying the motor operation an unlimited number of times after instantaneous power failure.
Restart frequency threshold	b007	0.00 to 400.0 (Hz)	Restarting the motor with 0 Hz if the motor frequency becomes less than the frequency set here during motor free-running. (See examples 3 and 4.)
Current level of active frequency matching	b028	(0.20 to 2.00)× inverter rated current (A)	Current limit for restarting with active frequency matching.
Deceleration rate of active frequency matching	b029	0.1 to 3000. (s)	Duration of frequency lowering when restarting with active frequency matching.
Start frequency of active frequency matching	b030	00	Frequency set when the inverter output has been shut off.
		01	Maximum frequency
		02	Newly frequency command
Intelligent output [11] function	C021	05	AL: Alarm Signal
Intelligent relay function	C026	09	UV: Undervoltage

About (*1) to (*5), see the next page.

(*1) If the inverter trips because of overvoltage or overcurrent while decelerating the motor, the inverter will display error code "E09" (undervoltage), and the motor will start free-running. If this error occurs, prolong the deceleration time.
(*2) The inverter may start the motor with 0 Hz if:
1) The output frequency is not more than half of the base frequency.
2) The voltage induced on the motor is attenuated quickly.
(*3) Even when a retry operation ("01" to "03") is specified for the restart mode on undervoltage trip (b001) and a disabling undervoltage trip ("00" or "02") is specified for the instantaneous undervoltage trip alarm enable (b004), the inverter will trip if the undervoltage failure continues over the allowable undervoltage time (b002). (See example 2.)
When retry mode is trip (b001=00) and the instantaneous undervoltage time is within allowable undervoltage time (b002) setting, the undervoltage trip will occur.
(*4) Even when a retry operation is specified for "b001", the inverter will trip if the undervoltage status continues for 40 seconds or more.
(*5) When starting the motor with active frequency matching is selected, the inverter may restart suddenly by alarm resetting, resetting and retry-start.

The figures below show the timing charts for starting with active frequency matching (when "02" is specified for the restart mode on undervoltage trip (b001)).

t0: Duration of instantaneous power failure
t1: Allowable undervoltage time (b002)
t2: Retry wait time before motor restart (b003)

(Example 1) When "t0" is equal or less than "t1".

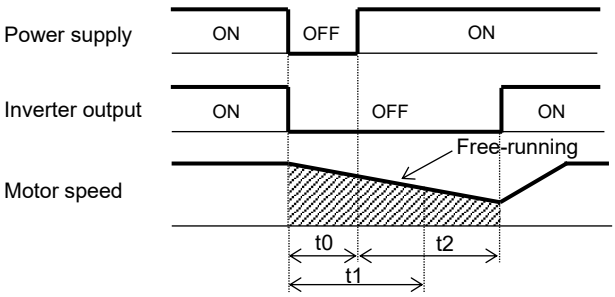

(Example 2) When "t0" is more than "t1".

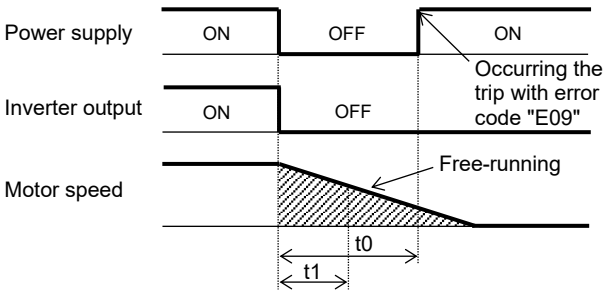

(Example 3) When the motor frequency (speed) is equal or more than the setting of "b007".
(In case of "b030=00"):

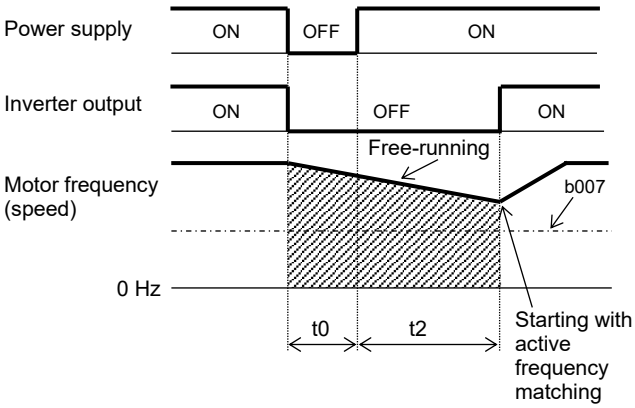

(Example 4) When the motor frequency (speed) is less than the setting of "b007".
(In case of "b030=00") :

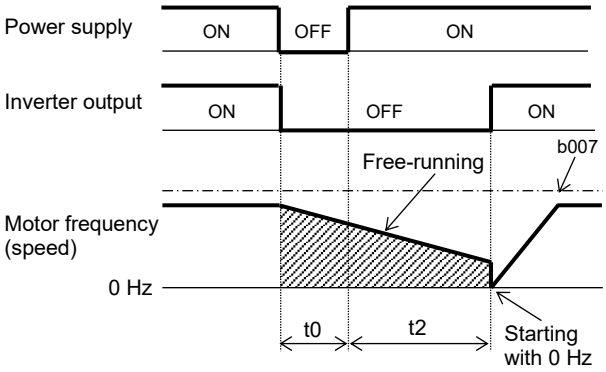

(2) Retry (restart) after overcurrent, overvoltage

You can select tripping or retrying (restarting) the motor operation as the inverter operation to be performed at the occurrence of overcurrent or overvoltage.
If you specify a retry operation for the restart mode on overvoltage / overcurrent trip (b008), the inverter will retry the motor operation for the number of times set as "b010" after an overcurrent or overvoltage, and then trip if all retries fail.
When selecting a retry operation, also set the retry conditions listed below according to the system to be driven by the inverter.

Item	Function code	Data or range of data	Description
Restart frequency threshold	b007	0.00 to 400.0 (Hz)	Restarting the motor with 0 Hz if the motor frequency becomes less than the frequency set here during motor free-running. (See above examples 3 and 4.)
Restart mode on overvoltage / overcurrent trip	b008	00	Tripping
		01	Restarting the motor with 0 Hz
		02	Restarting the motor with active frequency matching. (*2)
		03	Restarting the motor with active frequency matching. The inverter trips after decelerating and stopping the motor. (*2)
Number of retry on overvoltage / overcurrent trip	b010	1 to 3 (times)	Number of retries to be made after the occurrence of overvoltage or overcurrent. (*1)
Retry wait time on overvoltage / overcurrent trip	b011	0.3 to 100.0 (s)	Time to wait until restarting the motor.
Current level of active frequency matching	b028	(0.20 to 2.00) × inverter rated current (A)	Current limit for restarting with active frequency matching.
Deceleration rate of active frequency matching	b029	0.1 to 3000. (s)	Duration of frequency lowering when restarting with active frequency matching.
Start frequency of active frequency matching	b030	00	Frequency set when the inverter output has been shut off.
		01	Maximum frequency
		02	Newly frequency command
Intelligent output [11] function Intelligent relay function	C021 C026	05	AL: Alarm Signal

(*1) Even when a retry operation is specified for "b008", the inverter will trip if the cause of trip is not removed by the end of the retry wait time on overvoltage / overcurrent trip (b011). If this occurs, prolong the retry wait time.
(*2) When starting the motor with active frequency matching is selected, inverter may restart suddenly by alarm resetting, resetting and retry-start.

(3) Output of the alarms for undervoltage in the stopped state

Use function "b004" to specify whether to output an alarm when undervoltage is occurred in the stopped state. The inverter outputs the alarm providing the control power remains in the inverter.

Output of the alarms for undervoltage in the stopped state:
Examples 5 to 7 show the alarm output operations with standard settings.

(Example 5) In case of "b004=00":

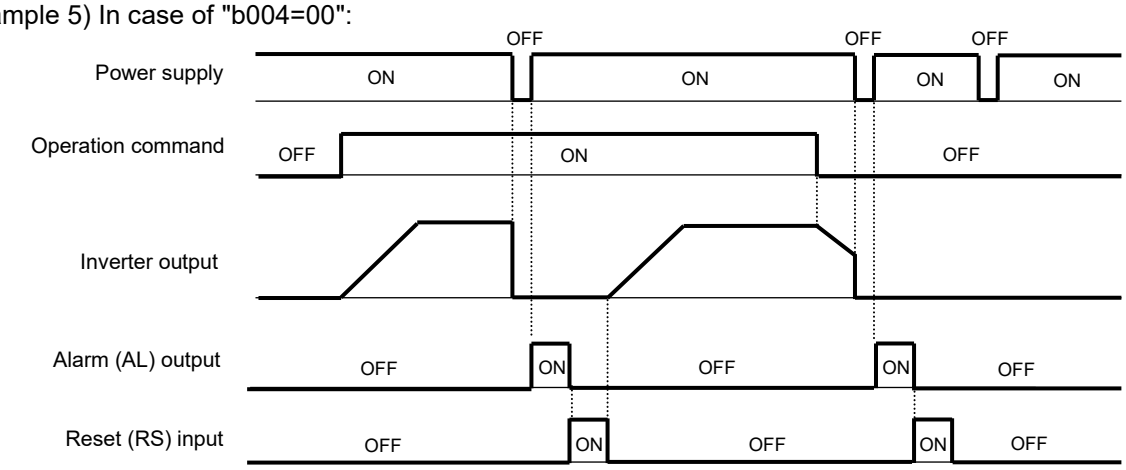

(Example 6) In case of "b004=01":

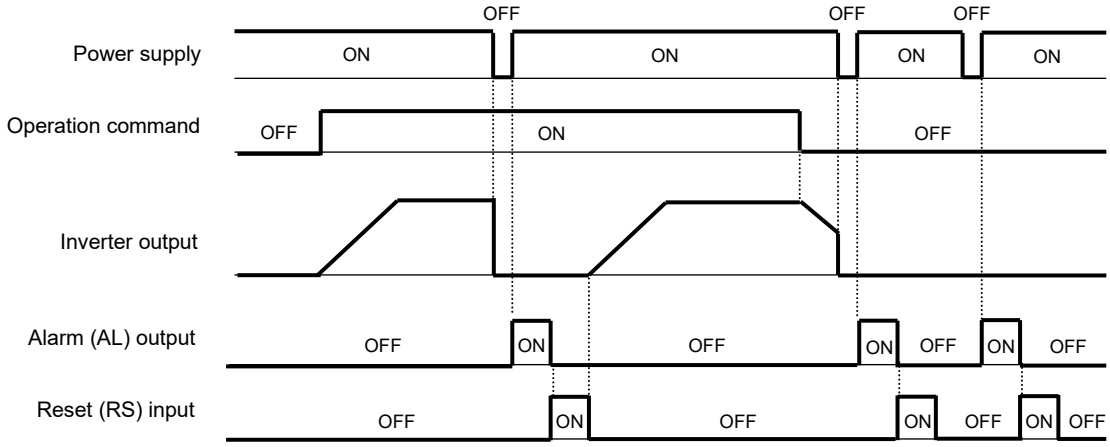

(Example 7) In case of "b004=02":

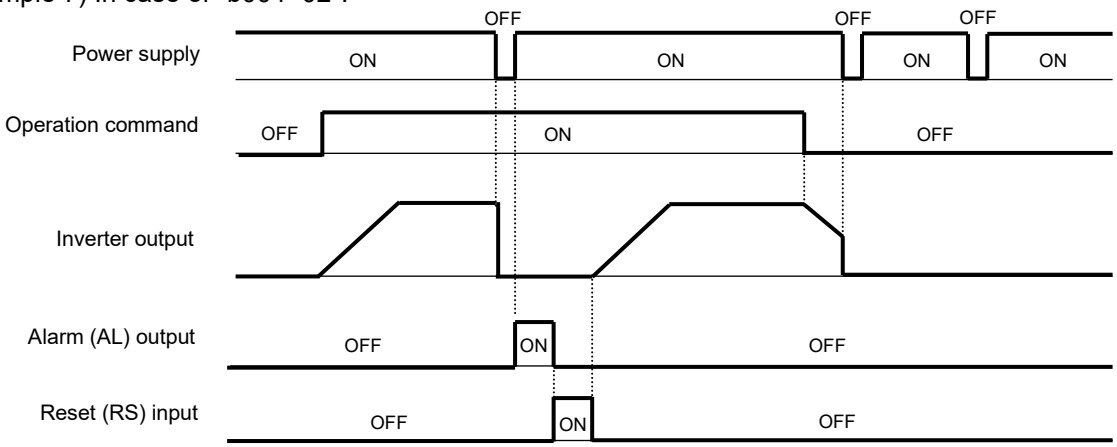

(4) Restarting methods

- Restart with active frequency matching
  The inverter starts the output with the frequency specified for the start frequency of active frequency matching (b030), but if there is a difference between the motor rotation frequency and the specified frequency, the output current increases. If the output current exceeds the current level of active frequency matching (b028), the output frequency is reduced in accordance with the deceleration rate of active frequency matching (b029) to reduce the output current, and restart the output frequency to follow the motor rotation frequency.

If the inverter trips when it restarts the motor in this way, reduce the setting of "b028".
After the inverter output has been shut off, the digital operator continues to display [0000] until the inverter restarts the motor operation.

(Example) In case of after free-run stop:

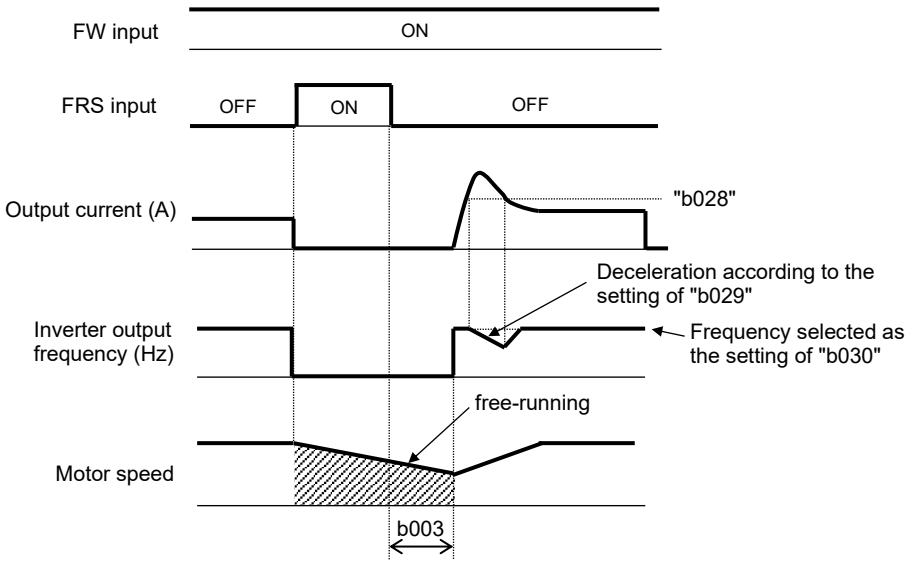

7.7.2 Reset (RS) function (b003,b007,C102,C103,C001 to C005)

The reset function allows you to recover the inverter from a tripped state.
To perform resetting, press the STOP/RESET key of the standard panel or the operator, or turn the "RS" terminal ON.
To use the control terminal for resetting, assign function "18" (RS) to one of the intelligent input [1] to [5] functions (C001 to C005).
You can select the restart mode to apply after resetting with the restart mode after reset (C103). When "C102=02", starting with 0 Hz is selected regardless to "C103" setting.
If the inverter trips because of overcurrent when it starts the motor with active frequency matching, increase the retry wait time before motor restart (b003).
You can select the alarm reset timing with the reset selection (C102). You can also enable the reset signal to be output only when resetting an error alarm.
The "RS" terminal can be configured only as a-contact (NO).
Do not use the "RS" terminal for the purpose of shutting off the inverter output. The reset operation clears the electronic thermal data in the inverter. Therefore, the inverter may be damaged during operation.

Item	Function code	Data or range of data	Description
Retry wait time before motor restart	b003	0.3 to 100.0 (s)	Time to wait after reset until restarting the motor.
Restart frequency threshold	b007	0.00 to 400.0 (Hz)	Restarting the motor with 0 Hz if the motor frequency becomes less than the frequency set here during motor free-running.
Reset selection	C102	00	Resetting the trip when the "RS" signal is turned on. (See example 1.) (When operation is normal) Shutting off the inverter output. (See example 3.) (When an error has occurred) Resetting the trip.
		01	Resetting the trip when the "RS" signal is turned off. (See example 2.) (When operation is normal) Shutting off the inverter output. (See example 3.) (When an error has occurred) Resetting the trip.
		02	Resetting the trip when the "RS" signal is turned on. (See example 1.) (When operation is normal) Disabling the "RS" input. (See example 4.) (When an error has occurred) Resetting the trip.
Restart mode after reset	C103	00	Start with 0 Hz.
		01	Start with active frequency matching. (See example 5.)

(Example 1) In case of "C102=00 or 02"

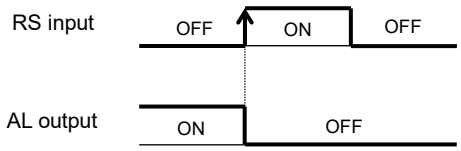

(Example 2) In case of "C102=01"

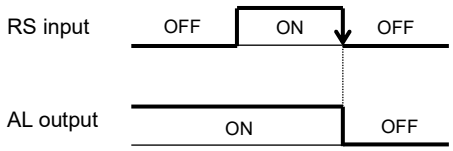

(Example 3) In case of "C102=00 or 01"

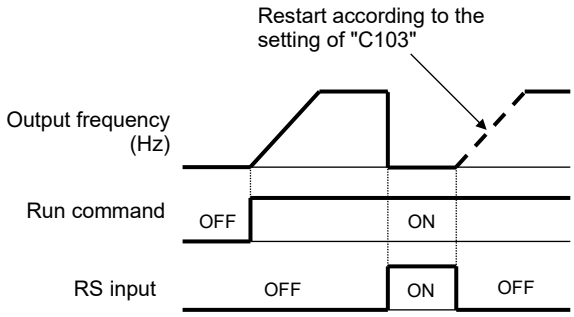

(Example 4) In case of "C102=02"

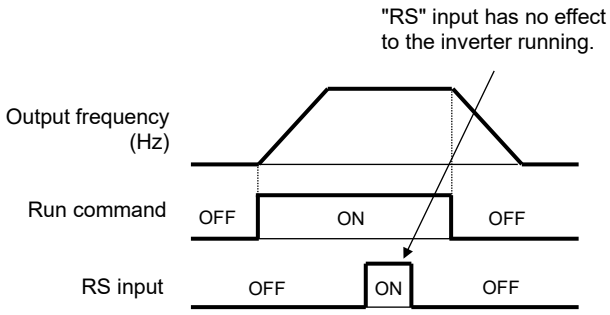

(Example 5) Restarting with active frequency matching

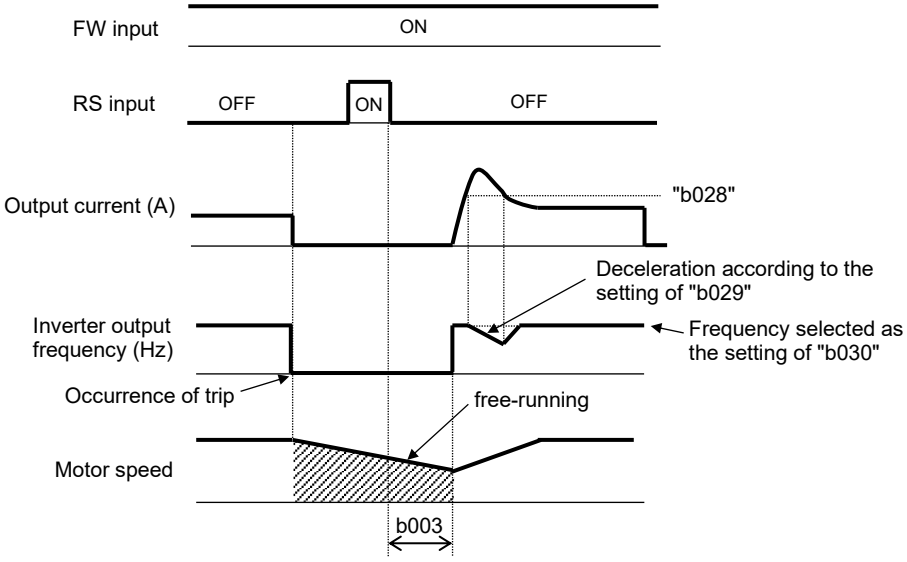

After the retry wait time before motor restart (b003), the inverter restarts the motor with the frequency set as "b030". If the output current exceeds the current level of active frequency matching (b028), the output frequency is reduced in accordance with the deceleration rate of active frequency matching (b029) to reduce the output current, and restart the output frequency to follow the motor rotation frequency.

When the output frequency matches the motor speed, the inverter re-accelerates the motor up to the frequency that was set when the inverter shut off the output to the motor before the restart.
If the inverter trips because of overcurrent when it restarts the motor with input frequency, reduce the setting of "b028".

(note) Inverter starts from 0 Hz when reset signal is given during retry waiting because the frequency stored in inverter is cleared.

7.7.3 Free-run stop (FRS) function (b003,b007,b028 to b030,b088,C001 to C005)

The free-run stop (FRS) function allows you to shut off the inverter output and to let the motor start free-running.
You can effectively use this function when stopping the motor with a mechanical brake (e.g., electromagnetic brake). If an attempt is made to forcibly stop the motor with a mechanical brake while the inverter keeps its output, the inverter may trip because of overcurrent.
To use this function, assign function "11" (FRS) to one of the intelligent input [1] to [5] functions (C001 to C005).
The free-run stop (FRS) function operates as long as the "FRS" terminal is ON. When the "FRS" terminal is turned OFF, the inverter restarts the motor after the retry wait time before motor restart (b003).
However, the inverter does not restart the motor if the operator has been specified for the run command source (A002/A202=02). To restart the motor in such status, enter a new operation command.
You can select the inverter restarting mode with the restart mode after FRS (b088). (See examples 1,2.)
Even when restarting with active frequency matching has been selected, the inverter restarts the motor with 0 Hz if it detects a frequency lower than the restart frequency threshold (b007).
The settings, including that of the "FRS" terminal, which you make for this function will affect the inverter operation at recovery from the free-run status.

Item	Function code	Data or range of data	Description
Restart mode after FRS	b088	00	Restart with 0 Hz (See example 1.)
		01	Restart with active frequency matching (See example 2.)
Retry wait time before motor restart	b003	0.3 to 100.0 (s)	Time to wait until restarting the motor.
Restart frequency threshold	b007	0.00 to 400.0 (Hz)	Restart from 0 Hz if the motor frequency at restart is less than this setting.
Current level of active frequency matching	b028	(0.20 to 2.00)×inverter rated current (A)	Current limit for restarting with active frequency matching.
Deceleration rate of active frequency matching	b029	0.1 to 3000. (s)	Duration of frequency lowering when restarting with active frequency matching.
Start frequency of active frequency matching	b030	00	Frequency set when the inverter output has been shut off.
		01	Maximum frequency
		02	Newly frequency command
Intelligent input [1] to [5] function	C001 to C005	11	FRS: Free-run Stop

(Example 1) Restarting with 0 Hz

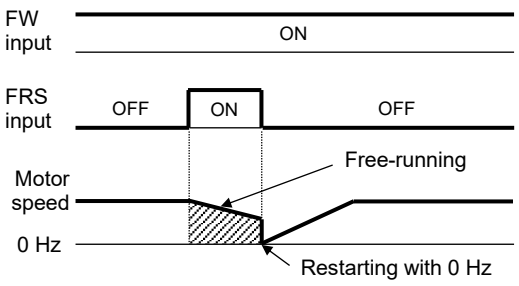

The inverter restarts the motor with 0 Hz regardless of the motor speed. The setting of retry wait time is ignored.
If the inverter restarts the motor with 0 Hz when the motor speed is high, the inverter may trip because of overcurrent.

(Example 2) Restarting with active frequency matching

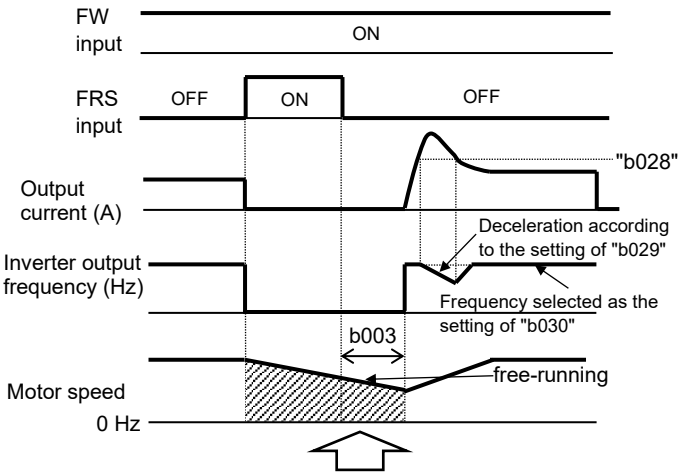

After the "b003", the inverter restarts the motor with the frequency set as "b030". If the output current exceeds the "b028", the output frequency is reduced in accordance with "b029" to reduce the output current, and restart the output frequency to follow the motor rotation frequency.
When the output frequency matches the motor speed, the inverter re-accelerates the motor up to the frequency that was set when the inverter shut off the output to the motor before the restart.
If the inverter trips because of overcurrent when it restarts the motor with input frequency, reduce the setting of "b028".

7.7.4 Unattended start protection (USP) function (C001 to C005)

The unattended start protection function allows you to make the inverter trip with error code "E13" displayed if the inverter power is turned on when an operation command has been turned on.
You can recover the inverter from tripping by performing the reset operation or turning the operation command off. (See example 1.)
If the reset operation is performed when the operation command left turned on, the inverter will start operation immediately after recovery. (See example 2.)
The inverter can operate normally when an operation command is turned on after the inverter power is turned on. (See example 3.)
To use this function, assign function "13" (USP) to one of the intelligent input [1] to [5] functions (C001 to C005).
This function is invalid with the standard panel (RUN/STOP/RESET key).
When a run command is input from the operator or Modbus within two seconds after the power supply injection, the inverter trips with error code "E13".

The following charts show examples of the timing of the unattended start protection operation:

(Example 1) Power on during "FW" on: (Recovery by "FW" off)

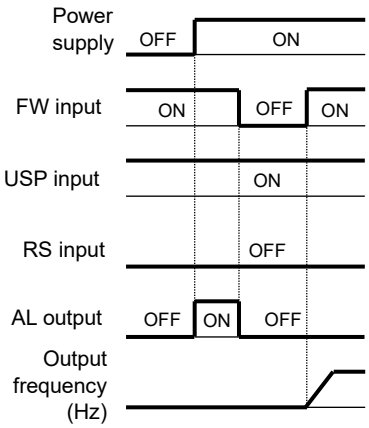

(Example 2) Power on during "FW" on: (Recovery by "RS" on)

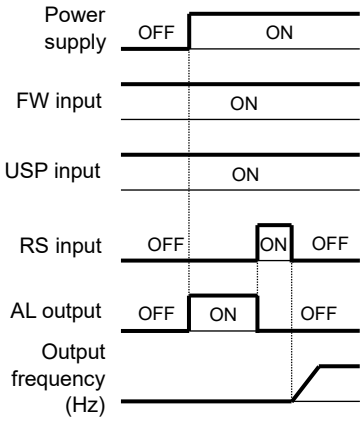

(Example 3) "FW" on after Power on: (Normal operation)

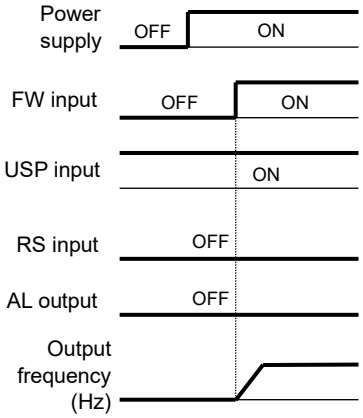

Item	Function code	Data	Description
Intelligent input [1] to [5] function	C001 to C005	13	USP: Unattended Start Protection

7.7.5 Deceleration and stopping at power failure (nonstop deceleration at instantaneous power failure) (b050 to b054,b133,b134)

The nonstop deceleration at instantaneous power failure is the function making the inverter decelerate and stop the motor while maintaining the voltage below the overvoltage level when an instantaneous power failure occurs during the inverter operation.
You can select three modes with controlled deceleration on power loss selection (b050).

Item	Function code	Data or range of data	Description
Controlled deceleration on power loss selection	b050	00	Disabling the nonstop deceleration function.
		01	Enabling the nonstop deceleration function. (DEC & STOP)
		02	Enabling the nonstop deceleration function. (*5) (DC bus voltage constant control, no restoration.)
		03	Enabling the nonstop deceleration function. (*5) (DC bus voltage constant control, Restoration to be done.)
DC bus voltage trigger level of controlled deceleration (*4)	b051	0.0 to 400.0 (VDC)	Selectable on 200 V class inverter models.
		0.0 to 800.0 (VDC)	Selectable on 400 V class inverter models.
Overvoltage threshold of controlled deceleration (*1)(*4)	b052	0.0 to 400.0 (VDC)	Selectable on 200 V class inverter models.
		0.0 to 800.0 (VDC)	Selectable on 400 V class inverter models.
Deceleration time of controlled deceleration (*3)	b053	0.01 to 300.0 (s)	
Initial frequency drop of controlled deceleration (*4)	b054	0.00 to 10.00 (Hz)	
Deceleration overvoltage suppression proportional gain	b133	0.00 to 5.00	Proportional gain setting for DC bus voltage constant control (valid when "b050=02 or 03")
Deceleration overvoltage suppression integral time	b134	0.0 to 150.0 (s)	Integral time setting for DC bus voltage constant control (valid when "b050=02 or 03")

(*1) In case of "b052" is less than the supply voltage (equivalent to rectified DC voltage which is square root 2 times supply AC voltage), when power recovers while this function is activated, inverter will be in the LAD stop status and cannot decelerate. (Stop command and frequency change command are not accepted until deceleration is completed). Be sure to set "b052" more than the standard supply voltage.
(*2) This nonstop deceleration function cannot be canceled until the nonstop deceleration operation is completed. To restart the inverter operation after power recovery, wait until the inverter stops, enter a stop command, and then enter an operation command.
(*3) Setting higher initial frequency drop of controlled deceleration (b054) may result in overcurrent trip due to sudden deceleration.
Setting lower "b054", or longer deceleration time of controlled deceleration (b053) may result in undervoltage trip due to less regeneration power.
(*4) Each of the values of "b051" and "b052" must be undervoltage level (175 V (200 V class), 350 V (400 V class)) or more. This function does not operate when undervoltage occurs. The value of "b051" must be less than that of "b052".
(*5) When "02" or "03" is specified for "b050", PI control is performed so that the DC bus voltage is maintained at a constant level. PI-gain (P-gain, I-gain) can adjust by "b133" and "b134".

<1> nonstop deceleration at instantaneous power failure (b050=01)

The nonstop deceleration at instantaneous power failure is the function making the inverter decelerate and stop the motor while maintaining the voltage below "b052" when an instantaneous power failure occurs during the inverter operation.
If an instantaneous power failure has occurred while the inverter is operating the motor and the output voltage falls to "b051" or less, at first the inverter reduces the output frequency by "b054", and then decelerates the motor by "b053".
If the voltage increases to an overvoltage level (exceeding the overvoltage threshold of controlled deceleration (b052)) because of regeneration, the inverter enters the LAD stop state until the voltage falls below "b052".

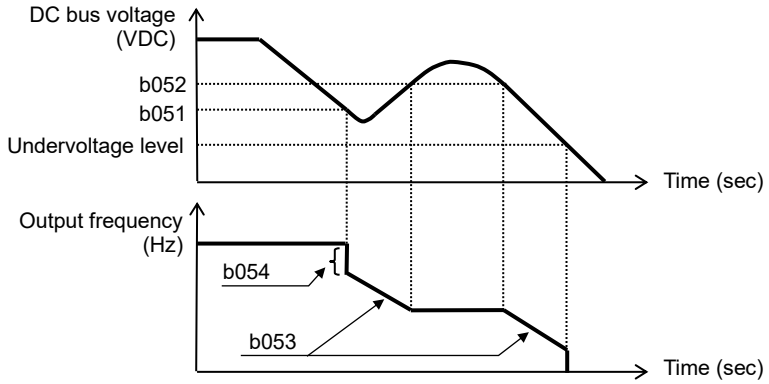

<2> DC voltage constant control during nonstop operation at instantaneous power failure

If instantaneous power failure occurs or the DC bus voltage drops during inverter operation, the inverter decelerates the motor while maintaining the DC bus voltage at the level specified as the overvoltage threshold of controlled deceleration (b052).
This function starts operating when all the following conditions are met:

- "02" or "03" has been specified for "b050".
- The inverter is running. (This function does not operate if the inverter is in trip status or stop status or undervoltage status.)
- The input power fails momentarily, or the DC bus voltage drops to "b051" or less.

If instantaneous power failure only lasts a short time, the inverter can continue operation without stopping its output. Conversely, if instantaneous power failure causes undervoltage, the inverter stops its output immediately and ends the operation of this function. When power is subsequently restored, the inverter operates according to the restart mode on undervoltage trip (b001).
When "03" is specified for "b050", the inverter can be restored to normal operation if the input power is recovered from instantaneous power failure before the inverter stops its output. The inverter, however, may decelerate and stop the motor if the DC bus voltage is below "b052" when the input power is recovered. The table below lists the differences in operation according to the setting of "b052".
When this function operates and the inverter decelerates and stops the motor, the motor is forcibly stopped even if the run command is ON. To restart the motor, turn on the run command again after confirming the recovery of inverter input power.

b050	b052	Operation
02 (No restoration)	"b052" ≥ DC bus voltage at input power recovery	Decelerating and stopping the motor. (DC bus voltage constant control) (Example 1)
	"b052" < DC bus voltage at input power recovery	Decelerating and stopping the motor. (Example 2)
03 (Restoration to be done)	"b052" ≥ DC bus voltage at input power recovery	Decelerating and stopping the motor. (DC bus voltage constant control) (Example 1)
	"b052" < DC bus voltage at input power recovery	Restarting the motor. (Example 2)

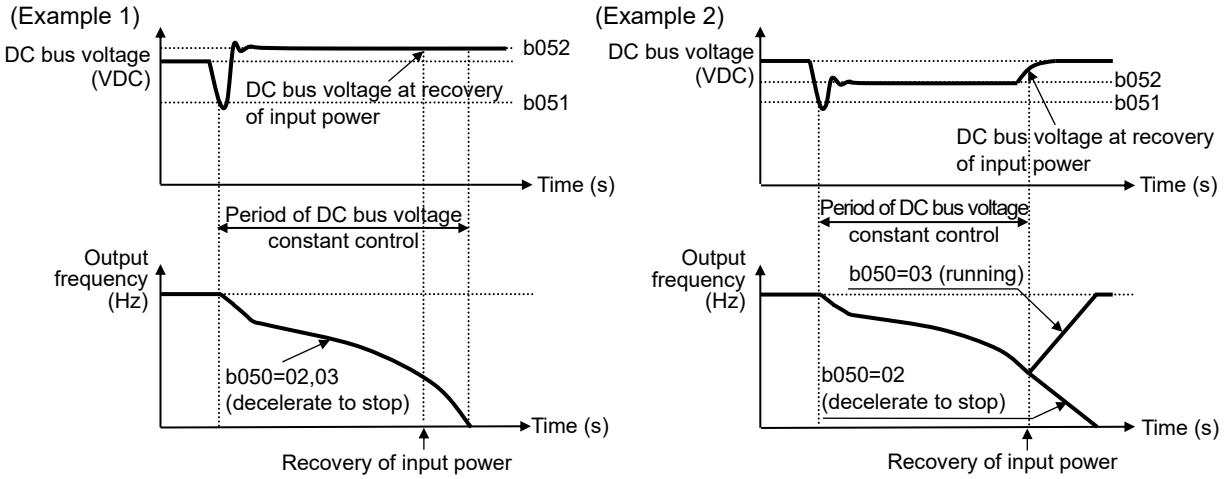

Note) Depending on the proportional gain (b133) and the integral time (b134), the DC bus voltage may be lower than "b052" during the DC bus voltage constant control.

7.8 Set functions related to protection and warning, each output signal

7.8.1 Alarm signal (AL)

When the inverter detects an anomaly, the inverter output is shut off, the inverter outputs an alarm signal "AL". This is called a trip. If you perform reset operation, the inverter deactivates the trip state. Alarm signal is turned OFF at the same time.

How to perform reset operation.

1) Pressing the STOP/RESET key.
2) To use the reset input terminal (18: RS).

(Part of the cause of trip can not be released by reset operation. In this case, it is required a power cycle.)

Alarm signal (05: AL) can be assigned to the intelligent output [11] function (C021) or intelligent relay function (C026). (The factory setting: "C026=05 (AL)")
Relay contacts are 1c. (Refer to subsection "7.3.5 Intelligent output terminal a/b (NO/NC) selection")

Item	Function code	Data	Description
Intelligent output [11] function Intelligent relay function	C021 C026	05	AL : Alarm Signal
Intelligent input [1] to [5] function	C001 to C005	18	RS: Reset Inverter

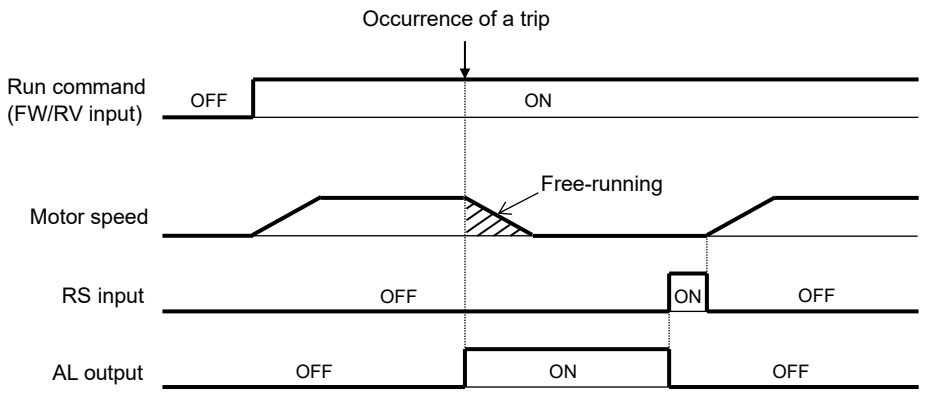

Run/Stop/Trip state transition using the RUN/STOP/RESET key of the standard panel is shown in the following.

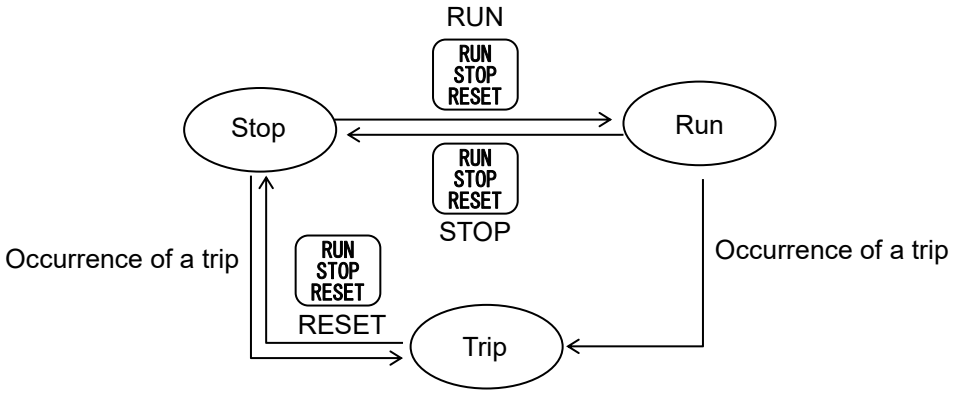

7.8.2 Electronic thermal protection (b012/b212,b013/b213,b015 to b020,C061)

The electronic thermal protection function allows you to protect the motor against overheating. Make settings of this function based on the rated current of the motor. The inverter will trip for overheat protection according to the settings.
This function provides optimum overheat protection that is also designed with the lowering of the motor's cooling performance at low speeds in mind.
You can configure this function so that the inverter outputs a warning signal before it trips for electronic thermal protection.

(1) Electronic thermal level

Item	Function code	Range of data	Description
Level of electronic thermal (calculated within the inverter from output current)	b012/b212	(0.20 to 1.00) × inverter rated current (A)	See the example below.

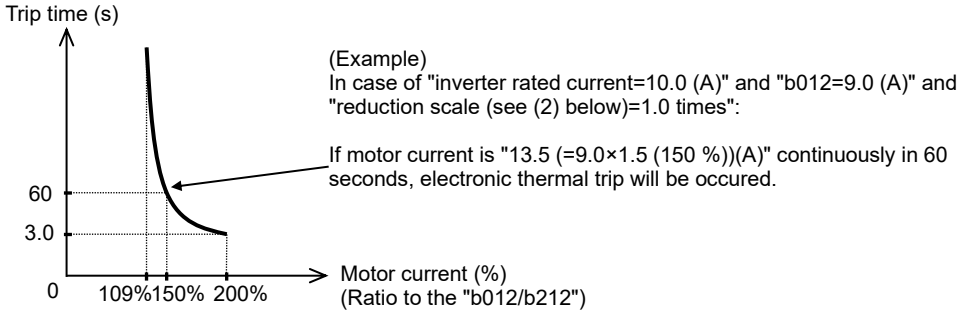

(2) Electronic thermal characteristic

The frequency characteristic set as the electronic thermal characteristic is integrated with the value of "b012" or "b212".
The cooling fan performance of a standard motor lowers when the motor speed is low. So, it is necessary to decrease load (current) at the low speed.
The reduced torque characteristic is designed to match the heat generation by Hitachi's standard motors.

Item	Function code	Data	Description
Electronic thermal characteristic	b013/b213	00	Reduced torque characteristic
		01	Constant torque characteristic
		02	Free setting of electronic thermal characteristic

(a) Reduced torque characteristic
The time-limit characteristic determined by the below graph is integrated with each frequency multiplied by reduction scales.

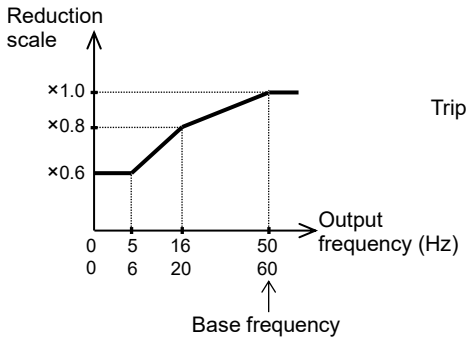

Reduction scale

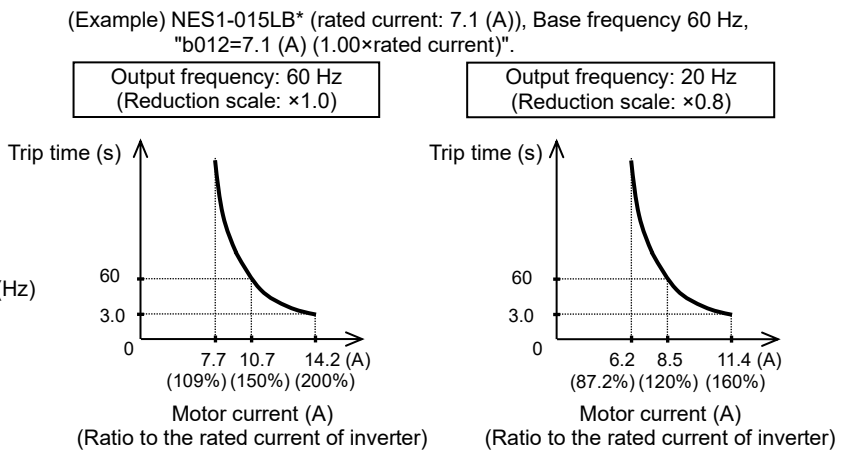

(b) Constant torque characteristic
Make this setting when driving a constant torque motor with the inverter.

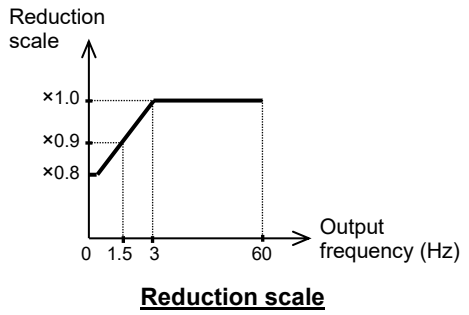

Reduction scale

(Example) NES1-015LB* (rated current: 7.1 (A)), Base frequency 60 Hz, "b012=7.1 (A) (1.00×rated current)"

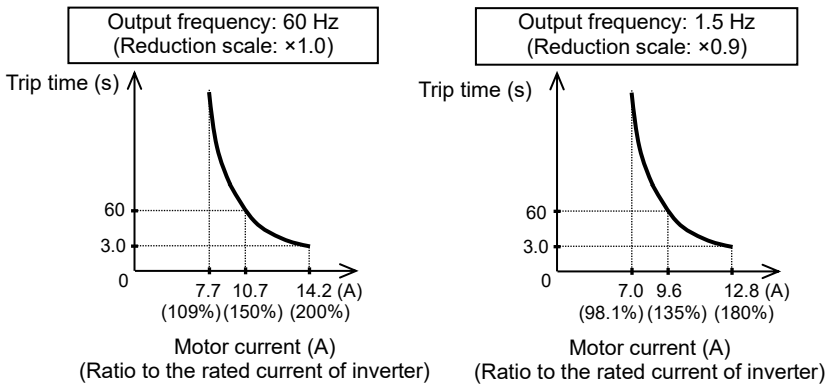

(c) Free setting of electronic thermal characteristic
To protect the motor against overheating, you can set the electronic thermal characteristic freely according to the load on the motor.
The range of setting is shown in the figures below.

Item	Function code	Range of data	Description
Free setting electronic thermal frequency 1 / 2 / 3	b015/b017/b019	0. to 400. (Hz)	Setting of frequency at each breakpoint Setting condition: b015 ≤ b017 ≤ b019
Free setting, electronic thermal current 1 / 2 / 3	b016/b018/b020	(0.00 to 1.00) × inverter rated current (A)	Setting of the current at each breakpoint

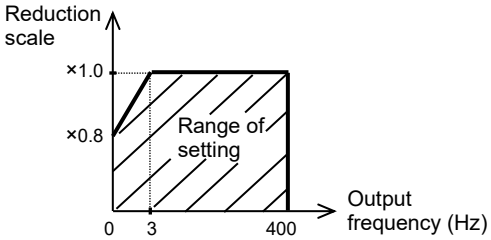

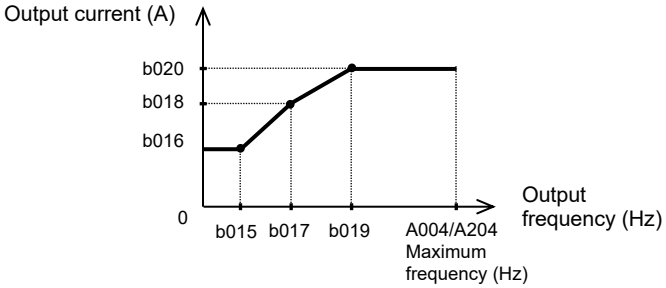

(3) Thermal warning

You can configure this function so that the inverter outputs a warning signal "THM" before the electronic thermal protection operates against motor overheat. You can also set the threshold level to output a warning signal with the electronic thermal warning level (C061).
To output the warning signal, assign function "13" (THM) to the intelligent output [11] function (C021) or the intelligent relay function (C026).
And electronic thermal overload monitoring is displayed on "d104".

Item	Function code	Data	Description
Electronic thermal warning level	C061	0.	Disabling the thermal warning output.
		1. to 100. (%) (*1)	Setting of the threshold level to output the thermal warning signal.

(*1) Set the ratio (%) of the warning level to the integrated value of the electronic thermal characteristic. A setting of 100 % corresponds to the inverter trip due to overload (error code "E05").

7.8.3 Overload restriction/overload notice (b021 to b026,b221 to b223,C040,C041/C241)

(1) Overload restriction function

The overload restriction function allows you to make the inverter monitor the motor current during acceleration or constant speed operation, and automatically reduce the output frequency according to the deceleration rate at overload restriction when the motor current reaches the overload restriction level.
This function prevents the moment of inertia from excessively increasing during motor acceleration and prevents the inverter from tripping because of overcurrent, even when the load changes suddenly during the constant speed operation of the motor.
You can specify two types of overload restriction operation by setting functional items "b021/b022/b023 (b221/b222/b223)" and functional items "b024/b025/b026" separately.
To switch the overload restriction operation between the two settings (setting with "b021/b022/b023 (b221/b222/b223)" and setting with "b024/b025/b026"), assign function "39" (OLR) to one of the intelligent input functions [1] to [5] (C001 to C005). Turn the "OLR" signal ON and OFF to switch between the two settings. (ON: "b024/b025/b026" is valid, OFF: "b021/b022/b023 (b221/b222/b223)" is valid)
The overload restriction level specifies the current at which to trigger the overload restriction function.
The deceleration rate at overload restriction specifies the length of time to decelerate the motor from the maximum frequency to 0 Hz.
When this function operates during acceleration, the acceleration time is prolonged over the set time.
If the value set as the deceleration rate at overload restriction (b023/b223/b026) is too small, the inverter automatically decelerates the motor even during acceleration because of the overload restriction, and may trip because of the overvoltage caused by the energy regenerated by the motor.
If this function operates during acceleration and the output frequency cannot reach the target frequency, try to make the following adjustments:

- Increase the acceleration time. (refer to subsection "7.2.6 Acceleration/deceleration time setting")
- Increase the overload restriction level (b022/b222/b025).

Item	Function code	Data or range of data	Description
Overload restriction operation mode	b021/b221 b024	00	Disabling the overload restriction.
		01	Enabling the overload restriction during acceleration and constant speed operation.
		02	Enabling the overload restriction during constant speed operation.
Overload restriction level	b022/b222 b025	(0.20 to 2.00) × inverter rated current (A)	Current at which to trigger the overload restriction.
Deceleration rate at overload restriction	b023/b223 b026	0.1 to 3000. (s)	Deceleration time to be applied when the overload restriction operates
Intelligent input function [1] to [5]	C001 to C005	39	OLR: Terminal to switch the overload restriction setting

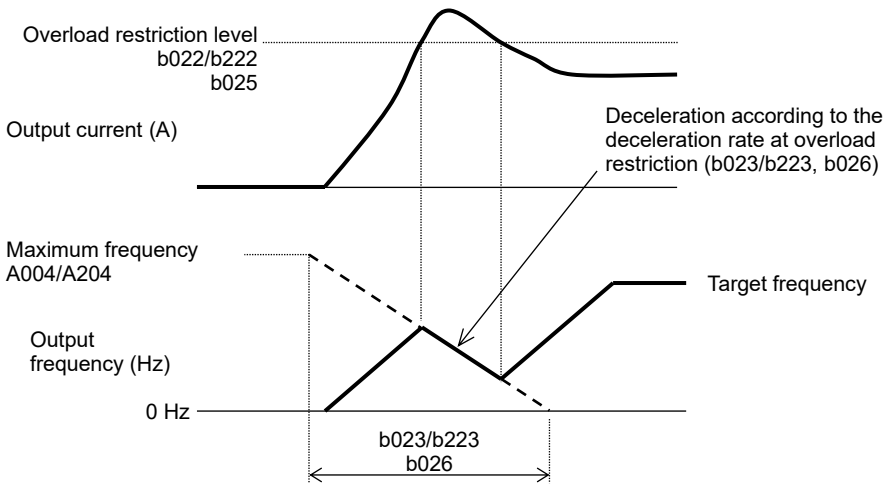

(2) Overload notice function

The overload notice function allows you to make the inverter output an overload notice signal "OL" before tripping because of overload.
You can use this function effectively to prevent the machine (e.g., a conveyor) driven by the inverter from being overloaded and prevent the machine from being stopped by the overload protection of the inverter.
To use this function, assign function "03" (OL) to the intelligent output [11] function (C021) or the intelligent relay function (C026).

Item	Function code	Data or range of data	Description
Output mode of overload warning	C040	00	Enabling the warning output during acceleration, deceleration, and constant speed.
		01	Enabling the warning output during constant speed only.
Overload warning level	C041/ C241	(0.00 to 2.00) × inverter rated current (A)	Specifying the current at which to output the "OL" signal (overload advance notice signal).
Intelligent output [11] function Intelligent relay function	C021 C026	03	OL: Overload Advance Notice Signal

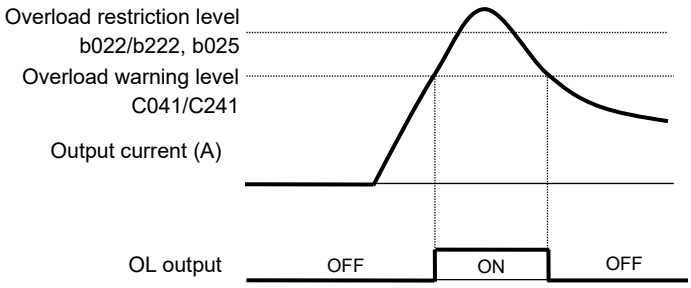

7.8.4 Overcurrent restraint (b027)

The overcurrent restraint function allows you to restrain the overcurrent that can occur when the output current sharply increases because of rapid acceleration.
You can enable or disable the function by setting the OC suppression selection (b027).

Item	Function code	Data or range of data	Description
OC suppression selection	b027	00	Disabling the overcurrent restraint.
		01	Enabling the overcurrent restraint.

Note1: When using the inverter for a lift, disable the overcurrent restraint function. If the overcurrent restraint functions during the lift operation, the lift may slide down because of insufficient torque.
Note2: When an acceleration time is extremely short for the load, overcurrent trip may occur. In this case, please adjust an acceleration time.
Note3: In the case of enabling the overcurrent restraint, it may occur an inverter trip at the time of overcurrent restraint function operation depending on a motor.

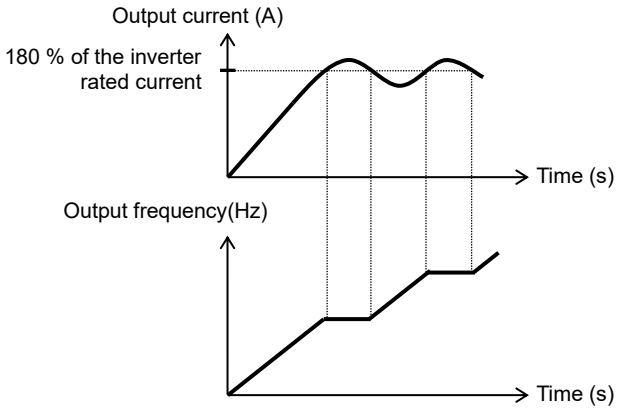

7.8.5 Overvoltage suppression during deceleration (b130 to b134)

The overvoltage suppression function allows you to prevent the inverter from tripping because of the overvoltage that can be caused by the energy regenerated by the motor during deceleration.
You can enable or disable the function by setting the deceleration overvoltage suppression enable (b130).
When "01" (enabled (controlled deceleration)) is specified for the deceleration overvoltage suppression enable (b130), the inverter will decelerate by keeping the DC bus voltage at deceleration overvoltage suppression level (b131).
When "02" (enabled at the deceleration (with acceleration)) or "03" (enabled at the constant and deceleration (with acceleration)) is specified for the deceleration overvoltage suppression enable (b130), the inverter will start acceleration (the limit: maximum frequency (A004)) according to the deceleration overvoltage suppression const. (b132) if the DC bus voltage exceeds the deceleration overvoltage suppression level (b131). Subsequently, the inverter will restart deceleration when the DC bus voltage falls below "b131".

Item	Function code	Data or range of data	Description
Deceleration overvoltage suppression enable	b130	00	Disabled
		01	Enabled (with controlled deceleration) (See example 1.) (*5)
		02	Enabled at the deceleration (with acceleration) (See example 2.)
		03	Enabled at the constant and deceleration (with acceleration)
Deceleration overvoltage suppression level (*4)	b131	330. to 390. (VDC)	Level setting for 200 V class models
		660. to 780. (VDC)	Level setting for 400 V class models
Deceleration overvoltage suppression const.	b132	0.10 to 30.00 (s)	Specifying the acceleration rate from 0 Hz to maximum frequency (A004) when the function is enabled. (valid when b130=02,03)
Deceleration overvoltage suppression proportional gain	b133	0.00 to 5.00	Overvoltage suppression proportional gain setting (valid when b130=01)
Deceleration overvoltage suppression integral time	b134	0.0 to 150.0 (s)	Overvoltage suppression integral time setting (valid when b130=01)

See next page for the detail of (*1) to (*6).

(Example 1) When "b130" is "01":

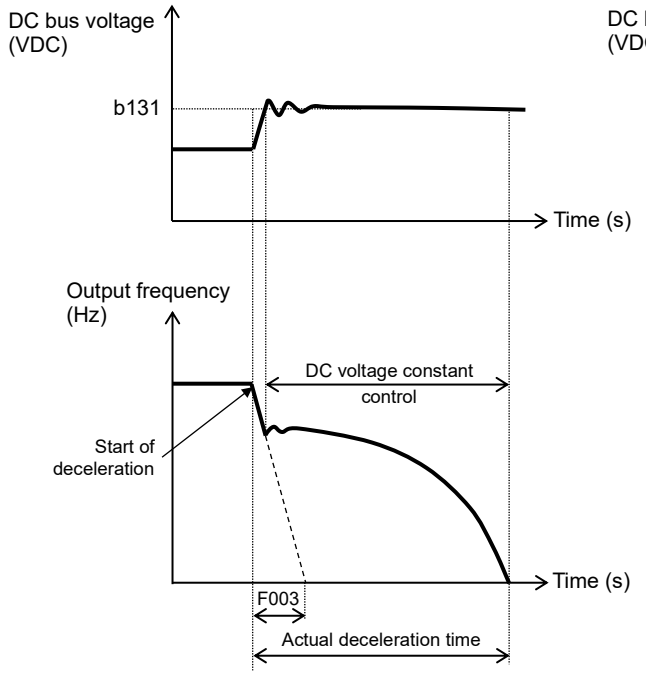

(Example 2) When "b130" is "02" or "03":

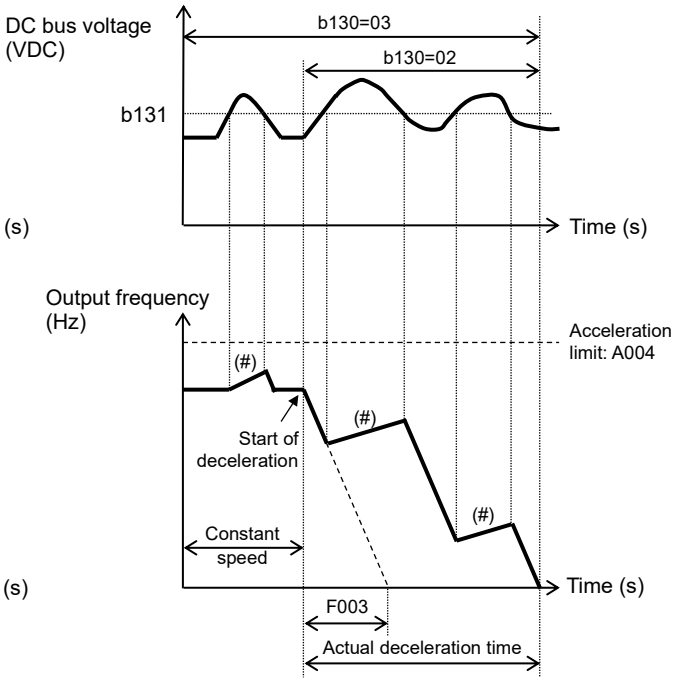

(#): Acceleration according to the setting of "b132"

(*1) When this function is enabled, the actual deceleration time may be prolonged over the set time.
Note particularly that the motor may not be decelerated if the setting of "b131" is too small when "02" or ”03” is specified for the deceleration overvoltage suppression enable (b130).
(*2) This function does not maintain the DC bus voltage at a constant level. Therefore, the inverter trips due to overvoltage may be caused by the setting of the deceleration rate or by a specific load condition.
(*3) When this function is enabled, the inverter may require a long time to decelerate and stop the motor if the load on the motor or the moment of inertia on the motor is under a specific condition.
(*4) If a voltage lower than the input voltage is specified for "b131", the motor cannot be stopped. In this case, it is able to shut off the inverter output by power off the inverter or by operating the free-run stop (FRS) function (refer to subsection "7.7.3 Free-run stop (FRS) function").
(*5) When "01" is specified for "b130", PI control is performed so that internal DC bus voltage is maintained at a constant level.
- Setting a higher proportional gain (b133) results in a faster response. However, an excessively high proportional gain causes control to diverge and results in the inverter easily tripping.
- Setting a shorter integral time (b134) results in a faster response. However, an excessively short integral time results in the inverter easily tripping.
- If the situation that the motor is not able to decelerate during overvoltage suppression continues about 10 seconds, it will be forced to decelerate by setting of "F003". (This function is added from NE-S1 Ver 2.0.)

(*6) When "02" or "03" is specified for "b130", the motor may not be stopped if the stop command with short deceleration time is given during operating this function. In this case, it is able to shut off the inverter output by power off the inverter or by operating the free-run stop (FRS) function (refer to subsection "7.7.3 Free-run stop (FRS) function").

7.8.6 External trip (EXT) function (C001 to C005)

The external trip function allows you to make the inverter trip according to the error (trip) signal generated by an external system.
To use this function, assign function "12" (EXT) to one of the intelligent input [1] to [5] functions (C001 to C005).
When the "EXT" terminal is turned ON, the inverter trips with error code "E12" displayed and stops the output.
After the inverter trips with error code "E12" displayed, it will not be recovered from tripping, even when the error signal from the external system is reset (i.e., the "EXT" terminal is turned off).
To recover the inverter from tripping, reset the inverter or turn the inverter power off and on.

Item	Function code	Data	Description
Intelligent input [1] to [5] function	C001 to C005	12	EXT: External trip

Note: Do not turn ON the "EXT" terminal after the inverter power is shut off. Otherwise, the error history may not be stored correctly.

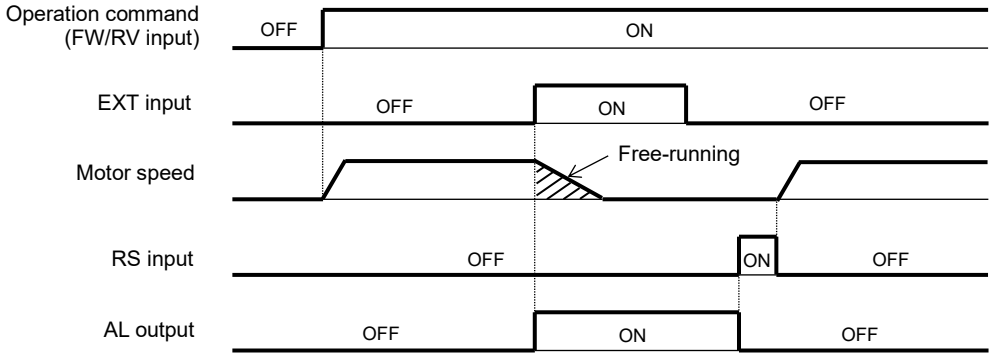

7.8.7 Automatic carrier frequency reduction (b083,b089)

The automatic carrier frequency reduction function automatically reduces the carrier frequency according to the increase in output current.
To enable this function, specify "01" or "02" for automatic carrier frequency reduction (b089).

Item	Function code	Range of data	Description
Automatic carrier frequency reduction	b089	00	Disabled
		01	Enabled, depending on the output current
		02	Enabled, depending on the heatsink temperature

Example) "b089=01"

When the output current increases to 60 %, 72 %, 84 %, or 96 % of the inverter rated current, this function reduces the carrier frequency to 12, 9, 6, or 3 kHz, respectively. This function restores the original carrier frequency when the output current decreases to 5 % lower than each reduction start level.

Carrier frequency reduction start level (Restoration level)		Carrier frequency after reduction (kHz)
Current dependence [b089=01]	Heatsink temperature dependence [b089=02]	
Less than 60 % of rated current	Less than 45°C	15.0
60 % (55 %) of rated current	45°C (40°C)	12.0
72 % (67 %) of rated current	55°C (50°C)	9.0
84 % (79 %) of rated current	65°C (60°C)	6.0
96 % (91 %) of rated current	75°C (70°C)	3.0

Action of "b089=01":

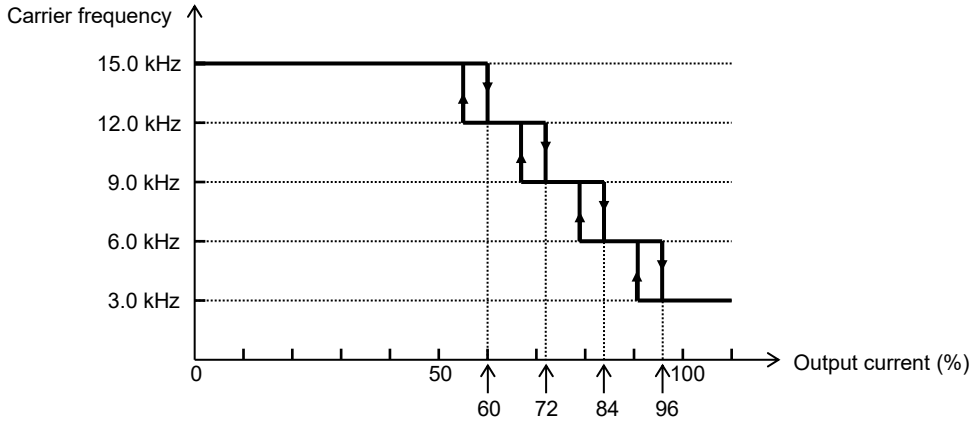

Action of "b089=02":

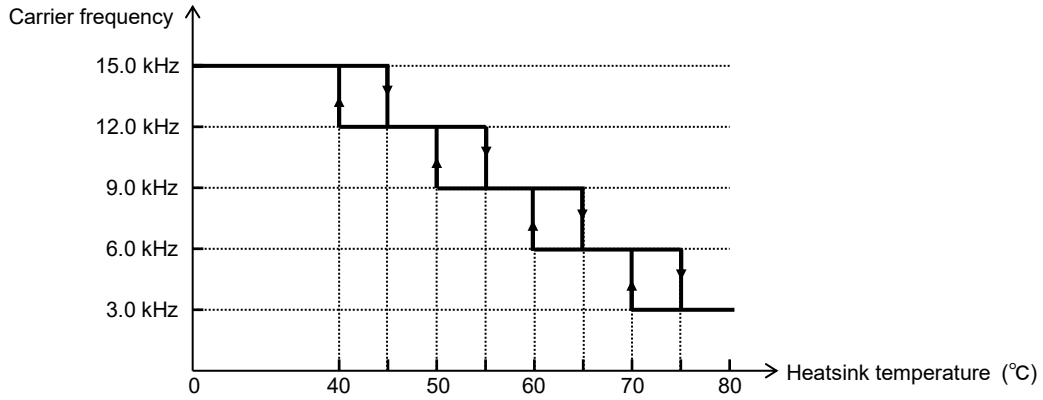

The rate of carrier frequency reduction is 2 kHz per second.
The maximum limit of carrier frequency change by this function is the value specified for the carrier frequency (b083); the minimum limit is 3 kHz. If 3 kHz or less frequency has been specified for "b083", this function is disabled regardless of the setting of "b089".

7.8.8 Running signal (RUN) (C021,C026)

While the inverter is operating, it outputs the running signal "RUN" via the intelligent output terminal [11] or the intelligent relay terminal.
To use this signal function, assign function "00" (RUN) to the intelligent output [11] function (C021) or the intelligent relay function (C026).
The inverter outputs the "RUN" signal even while operating the DC braking. The following figure shows a timing chart for the signal output.

Item	Function code	Range of data	Description
Intelligent output [11] function Intelligent relay function	C021 C026	00	RUN: Run Signal

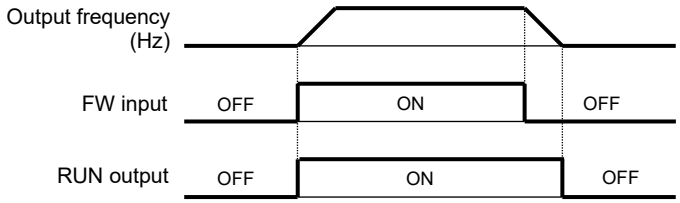

7.8.9 Frequency arrival signals (FA1, FA2, FA3) (C021,C026,C042,C043)

The inverter outputs a frequency arrival signal "FA1", "FA2" or "FA3" when the inverter output frequency reaches a set frequency.
Assign the following functions to the intelligent output [11] function (C021) or the intelligent relay function (C026): "01" (FA1), "02" (FA2), "06" (FA3).

The signal hysteresis of the function "01" (FA1) or "02" (FA2) is as follows:
When the signal is on: ("set frequency" - "1 % of maximum frequency") (Hz)
When the signal is off: ("set frequency" - "2 % of maximum frequency") (Hz)

The signal hysteresis at acceleration with function "06" (FA3) is as follows:
When the signal is on: ("set frequency" - "1 % of maximum frequency") (Hz)
When the signal is off: ("set frequency" + "2 % of maximum frequency") (Hz)

The signal hysteresis at deceleration with function "06" (FA3) is as follows:
When the signal is on: ("set frequency" + "1 % of maximum frequency") (Hz)
When the signal is off: ("set frequency" - "2 % of maximum frequency") (Hz)

Item	Function code	Range of data	Description
Frequency arrival setting for acceleration	C042	0.00 (Hz)	Disabling the output of frequency arrival signal.
		0.01 to 400.0 (Hz)	Enabling the output of frequency arrival signal.
Frequency arrival setting for deceleration	C043	0.00 (Hz)	Disabling the output of frequency arrival signal.
		0.01 to 400.0 (Hz)	Enabling the output of frequency arrival signal.
Intelligent output [11] function Intelligent relay function	C021 C026	01	FA1: Frequency Arrival Type 1 - Constant Speed
		02	FA2: Frequency Arrival Type 2 - Over frequency
		06	FA3: Frequency Arrival Type 3 - Set frequency

(1) Signal output when the constant-speed frequency is reached (01: FA1)
The inverter outputs the signal "FA1" when the output frequency reaches the frequency command specified by a frequency setting (F001, A020, A220) or multi-speed frequency setting (A021 to A027).

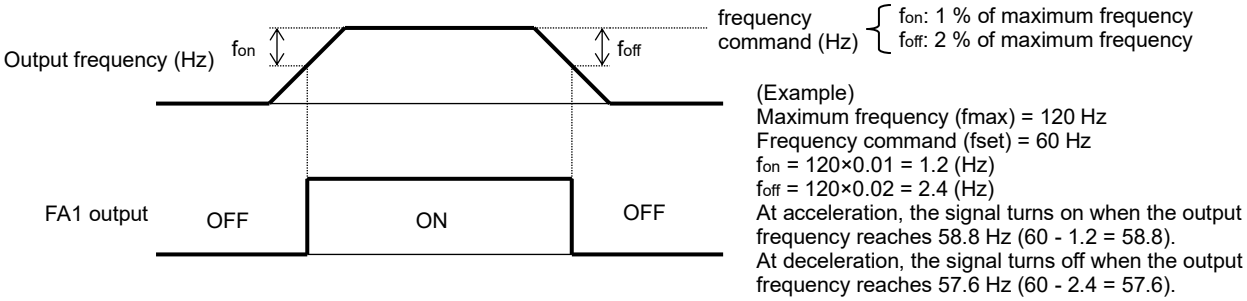

(2) Signal output when the set frequency is exceeded (02: FA2)
The inverter outputs the signal "FA2" when the output frequency exceeds the acceleration or deceleration frequency specified by a frequency setting (C042 or C043).

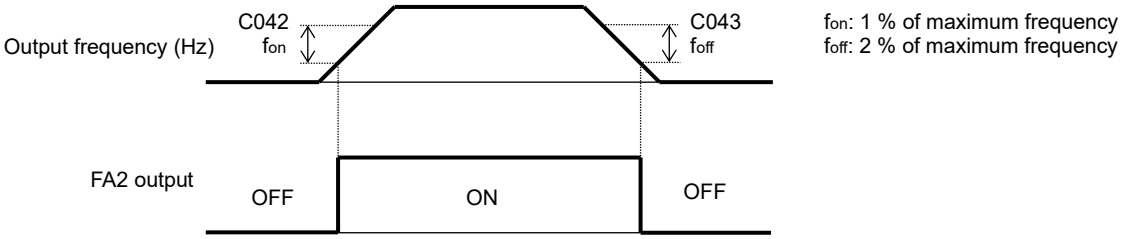

(3) Signal output only when the set frequency is reached (06: FA3)
The inverter outputs the signal "FA3" only when the output frequency reaches the frequency specified by a frequency setting (C042 or C043).

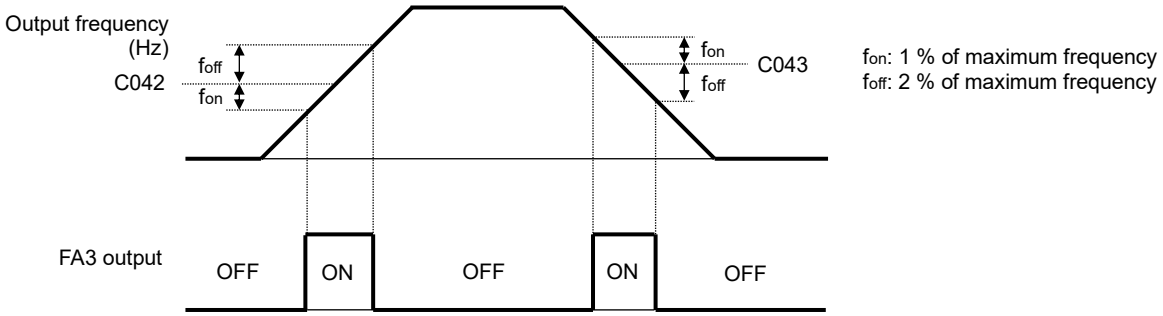

7.8.10 Running time over and power-on time over signals (RNT,ONT) (b034,C021,C026)

The inverter outputs the running time over signal "RNT" or the power-on time over signal "ONT" when the running time or the power-on time is exceeded the time specified as the run/power ON warning time (b034).

Item	Function code	Range of data	Description
Run/power ON warning time	b034	0.	Disabling the signal output.
		1. to 9999.	Setting in units of 10 hours. (range: 10 to 99,990 hours)
		1000 to 6553	Setting in units of 100 hours. (range: 100,000 to 655,350 hours)
Intelligent output [11] function	C021	11	RNT: Run Time Expired
Intelligent relay function	C026	12	ONT: Power ON time Expired

(1) Running time over signal (RNT)
To use this signal function, assign function "11" (RNT) to the intelligent output [11] function (C021) or the intelligent relay function (C026).
Specify the run/power ON warning time (b034).

(2) Power-on time over signal (ONT)
To use this signal function, assign function "12" (ONT) to the intelligent output [11] function (C021) or the intelligent relay function (C026).
Specify the run/power on warning time (b034).

7.8.11 0Hz speed detection signal (ZS) (C063,C021,C026)

The inverter outputs the 0 Hz speed detection signal "ZS" when the inverter output frequency falls below the threshold frequency specified as the zero speed detection level (C063).
To use this function, assign function "21" (ZS) to the intelligent output [11] function (C021) or the intelligent relay function (C026).

Item	Function code	Data or range of data	Description
Zero speed detection level	C063	0.00 to 100.0 (Hz)	Setting of the frequency to be determined as 0 Hz.
Intelligent output [11] function Intelligent relay function	C021 C026	21	ZS: Zero Hz Speed Detection Signal

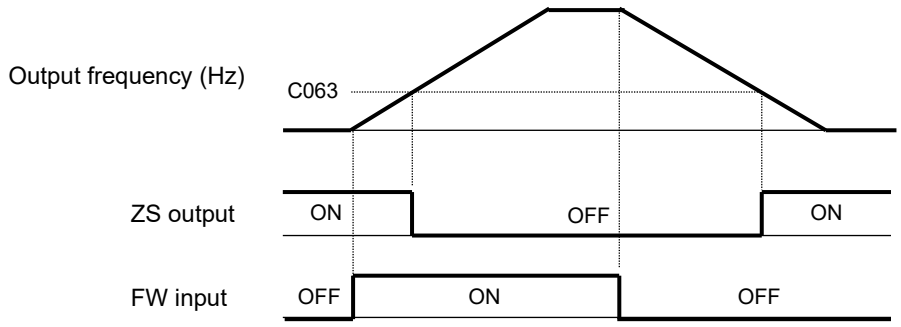

7.8.12 Logic output signal operation function (LOG) (C142,C143,C144,C021,C026)

The logic output signal operation function allows you to make the inverter internally perform a logical operation of output signals.
This function applies to all output signals, except to logic output function (LOG) and No function (NO).
Three types of operators (AND, OR, and XOR) are selectable.

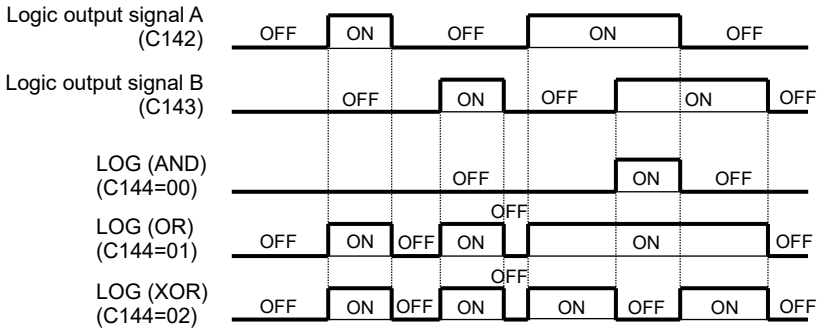

Selected signal	Logic output operand A	Logic output operand B	Logic output operator
33: Logic Output Function (LOG)	C142	C143	C144

(Example) To output the AND of the run signal (00: RUN) and set the frequency arrival type 2-over frequency (02: FA2) as the logic output signal (LOG) to the intelligent output terminal [11]:
- Intelligent output [11] function (C021): 33 (LOG)
- Logic output operand A (C142): 00 (RUN)
- Logic output operand B (C143): 02 (FA2)
- Logic output operator (C144): 00 (AND)

Item	Function code	Data or range of data	Description
Logic output operand A	C142	Selection of "00" to "60" from the intelligent output functions (except LOG, NO).	Selection of operation-target A
Logic output operand B	C143	Selection of "00" to "60" from the intelligent output functions (except LOG, NO).	Selection of operation-target B
Logic output operator	C144	00	AND
		01	OR
		02	XOR
Intelligent output [11] function Intelligent relay function	C021 C026	33	LOG: Logic Output Function

7.8.13 Network Disconnect Detection signal (NDc) (C077,C021,C026)

This signal function is enabled when Modbus-RTU has been selected for communication.
If a reception timeout occurs, the inverter continues to output the network disconnect detection signal "NDc" until it receives the next data.
Specify the limit time for reception timeout by setting the communication error detection time (C077).

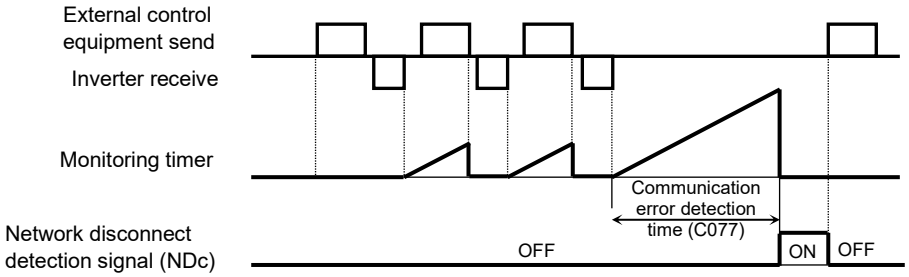

Item	Function code	Data or range of data	Description
Communication error detection time	C077	0.00 to 99.99 (s)	Setting of the limit time for reception timeout.
Intelligent output [11] function Intelligent relay function	C021 C026	32	NDc: Network Disconnect Detection

7.8.14 Starting contact signal (FR) (C021,C026)

The inverter outputs the starting contact signal "FR" while it is receiving an operation command.
The "FR" signal is output, regardless of the setting of the run command source (A002/A202).
If the forward operation (FW) and reverse operation (RV) commands are input at the same time, the inverter stops the motor operation.

Item	Function code	Data	Description
Intelligent output [11] function Intelligent relay function	C021 C026	41	FR: Starting Contact Signal

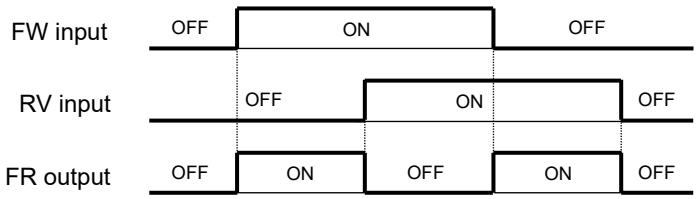

7.8.15 Heatsink overheat warning signal (OHF) (C064,C021,C026)

The inverter monitors the temperature of its internal heatsink, and outputs the heatsink overheat warning signal "OHF" when the temperature exceeds the heatsink overheat warning (C064).

Item	Function code	Data or range of data	Description
Heatsink overheat warning	C064	0. to 110. (℃)	Setting of the threshold temperature at which to output the heatsink overheat warning signal.
Intelligent output [11] function Intelligent relay function	C021 C026	42	OHF: Heatsink Overheat Warning

7.8.16 Low current detection (LOC) signal (C038,C039,C021,C026)

The inverter outputs the low current detection signal "LOC" when the inverter output current falls to the low current detection level (C039) or less.
You can select one of the two signal output modes with the output mode of low current detection (C038). In one mode, the "LOC" signal output is always enabled during the inverter operation. In the other mode, the "LOC" signal output is enabled only while the inverter is driving the motor for constant-speed operation.

Item	Function code	Data or range of data	Description
Output mode of low current detection	C038	00	Enabling the signal output during operation.
		01	Enabling the signal output only during constant-speed operation. (*1)
Low current detection level	C039	(0.00 to 2.00) × Inverter rated current (A)	Setting of the threshold current level at which to output the low current detection signal.
Intelligent output [11] function Intelligent relay function	C021 C026	43	LOC: Low current detection signal

(*1) When "01" (control terminal) is selected as frequency source (A001/A201), there is a case that inverter does not recognize the speed as constant value due to sampling. In this case, adjusting is to be made by setting "C038=00" (valid during operation) or increasing analog input filter (A016).

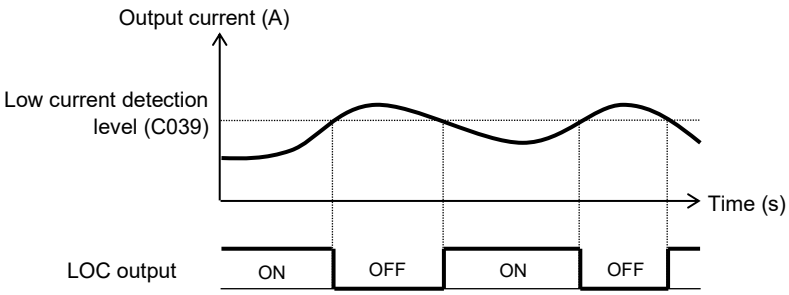

7.8.17 Inverter ready signal (IRDY) (C021,C026)

The inverter outputs the inverter ready signal "IRDY" when it is ready for operation (i.e., when it can receive an operation command).
The inverter can recognize only the operation command that is input while the "IRDY" signal is output.
If the "IRDY" signal is not output, check whether the input power supply voltage (connected to the R, S, and T terminals at three phases model, or the L1, N terminals at single phase model) is within the range of specification.

Item	Function code	Data or range of data	Description
Intelligent output [11] function Intelligent relay function	C021 C026	50	IRDY: Inverter Ready Signal

7.8.18 Forward rotation signal (FWR) (C021,C026)

The inverter continues to output the forward rotation signal "FWR" while it is driving the motor for forward operation. The "FWR" signal is turned off while the inverter is driving the motor for reverse operation or stopping the motor.

Item	Function code	Data or range of data	Description
Intelligent output [11] function Intelligent relay function	C021 C026	51	FWR: Forward Rotation

7.8.19 Reverse rotation signal (RVR) (C021,C026)

The inverter continues to output the reverse rotation "RVR" signal while it is driving the motor for reverse operation. The "RVR" signal is turned off while the inverter is driving the motor for forward operation or stopping the motor.

Item	Function code	Data or range of data	Description
Intelligent output [11] function Intelligent relay function	C021 C026	52	RVR: Reverse Rotation

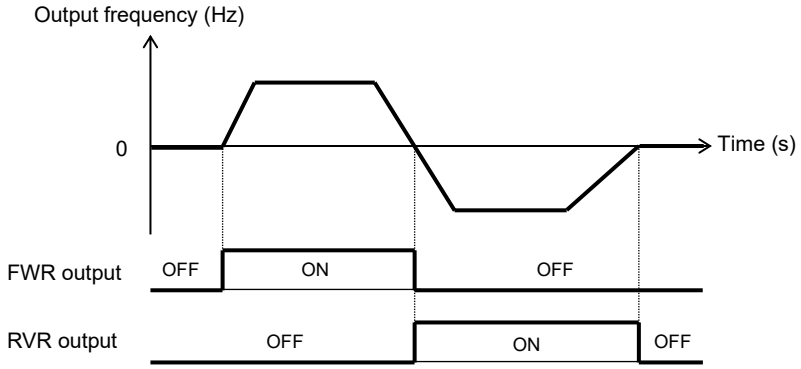

7.8.20 Major failure signal (MJA) (C021,C026)

The inverter outputs the major failure signal "MJA" in addition to an alarm signal "AL" when it trips because of one of the errors listed below.

No.	Error code	Description
1	E08.*	Memory error
2	E10.*	Current detection error
3	E11.*	CPU error
4	E14.*	Ground fault protection
5	E19.*	Thermal detection error

Item	Function code	Data or range of data	Description
Intelligent output [11] function Intelligent relay function	C021 C026	53	MJA: Major Failure Signal

7.8.21 Window comparator (WC) (detection of terminal disconnection: Dc) (b060 to b062,b070,C021,C026)

The window comparator function outputs signal "WC" when the values of analog inputs O/OI is within the maximum and minimum limits specified for the window comparator. You can monitor analog inputs with reference to arbitrary levels (to find input terminal disconnection and other errors).
You can specify a hysteresis width for the maximum-limit and minimum-limit levels of the window comparator.
You can fix the analog input data to be applied to an arbitrary value when "WC" is output. For this purpose, specify a desired value as the operation level at O/OI disconnection (b070). When "no" is specified, the analog input data is reflected as input.
Output signal of "Dc" is the same as that of "WC".

Item	Function code	Range of data	Description
Maximum-limit level of window comparator (O/OI)	b060	"b061 + b062 × 2 (minimum of 0)" to 100. (%)	Setting of maximum-limit level
Minimum-limit level of window comparator (O/OI)	b061	0 to "b060 - b062 × 2 (maximum of 100)" (%)	Setting of minimum-limit level
Hysteresis width of window comparator (O/OI)	b062	0 to "(b060 - b061) / 2 (maximum of 10)" (%)	Setting of hysteresis width for maximum-limit and minimum-limit levels
Operation level at O/OI disconnection	b070	0. to 100. (%) or "no" (ignore)	Setting of the analog input value to be applied when "WC (Dc)" is output.
Intelligent output [11] function Intelligent relay function	C021 C026	27	Dc: Analog Input Disconnect Detection
		54	WC: Window Comparator for Analog Input

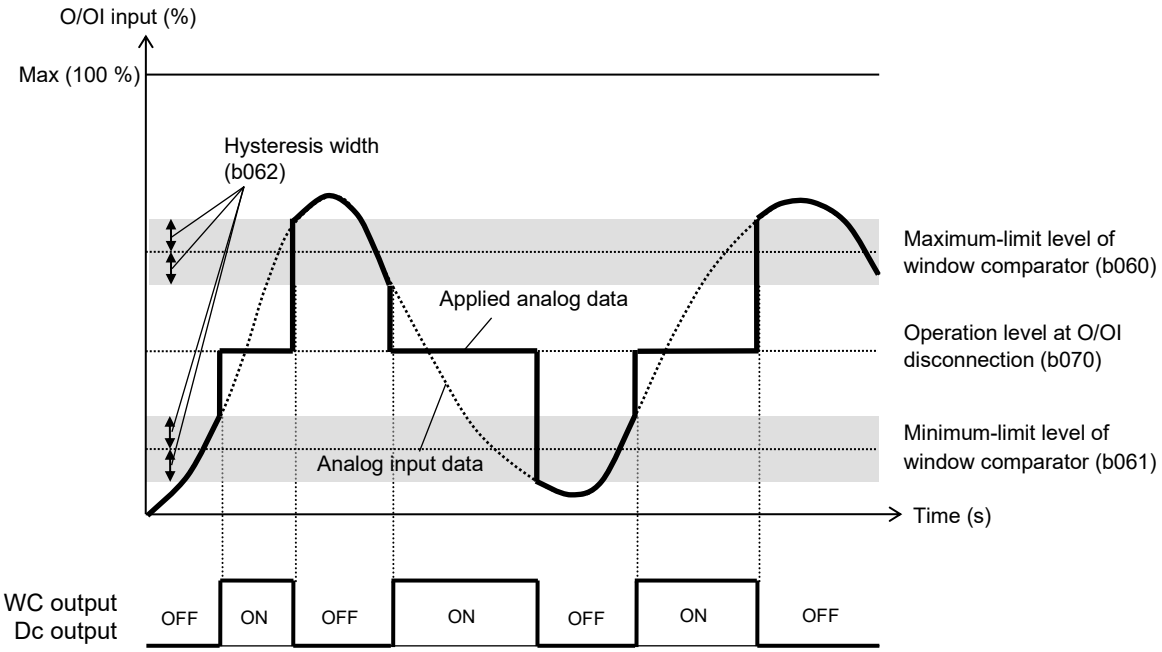

(Note) To use as disconnection detection, set the disconnection detection level to the maximum-limit level of window comparator (O/OI) (b060).
(The normal O/OI input uses an area exceeding the "b060", and the disconnection is detected below the "b060".)

7.8.22 Frequency command source signal (FREF)

This function outputs a "FREF" signal when the "A001=02". However, this function does not output the signal when the second control mode or the "A001≠02".

Item	Function code	Data	Description
Intelligent output [11] function Intelligent relay function	C021 C026	58	FREF: Frequency Command Source Signal

7.8.23 RUN command source signal (REF)

This function outputs a "REF" signal when the "A002=02". However, this function does not output the signal when the second control mode or the "A002≠02".

Item	Function code	Data	Description
Intelligent output [11] function Intelligent relay function	C021 C026	59	REF: Run Command Source Signal

7.8.24 2nd Motor in operation (SETM)

When the inverter is in 2nd motor control, inverter outputs a "SETM" signal.

Item	Function code	Data	Description
Intelligent output [11] function Intelligent relay function	C021 C026	60	SETM: 2nd Motor Selection Signal

7.8.25 Ground fault detection (C155)

When the inverter power is turned on, then select whether to perform ground fault detection.
Ground fault might be detected when the inverter power is turned on while the motor is rotating.

Item	Function code	Data	Description
Ground fault detection	C155	00	00: Disabled
		01	01: Enabled

7.8.26 Out phase loss detection (C157)

This function is to choose whether to perform output phase loss detection.
This function works when the output frequency is not less than 5 Hz but not more than 100 Hz.
In some cases depending on the state of the output current is low or not detected, this function doesn't work. In addition, this function may be detected when hunting.

Item	Function code	Data	Description
Output phase loss detection	C157	00	00: Disabled
		01	01: Enabled

7.9 Initializing

7.9.1 Initialization setting (b084,b085,b094,b180)

The initialization function allows you to initialize the adjusted settings on the inverter to restore the factory (default) settings. You can also clear the trip history data alone.
The cumulative operation RUN time / power-on time are not cleared.

Item	Function code	Data	Description
Initialization mode (parameters or trip history) Note3)	b084	00	Disabling
		01	Clearing the trip history
		02	Initializing all parameters
		03	Clearing the trip history and Initializing all parameters
Initialization target data setting Note4)	b094	00	All parameters
		01	All parameters except input/output terminal settings and communication data settings Note2)
Initial data selection Note1) Note4)	b085	00	Mode 0 (Restricted Distribution Code: Other (Standard))
		01	Mode 1 (Restricted Distribution Code: Europe)
		03	Mode 3 (Restricted Distribution Code: China)
Initialization trigger Note3)	b180	00	No action
		01	Initialize

Note1) Refer to the parameter list of Chapter 13 for the difference between Mode 0 (00), Mode 1 (01), and Mode 3 (03) in initial data selection (b085).
Note2) The parameters to be related to are as follows.

Data of "b094"	Function code	Description
Parameters for input/output terminal settings	C001 to C005	Intelligent input [1] to [5] function
	C011 to C015	Intelligent input [1] to [5] active state
	C021	Intelligent output [11] function
	C026	Intelligent relay function
	C031	Intelligent output [11] active state
	C036	Intelligent relay active state
Parameters for communication data settings	C070	Selection of OPE/Modbus
	C071	Communication speed
	C072	Modbus address
	C074	Communication parity
	C075	Communication stop bit
	C076	Communication error selection
	C077	Communication error detection time
	C078	Communication wait time

Note3) Data of "b084", "b180" are not saved in the memory to avoid unintentional initializing.
Note4) "b085", "b094", "C081" (O/OI input gain calibration) are not initialized.

To initialize the inverter, follow the steps below.
(1) Select initialization mode in "b084".
(2) If "b084=02 or 03", select initialization target data in "b094" and restricted distribution code in "b085".
(3) Set "01" in "b180".
(4) The following display appears for a few seconds, and initialization is completed with "d001" displayed.

Display during initialization

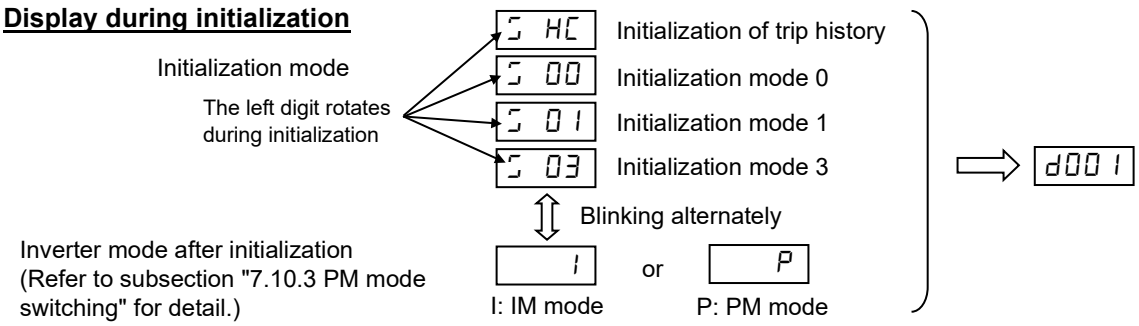

7.10 PM Motor Drive

7.10.1 Limitation

This chapter shows the PM motor drive function that is added from NE-S1 Ver 2.0. There is a limitation in the PM motor drive. Please note below.

(1) About the specification

1. Please use for the application of reduced torque with the starting torque less than 50 %. In case of use other than above, performance of motor control cannot be guaranteed to be sufficient.
2. It is not suitable for at the usage the constant torque, the rapid acceleration/deceleration and low speed driving. Please never use it for the transportation machine, especially the gravity load usage such as elevators.
3. PM motor cannot be driven by the commercial power source directly.
4. The motor can be driven if the load of the moment of inertia is 50 times or less than the motor moment of inertia (H110). When over 50 times the motor moment of inertia, you may not be able to obtain adequate motor characteristics.
5. Two or more motors cannot be driven with one inverter.
6. When the DC braking function is used and the inverter trips by overvoltage, refer to subsection "7.5.22 DC braking (DB) setting" and adjust related parameters.
7. Please drive the motor after the brake is released if there is a maintenance brake. The motor may generate out-of-step if timing is not suitable.
8. When starting, the motor may reverse. Please use the initial magnet position estimation function when the motor reverse rotation may cause trouble the system.
9. When you use the inverter to drive a motor of which the rated current of the motor exceeds the rated current of the inverter, or the capacity is two classes lower than the maximum applicable capacity of the inverter, you may not be able to obtain adequate motor characteristics.
10. Please adjust the motor constant settings to the motor to be driven by the inverter. The motor constant data is corresponding to the data of one phase of Y connection.
11. When the motor cable is the long distance (more than 20 m as a guide), you may not be able to obtain adequate motor characteristics.
12. Please do not drive the motor that the maximum current of the motor (demagnetization level) falls below about 300 % of the rated current of the inverter. The motor may be demagnetization.
    (Note): Please note the effective value and the peak value. The rated current of the inverter in this guide is the effective value.
13. Please set the carrier frequency (b083) properly for protection from rising temperature of the motor.
14. Please set the PM rated current (H105) to the level of electronic thermal (b012).

(2) About the function

1. When the motor is rotating at the speed of 50 % or less of the base frequency (A003), the motor may restart from 0 Hz at retry if the method of retry is frequency matching.
2. When the method of retry is frequency matching, the motor may generate overcurrent trip if the motor direction of the rotation changes in free-running.
3. When the motor restarts with frequency matching at 120 Hz or more, the motor may generate overcurrent trip.
   When the motor cable is the long distance (more than 20 m as a guide) if the method of retry is frequency matching, the motor may generate overcurrent trip.
   Please restart after stopping the motor with the DC braking function or the external brake, etc.
4. A part of function cannot be used. Please refer to subsection "7.10.2 Invalid functions" for details.

7.10.2 Invalid functions

The following functions are invalid at the PM motor drive.

Function	Related code	Limitation method
2nd motor control	Item of *2**	Example: A201
	C001 to C005	08 (SET)
	C021, C026	60 (SETM)
Jogging	A038, A039	
	C001 to C005	06 (JG)
IM control	A041 to A044, A046, A047, b100 to b113, H003, H004, H006	
V/f gain	A045	
AVR	A081 to A084	
Energy-saving operation	A085, A086	
Restarting with active frequency matching	b001, b008 Note)	02 (Resume operation after active frequency matching) 03 (After active frequency matching, deceleration stop and alarm output after trip)
	b088, C103 Note)	01 (Restart from active frequency matching)
	b028 to b030	
Over current suppression	b027	
Reduced voltage start	b036	

Note) The PM motor cannot perform active frequency matching by its specification. Instead of active frequency matching, PM mode prepares the frequency matching as the restart method, and if the limitation method in the right column is selected to this related code, it will automatically switch to frequency matching.

(Remarks) Restart with frequency matching
This is a restart method to detect the motor rotation frequency by the motor residual voltage during rotation and restart from the detected frequency. About active frequency matching, refer to subsection "7.7.1 (4) Restarting methods".

7.10.3 PM mode switching (b171,b180)

It changes to the PM mode by setting the initialization trigger (b180) to "01" after setting the inverter mode selection (b171) to "03", and initialization is executed.

■ When using this mode, observe the following precautions.

1. When "01" is set on the initialization trigger (b180), and "SET" or "STR" key is pressed, initialization starts immediately and there is not any way to restore the previous parameter settings.
   All data will be initialized regardless the setting of the initialization target data setting (b094).
2. When display is restricted by the function code display restriction (b037) or software is locked by the software lock mode selection (b031), you cannot initialize because the function codes of initialization are no-display.

Item	Function code	Data or range of data	Description
Inverter mode selection	b171	00	Disable
		01	IM mode
		03	PM mode
Initialization trigger	b180	00	No action
		01	Perform initialization

■ Way to PM mode switching (using the NES1-OP)

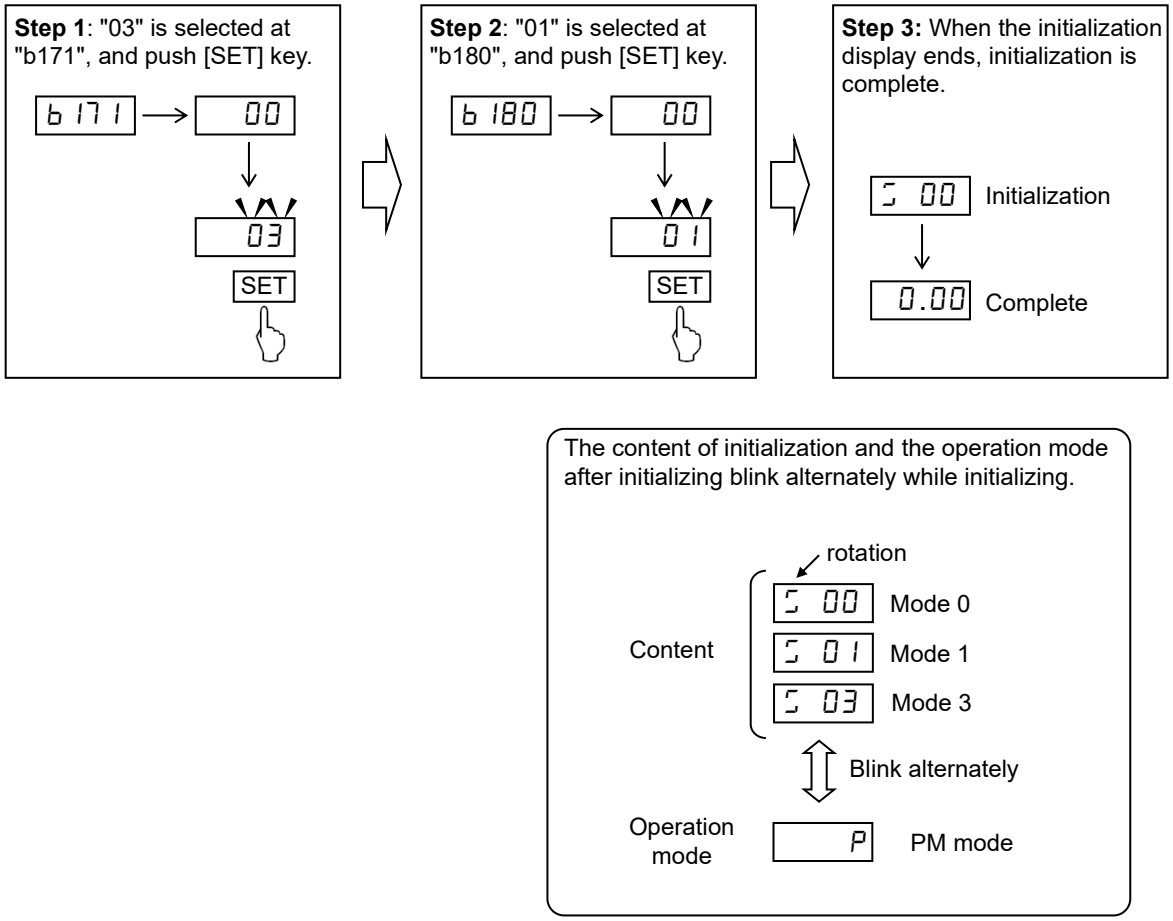

Note 1: For prevent from initializing by mistake, "b171" and "b180" are restored to "00" after initializing or re-power supply. Please set it every time if you initialize.

Note 2: Even if the initialization is performed, the initial data selection (b085) and the O/OI input gain calibration (C081) are not initialized.

Note 3: There is no way to restore the previous parameter setting after initialization.

7.10.4 Motor constants selection (H101 to H114)

When PM motor will be driven by the inverter, the motor constant settings need to be adjusted for the motor characteristics.
The motor constants can be selected from the following three types:

(1) Motor constants of Hitachi standard PM motor.
⇒ When "00" is set on PM motor code setting (H102), motor constants use "H106" to "H110". Initial values of "H106" to "H110" are set on motor constants of Hitachi standard PM motor.

(2) Motor constants tuned by auto-tuning function.
⇒ When "01" is set on PM motor code setting (H102) after the auto-tuning allows, motor constants use automatically measure values "H111" to "H114" and Hitachi standard motor value "H110".

(3) Arbitrarily motor constants are set.
⇒ In above-mentioned both (1) and (2) cases, motor constants can be changed to the given value. Please change the value of "H106" to "H110" (at "H102=00"), or "H110" to "H114" (at "H102=01").

Item	Function code	Data or range of data	Description
PM motor rated voltage	H101	200 V class: 100.0 to 240.0 (V) 400 V class: 200.0 to 480.0 (V)	The rated voltage of PM motor.
PM motor code setting	H102	00 (Hitachi standard)	Use "H106" to "H110" at PM motor constants
		01 (Auto-Tuning)	Use "H110" to "H114" at PM motor constants
PM motor capacity (*1)	H103	0.10 to 7.50 (kW)	The rated capacity of PM motor.
PM motor pole setting	H104	2 to 48 (poles)	The number of motor poles of PM motor.
PM rated current	H105	(0.20 to 1.00) × inverter rated current (A)	The rated current of PM motor.
PM motor constants of Hitachi standard motor			Motor constant settings when auto-tuning data does not use. The initial values are motor constants of Hitachi standard motor.
PM const R (Resistance)	H106	0.001 to 65.535 (Ω)	
PM const Ld (d-axis inductance)	H107	0.01 to 655.35 (mH)	
PM const Lq (q-axis inductance)	H108	0.01 to 655.35 (mH)	
PM const Ke (Induction voltage constant) (*2)	H109	0.1 to 6553.5 (mV/(rad/s))	
PM const J (Moment of inertia) (*3)	H110	0.001 to 9999.000 (kgm^2)	
PM motor constants tuned by auto-tuning			Automatically measured motor constants when the auto-tuning is executed, and they are set. After auto-tuning, you can be changed to the given value.
PM const R (Resistance, Auto)	H111	0.001 to 65.535 (Ω)	
PM const Ld (d-axis inductance, Auto)	H112	0.01 to 655.35 (mH)	
PM const Lq (q-axis inductance, Auto)	H113	0.01 to 655.35 (mH)	
PM const Ke (Induction voltage constant, Auto) (*2)(*4)	H114	0.1 to 6553.5 (mV/(rad/s))	

(*1) Please pay attention that settings of "H104" to "H110", "A003" and "A004" will be changed automatically, when PM motor capacity (H103) is changed.
(*2) PM induction voltage constant Ke is the peak voltage of one phase of per electrical angle speed (rad/s).
(*3) Set the PM motor constant J (H110: moment of inertia) to a value (kgm^2) that is added the moment of inertia of the load machine that is converted to the motor shaft data and the moment of inertia of the motor.
(*4) PM induction voltage constant Ke (auto-tuning) is measured only "H001=02 (rotation)".

7.10.5 PM auto-tuning function (A003,A004,A051,H001,H101 to H114)

PM auto-tuning automatically measures motor constants necessary for sensorless vector control at special driving pattern different from usually besides driving, and accuracy of vector control is improved. PM induction voltage constant Ke can be measured only "H001=02 (rotation)". PM moment of inertia J cannot be measured. Please set the PM moment of inertia J is value (kgm^2) that is added the moment of inertia of the load machine that is converted to the motor shaft data and the moment of inertia of the motor, by manual.

■ When using this mode, observe the following precautions.

1. When the inverter drives unknown PM motor with vector control, please measure motor constants by auto-tuning.
2. The measured motor constants are the data of one phase of Y connection.
3. Please use auto-tuning with the motor has stopped. If the motor rotates, correct constant data may not be obtained. (In such cases, the auto-tuning operation may not be completed. If the auto-tuning operation is not completed, press the STOP/RESET key. The operation will end with an error code displayed.)
4. Adjust the settings of base frequency (A003), maximum frequency (A004), PM motor rated voltage (H101), PM motor capacity (H103), PM motor pole setting (H104) and PM rated current (H105) to the motor specifications before performing auto-tuning. If these parameters are not appropriate, correct constant data may not be obtained. (In such cases, the auto-tuning operation may not be completed. If the auto-tuning operation is not completed, press the STOP/RESET key. The operation will end with an error code displayed.)
5. As a measurement guide, this function can be applied to the motors in the maximum applicable capacity class of the inverter or one class lower than the capacity class of the inverter. If this function is used for motors with other capacities or special specs, correct constant data may not be obtained. (In such cases, the auto-tuning operation may not be completed. If the auto-tuning operation is not completed, press the STOP/RESET key. The operation will end with an error code displayed.)
6. Specify "00" (disabling) for the DC braking enable (A051). (The factory setting is "00".)
   If "00" isn't specified for "A051", motor constants cannot be measured by auto-tuning.
7. When the motor cable is the long distance (more than 20 m as a guide), correct constant data may not be obtained.
8. The motor may rotate slightly during auto-tuning with no rotation, but this is not abnormal behavior.
9. The allophone and the vibration may generate during auto-tuning, but this is not abnormal behavior.
10. Do not perform auto-tuning with the shaft of the motor fixed with external brake etc. Otherwise, correct motor constants may not be obtained.
11. Please perform auto-tuning with the load machine attached to the motor. Otherwise, correct motor constants may not be obtained.
12. When "02" (rotation) is set on Auto-tuning selection (H001), the motor will rotate in performing auto-tuning. Please confirm that motor rotation (rotation speed: about 40 % of the base frequency) may not cause trouble to the system.

Item	Function code	Data or range of data	Description
Base frequency (*1)	A003	30.0 to "A004" (Hz)	The base frequency of PM motor.
Maximum frequency (*1)	A004	"A003" to 400.0 (Hz)	The maximum frequency of PM motor.
DC braking enable	A051	00 (Disabled)	
		01 (Enabled during stop)	
		02 (Frequency detection)	
Auto-tuning selection	H001	00 (Disabled)	
		01 (Not rotation)	
		02 (Rotation)	
PM motor rated voltage	H101	200 V class: 100.0 to 240.0 (V) 400 V class: 200.0 to 480.0 (V)	The rated voltage of PM motor.
PM motor code setting	H102	00 (Hitachi standard)	Use "H106" to "H110" at PM motor constants
		01 (Auto-Tuning)	Use "H110" to "H114" at PM motor constants
PM motor capacity (*2)	H103	0.10 to 7.50 (kW)	The rated capacity of PM motor.
PM motor pole setting	H104	2 to 48 (poles)	The number of motor poles of PM motor.
PM rated current	H105	(0.20 to 1.00) × inverter rated current (A)	The rated current of PM motor.
PM motor constants of Hitachi standard motor			Motor constant settings when auto-tuning data does not use. The initial values are motor constants of Hitachi standard motor.
PM const R (Resistance)	H106	0.001 to 65.535 (Ω)	
PM const Ld (d-axis inductance)	H107	0.01 to 655.35 (mH)	
PM const Lq (q-axis inductance)	H108	0.01 to 655.35 (mH)	
PM const Ke (Induction voltage constant) (*3)	H109	0.1 to 6553.5 (mV/(rad/s))	
PM const J (Moment of inertia) (*4)	H110	0.001 to 9999.000 (kgm^2)	
PM motor constants tuned by auto-tuning			Automatically measured motor constants when the auto-tuning is executed, and they are set. After auto-tuning, you can be changed to the given value.
PM const R (Resistance, Auto)	H111	0.001 to 65.535 (Ω)	
PM const Ld (d-axis inductance, Auto)	H112	0.01 to 655.35 (mH)	
PM const Lq (q-axis inductance, Auto)	H113	0.01 to 655.35 (mH)	
PM const Ke (Induction voltage constant, Auto) (*3)	H114	0.1 to 6553.5 (mV/(rad/s))	

(*1) The base frequency (the maximum frequency) calculates to the following by the rated rotation (the maximum rotation) of the motor and the motor pole.

$$\text{Base frequency (Maximum frequency) [Hz]} = \frac{\text{Rated rotation (Maximum rotation) [min}^{-1}\text{]} \times \text{pole}}{120}$$

(*2) Please pay attention that settings of "H104" to "H110", "A003" and "A004" will be changed automatically, when PM motor capacity (H103) is changed.
(*3) PM induction voltage constant Ke is the peak voltage of one phase of per electrical angle speed (rad/s).
(*4) PM moment of inertia J is value (kgm^2) that is added the moment of inertia of the load machine that is converted to the motor shaft data and the moment of inertia of the motor.
(*5) Even if the auto-tuning has ended normally, you cannot operate the inverter with the tuning data immediately. If you intend to operate the inverter with the tuning data, be sure to switch the setting of PM motor code setting (H102) to "01" (Auto-Tuning).
(*6) If the auto-tuning has ended abnormally, you confirm the motor cable and the parameter setting, and retry it.
(*7) If the stop command is activated during auto-tuning (by pressing the STOP/RESET key or turning off the operation command), the constants set for auto-tuning may remain in the inverter. Before retrying the auto-tuning, initialize the inverter, and then readjust the settings for the auto-tuning.
(Perform the same procedure also when you proceed to the normal inverter operation.)

■Operating procedure (using the NES1-OP)

Step 1: Set the PM motor capacity, PM motor pole and PM motor rated current according to the motor.

H103 PM motor capacity
H104 PM motor pole
H105 PM motor rated current

Step 2: Set the base frequency, maximum frequency, and PM motor rated voltage according to the motor.

A003 Base frequency
A004 Maximum frequency
H101 PM motor rated voltage

Step 3: "02" is set to auto-tuning selection (H001).

H001 → 02
SET

Step 4: The operation command is input according to setting the run command source (A002).

RUN

Automatic driving begins.
(See the steps under this figure)

After completing auto-tuning, display of auto-tuning result.

---0 Normal end
---J Abnormal end

Step 5: After completing auto-tuning, to clear the result display, press the STOP key.

STOP

Step 6: Measured motor constants are reflected when "01" is set to PM motor code setting (H102).

H102 → 01
SET

When the operation command is input, the inverter performs an automatic operation in the following steps:

(1) Initial magnet position estimation (Motor does not rotate)
↓
(2) First DC excitation (Motor does not rotate)
↓
(3) First AC excitation (Motor does not rotate)
↓
(4) Second AC excitation (Motor does not rotate)
↓
(5) V/f running (rotation speed: about 40 % of the base frequency)(*1)
↓
(6) Display of auto-tuning result

(*1) When "01" is set to Auto-tuning selection (H001), this step is not performed and go to (6).

7.10.6 PM motor drive (b012,b083,H116 to H119,H121 to H123,H133 to H136,H141,H142)

This function estimates magnet position of PM motor by output voltage and current of inverter and setting motor constants, and drives PM motor.
Before using this function, be sure to make optimum constant settings for the motor with reference to subsection "7.10.4 Motor constants selection".

Item	Function code	Data or range of data	Description
Level of electronic thermal (*1)	b012	(0.20 to 1.00)×inverter rated current (A)	
Carrier frequency (*2)	b083	2.0 to 15.0 (kHz)	
PM speed response	H116	1. to 1000. (%)	
PM starting current	H117	20. to 100. (%)	Current value for starting (100 %=H105) (*3)(*4)
PM starting time	H118	0.01 to 60.00 (s)	Time of DC current passing for starting
PM stabilization constant	H119	0. to 120. (%)	(*5)
PM minimum frequency ratio	H121	0. to 50. (%)	Frequency of control mode switching (100 %=A003) (*6)
PM no-load current	H122	0. to 100. (%)	Current value for no-load (100 %=H105)
PM starting method selection	H123	00 (Normal)	
		01 (Initial magnet position estimation)	(*7)(*8)
PM initial magnet position estimation detect time	H133	0.03 to 2.50 (s)	The performing time of initial magnet position estimation.
PM initial magnet position estimation voltage gain	H134	0 to 120 (%)	The output voltage gain of initial magnet position estimation.
PM step-out protection selection	H135	00 (Disable)	
		01 (Error)	
		02 (Restart at 0 Hz)	
PM step-out protection level	H136	1 to 100 (%)	
PM overcurrent detection level	H141	(1.00 to 2.50)×inverter rated current (A)	
PM starting overcurrent detection level	H142	(1.00 to 2.50)×inverter rated current (A)	This level is applied at restarting the motor.

(*1) Please set the PM rated current (H105) to the level of electronic thermal (b012).
(*2) Please set the carrier frequency (b083) 8.0 kHz or higher.
(*3) Automatically reduces the carrier frequency at motor starting according to the PM starting current (H117).
(*4) When too great setting, motor may generate overload trip.
(*5) When too small setting, you may not be able to obtain motor torque, and motor generate impact or generate overcurrent trip near the frequency setting at "H121".
(*6) Set the frequency ratio switching between the synchronous operation mode at low speed and the sensorless vector control mode at high speed.
(*7) The allophone may generate during initial magnet position estimation, but this is not abnormal behavior.
(*8) When using initial magnet position estimation, please start with the motor has stopped. When starting with the motor has rotated, motor may rotate greatly or generate out-of-step.

When using PM motor drive function, observe the following precautions:
In combination with the motor other than Hitachi standard motor, performance of motor control cannot be guaranteed to be sufficient.
If you cannot obtain the desired characteristics from the motor driven under the sensorless vector control, readjust the motor constants according to the symptom, as described in the table below.

Operation status	Symptom	Adjustment method	Adjustment item
Starting	Trouble is caused when reverse running.	Enable the initial magnet position estimation function. - The motor may rotate slightly, but this is not abnormal behavior.	H123
	Motor generates out-of-step. Motor generates overcurrent trip.	Increase the PM starting current. - Note the electronic thermal protection function.	H117
		Increase the PM starting time.	H118
	Need for early starting.	Enable the initial magnet position estimation function, and reduce the PM starting time.	H118 H123
Less than "H121" setting	Motor runs unsteadily.	Increase the PM starting current. - Note the electronic thermal protection function.	H117
	Motor generates hunting.	Reduce the PM motor constant R step by step from the set value down to 0.7 times as high as the set value.	H106 H111
		Increase the PM motor constant Ld step by step from the set value up to 1.3 times as high as the set value. Increase the PM motor constant Lq step by step from the set value up to 1.3 times as high as the set value. - Please adjust to Ld ≤ Lq.	H107 H112 H108 H113
Near "H121" setting	Motor generates an impact. Motor generates overcurrent trip.	Adjust the PM speed response.	H116
		Adjust the PM minimum frequency ratio when a load changes.	H121
More than "H121" setting	Motor generates hunting.	Adjust the PM speed response.	H116
		Increase the PM no-load current.	H122
		Increase the carrier frequency if low setting.	b083
Initial magnet position estimating	Need for short time of Initial magnet position estimation.	Reduce the PM initial magnet position estimation detect time. - When too small setting, motor may rotate greatly or generate out-of-step.	H133
	Motor rotates greatly.	Increase the PM initial magnet position estimation detect time.	H133
		Increase the PM initial magnet position estimation voltage gain step by step. - When too great setting, motor may generate overcurrent trip.	H134
	Motor generates overcurrent trip.	Reduce the PM initial magnet position estimation voltage gain step by step. - When too small setting, motor may rotate greatly or generate out-of-step.	H134

Chapter 8 Communication Functions

This chapter describes the Communication functions. (Modbus-RTU)

8.1 Communication Specification ····· 8 - 3

8.2 Connecting the Inverter to Modbus ····· 8 - 4

8.3 Modbus setting procedure ····· 8 - 5

8.4 Modbus Communication parameter ····· 8 - 6

8.5 Modbus Protocol Reference ····· 8 - 6

8.6 Explanation of function codes ····· 8 - 10

8.7 Re-calculate the internal variable ····· 8 - 18

8.8 Modbus Data Listing ····· 8 - 19

(Memo)

8.1 Communication Specification

NE-S1 series inverters have built-in RS-485 serial communications, featuring the Modbus-RTU protocol. The inverters can connect directly to existing factory networks or work with new networked applications, without any extra interface equipment. The specifications are in the following table.

Item	Specifications	User-selectable
Transmission speed	4800 / 9600 / 19.2k / 38.4k bps	✓
Communication mode	Asynchronous	✕
Character code	Binary	✕
LSB placement	Transmits LSB first	✕
Electrical interface	RS-485 differential transceiver	✕
Data bits	8-bit (Modbus-RTU mode)	✕
Parity	None / even / odd	✓
Stop bits	1 or 2 bits	✓
Startup convention	One-way start from external control equipment	✕
Wait time for response	0 to 1000 msec.	✓
Connections	Station address numbers from 1 to 247	✓
Connector	RJ45 connector	–
Error check	Overrun, Framing block check code, CRC-16, or horizontal parity	–
Cable length	500 m maximum	

The network diagram below shows a series of inverters communicating with an external control equipment. Each inverter must have a unique address, from 1 to 247, on the network. In a typical application, an external control equipment like a host computer or controller is the master and each of the inverter(s) or other devices is a slave.

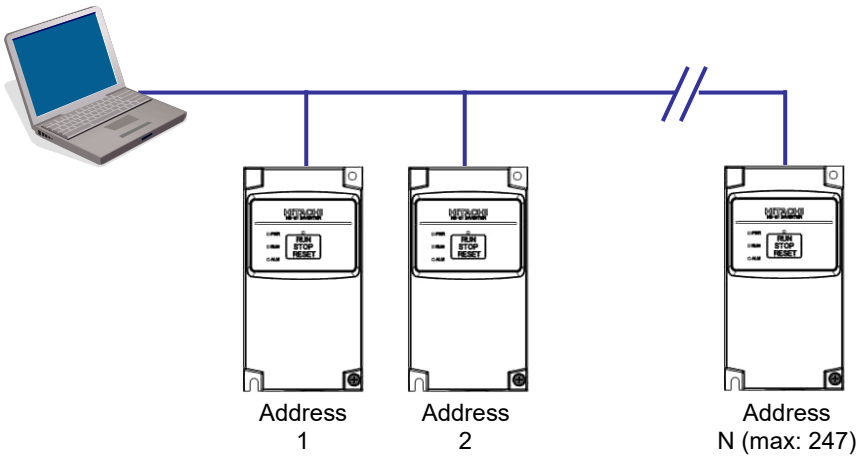

8.2 Connecting the Inverter to Modbus

The Modbus communication uses a pin of RJ45 as below.
The RJ45 connector is used for the external operator and Modbus communication.

Pin No:	Signal Symbol	Description
1	DC +5 V	For Operator. Do not connect.
2	—	For Operator. Do not connect.
3	—	For Operator. Do not connect.
4	**SG (GND)**	**Signal Ground**
5	**SP**	**Send Data Positive**
6	**SN**	**Send Data Negative**
7	(GND)	For Operator. Do not connect.
8	—	Not used. Do not connect.

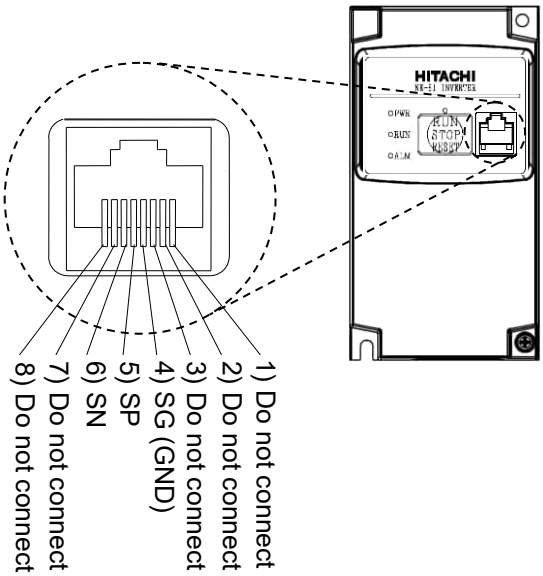

Please connect each inverter like the chart below in parallel.

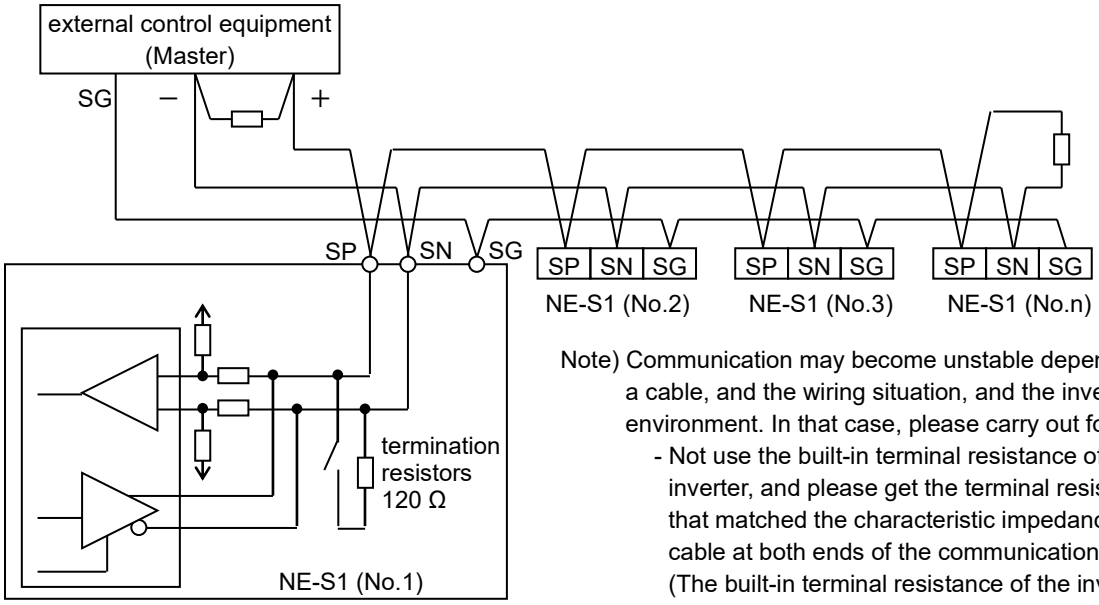

Note) Communication may become unstable depending on a cable, and the wiring situation, and the inverter environment. In that case, please carry out follows.
- Not use the built-in terminal resistance of the inverter, and please get the terminal resistance that matched the characteristic impedance of the cable at both ends of the communications cable. (The built-in terminal resistance of the inverter is 120 Ω.)
- Please connect a signal ground of each inverter to external control equipment (master).
- Please lower a transmission speed.
- Please insert a repeater.

8.3 Modbus setting procedure

1. Changes from an operator mode to Modbus

1) Set a parameter (refer to section "8.4 Modbus Communication parameter") for Modbus communication by the dedicated operator (NES1-OP), remote operator (OPE-S/SR/SBK/SRmini, WOP, SOP, SOP-VR), or ProDriveNext. (It is necessary to be set the operator side (OFF, right side (factory setting)) in RS485/OPE (RS422) changeover switch (SW5) when use the remote operator (OPE-S/SR/SBK/SRmini, SOP, SOP-VR, WOP) or ProDriveNext.
2) Power OFF the inverter and take off the connection cable for the remote operator or ProDriveNext.
3) Remove the front cover.
4) Change RS485/OPE (RS422) changeover switch (SW5) to RS485 side (ON, left side).
5) When terminal resistance is necessary, change termination resistor changeover switch (SW4) to effective (ON, right side).
6) Attach the front cover.
7) Connect the communications cable to bus line of Modbus.
8) Power ON the Inverter and start Modbus communication.

2. Changes from Modbus to an operator mode

1) Power OFF the inverter and take off a communications cable of Modbus.
2) Remove the front cover.
3) Change RS485/OPE (RS422) changeover switch (SW5) to operator side (OFF, right side).
4) Attach the front cover.
5) Connect the connection cable of the remote operator or ProDriveNext, etc.
6) Power ON the Inverter while pushing the RUN/STOP/RESET key on the standard panel. (Check the inverter is turned on, please keep pushing key about 5 seconds moreover.)
7) After the operator available, change setting the selection of OPE/Modbus (C070) to "00 (OPE)", and power OFF the inverter.
8) Power ON the Inverter again. The operator is available.

Note) The dedicated operator (NES1-OP) is available at the time of the Modbus communication use. In this case, do not perform 6) above, set the communication selection (C070) from "01 (Modbus)" to "00 (OPE)" on NES1-OP, and then turn on the power again.

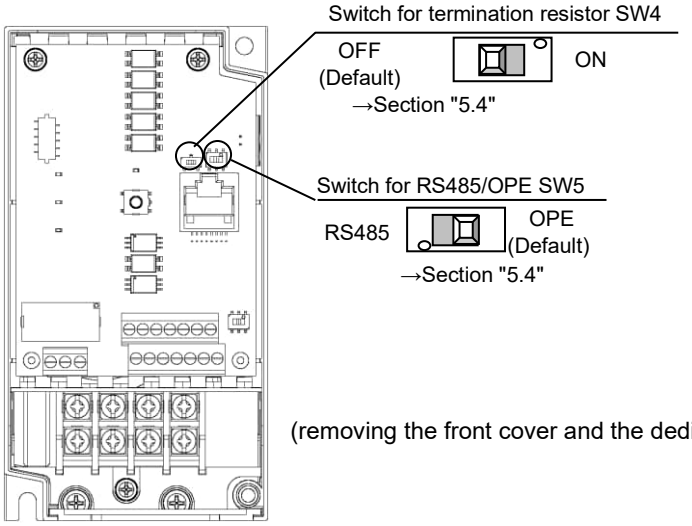

(removing the front cover and the dedicated operator (NES1-OP))

(Note) After installing the dedicated operator (NES1-OP), the switch for termination resistor SW4 and switch for RS485/OPE SW5 cannot be changed. Therefore, switch the SW before installing the dedicated operator (NES1-OP). When changing these switches (SW4,5) after installing the dedicated operator (NES1-OP), remove the dedicated operator (NES1-OP) before setting. When reattaching the dedicated operator (NES1-OP), be careful not to damage the fixing claws (see the appendix at the end of this guide).

8.4 Modbus Communication parameter

Inverter Parameter Setup
The following parameters must be set properly to allow communications. Set the following parameters according to the communication specifications.
The data of "C070", "C071", "C074", "C075" will not be reflected unless the power is turned on again. (It is not reflected in the reset input.)

Function Code	Name	Required	Settings
A001 A201	Frequency source	✓	00…VR (volume of NES1-OP, OPE-SR/SRmini) 01…Control terminal 02…Operator **03…Modbus network input** 10…Calculate function output
A002 A202	Run command source	✓	01…Control terminal 02…Run key on standard panel, or remote operator **03…Modbus network input**
C070	Selection of OPE/Modbus	✓	00… Operator **01…Modbus-RTU**
C071	Communication speed	✓	04…4800 bps 05…9600 bps 06…19.2k bps 07…38.4k bps
C072	Modbus Address	✓	Network address, range is 1 to 247.
C074	Communication parity	✓	00…No parity 01…Even parity 02…Odd parity
C075	Communication stop bit	✓	01…1 bit 02…2 bit
C076	Communication error selection	–	00…Trip (Error code E41) 01…Trip after deceleration stop 02…Ignore 03…Free-run stop 04…Deceleration stop
C077	Communication error detection time	–	Set the communications watchdog timer period. Range: 0.00 to 99.99 sec.
C078	Communication wait time	✓	Set the inverter wait time from receiving a message to transmitting a message. Range: 0. to 1000. ms

8.5 Modbus Protocol Reference

Transmission procedure

The transmission between the external control equipment and the inverter takes the procedure below.

- Query - A frame sent from the external control equipment to the inverter
- Response - A frame returned from inverter to the external control equipment
- If "C077" is set to other than "0.00", the communication will time out if the inverter does not complete the reception of the next query within the time set in "C077" after replying to the response. Subsequent operation depends on the setting of "C076". The inverter does not return a response.

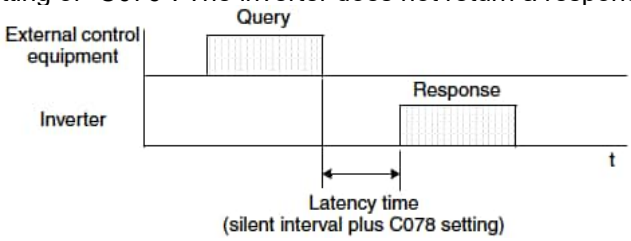

The inverter returns the response only after the inverter receives a query from the external control equipment and does not output the response positively. The silent interval is 14 bits.

Each frame is formatted (with commands) as follows:

Message Configuration: Query

The command message sent from the master to the slave is called "Query", and the response message from the slave is called "Response". The transmission formats for queries and responses are shown below.

Query

Frame Format
Header (silent interval)
Slave address
Function code
Query data
Error check (CRC-16)
Trailer (silent interval)

Response

Frame Format
Header (silent interval)
Slave address
Function code
Response data
Error check (CRC-16)
Trailer (silent interval)

Slave address:

- This is a number of 1 to 247 assigned to each inverter (slave). (Only the inverter having the address given as a slave address in the query can receive the query.)
- When slave address "0" is specified, the query can be addressed to all inverters simultaneously. (Broadcasting)
- In broadcasting, master cannot read and loop back data.

Function code:

Specify a function external control equipment want to make the inverter execute. Function codes available to the NE-S1 series are listed below.

Function Code	Function	Maximum data size (bytes available per message)	Maximum number of data elements available per message
0 1 h	Read Coils Status	4	32 coils (in bits)
0 3 h	Read Holding Registers	32	16 registers (in bytes)
0 5 h	Write in Coil	2	1 coil (in bits)
0 6 h	Write in Holding Register	2	1 register (in bytes)
0 8 h	Loopback Test	–	–
0 F h	Write in Coils	4	32 coils (in bits)
1 0 h	Write in Holding Registers	32	16 registers (in bytes)
1 7 h	Read/Write in Holding Registers	32 / 32	16/16 registers (in bytes)

Data:

- The data is related to the function code.
- The data transmission format depends on the function code.
- The data format used in the NE-S1 series is corresponding to the Modbus data format below.

Name of Data	Description
Coil	Binary data that can be referenced and changed (1 bit long)
Holding Register	16-bit data that can be referenced and changed

- The negative data use 2 complements.

Error check:

Modbus-RTU uses CRC (Cyclic Redundancy Check) for error checking.

- The CRC code is 16-bit data that is generated for 8-bit blocks of arbitrary length.
- The CRC code is generated by a generator polynomial CRC-16 ($X^{16}+ X^{15}+ X^{2}+ 1$).

Header and trailer (silent interval):

Latency is the time between the reception of a query from the external control equipment and transmission of a response from the inverter.

- 3.5 characters (14 bits) are always required for latency time. If the latency time shorter than 3.5 characters, the inverter returns no response.
- The actual transmission latency time is the sum of silent interval (3.5 characters long) + "C078" (communication wait time).

Message Configuration: Response

Transmission time required:

- A time period between reception of a query from the external control equipment and transmission of a response from the inverter is the sum of the silent interval (3.5 characters long) + "C078" (communication wait time).
- The external control equipment must provide a time period of the silent interval (3.5 characters long or longer) before sending another query to an inverter after receiving a response from the inverter.

Normal response:

- When receiving a query that contains a function code of Loopback (08h), the inverter returns a response of the same content of the query.
- When receiving a query that contains a function code of Write in Register or Coil (05h, 06h, 0Fh, or 10h), the inverter directly returns the query as a response.
- When receiving a query that contains a function code of Read Register or Coil (01h or 03h), the inverter returns, as a response, the read data together with the same slave address and function code as those of the query.

Response when an error occurs:

- When finding any error in a query (except for a transmission error), the inverter returns an exception response without executing anything.
- You can check the error by the function code in the response. The function code of the exception response is the sum of the function code of the query and "80h".
- The content of the error is known from the exception code.

Field Configuration
Slave address
Function code
Exception code
CRC-16

Exception Code	Description
0 1 h	The specified function is not supported.
0 2 h	The specified slave address is not found.
0 3 h	The format of the specified data is not acceptable.
2 1 h	The data to be written in a holding register is outside the setting range of the register.
2 2 h	The specified functions are not available to the inverter. • Function to change the content of a register that cannot be changed while the inverter is in service. • Function to submit an ENTER command during running. • Function to submit an ENTER command during undervoltage. • Function to write in a register during tripping. • Function to change the I/O terminal configuration which is not allowed. • Function to change active state of RS (reset) terminal. • Function to write in a register locked by softlock.
2 3 h	The register (or coil) to be written in is read-only.

No response occurs:

In the cases below, the inverter ignores a query and returns no response.

- When receiving a broadcasting query.
- When detecting a transmission error in reception of a query.
- When the slave address set in the query is not equal to the slave address of the inverter.
- When a time interval between data elements constituting a message is shorter than 3.5 characters.
- When the data length of the query is invalid.
- When the reception space is more than 1.5 characters (6 bits) in the frame.
- When an error check code of query is incongruous. (CRC error)

Note) Provide a timer in the external control equipment and make the external control equipment retransmit the same query when no response is made within a preset time period after the preceding query was sent.

8.6 Explanation of function codes

(A) Read Coils Status [01h]

This function reads the status (ON/OFF) of selected coils. An example follows below.

- Read intelligent input terminals [1] to [5] of an inverter having a slave address "8".
- This example assumes the intelligent input terminals have terminal states listed below.

Item	Data				
Intelligent input terminal	[1]	[2]	[3]	[4]	[5]
Coil number	0007h	0008h	0009h	000Ah	000Bh
Coil Status	ON	OFF	ON	OFF	OFF

Query:

No.	Field Name	Example (Hex)
1	Slave address *1	08
2	Function code	01
3	Coils start address *4 (high order)	00
4	Coils start address *4 (low order)	06
5	Number of coils (high order *2)	00
6	Number of coils (low order *2)	05
7	CRC-16 (high order)	1C
8	CRC-16 (low order)	91

Response:

No.	Field Name	Example (Hex)
1	Slave address	08
2	Function code	01
3	Data size (in bytes)	01
4	Coil data *3	05
5	CRC-16 (high order)	92
6	CRC-16 (low order)	17

***1:** Broadcasting is disabled.
***2:** If the number of coils is specified as "0" or as "31" or more, the error code "03h" is returned.
***3:** Data is transferred by the specified number of data bytes (data size).
***4:** The coils are addressed starting at zero. Therefore, the coils numbered 1-86 are addressed as 0-85. Coil address value (transmitted on Modbus line) is 1 less than the coil number.

- The data set in the response shows terminal state of coils "0007h" to "000Bh".
- Data "05h=00000101b" indicates the following assuming number "0007h" coil is the LSB.

Item	Data							
Coil Number	-	-	-	000Bh	000Ah	0009h	0008h	0007h
Coil Status	OFF	OFF	OFF	OFF	OFF	ON	OFF	ON

- When a read coil is outside the range of the defined coils, the coil data to be transmitted contains "0" as the status of the coil outside the range.
- When the Read Coils Status command cannot be executed normally, see "(I) Exception Response" below.

(B) Read Holding Registers [03h]

This function reads the contents of the specified number of consecutive holding registers (of specified register addresses). An example follows below.

- Reading factor, status, frequency, output current and DC bus voltage of trip monitor 1 from an inverter having a slave address "1".
- This example assumes the previous five items in the latest trip are as follows:

Item	d081 (factor)	d081 (status)	d081 (frequency)	d081 (output current)	d081 (DC bus voltage)
Register Number	0012h	0013h	0014h, 0015h	0016h	0017h
Trip factor	Overcurrent (E03)	04h	0.99 Hz	3.0 A	284 VDC

Query:

No.	Field Name	Example (Hex)
1	Slave address *1	01
2	Function code	03
3	Register start address *3 (high order)	00
4	Register start address *3 (low order)	11
5	Number of holding registers (high order)	00
6	Number of holding registers (low order)	06
7	CRC-16 (high order)	95
8	CRC-16 (low order)	CD

Response:

No.	Field Name	Example (Hex)
1	Slave address	01
2	Function code	03
3	Data size (in bytes) *2	0C
4	Register data 1 (high order)	00
5	Register data 1 (low order)	03
6	Register data 2 (high order)	00
7	Register data 2 (low order)	04
8	Register data 3 (high order)	00
9	Register data 3 (low order)	00
10	Register data 4 (high order)	00
11	Register data 4 (low order)	63
12	Register data 5 (high order)	00
13	Register data 5 (low order)	1E
14	Register data 6 (high order)	01
15	Register data 6 (low order)	1C
16	CRC-16 (high order)	0A
17	CRC-16 (low order)	A3

***1:** Broadcasting is disabled.

***2:** Data is transferred by the specified number of data bytes (data size). In this case, 12 bytes are used to return the content of six holding registers.

***3:** The registers are addressed starting at zero. Therefore, register numbered "0012h" is addressed as "0011h". Register address value (transmitted on Modbus line) is 1 less than the register number.

The data set in the response is as follows:

Response Buffer	4-5		6-7		8-9	
Register Number	0012h (high order)	0012h (low order)	0013h (high order)	0013h (low order)	0014h (high order)	0014h (low order)
Register Data	0003h		0004h		0000h	
Trip data	Trip factor (E03)		Status (acceleration)		Frequency (0.99 Hz)	
Response Buffer	**10-11**		**12-13**		**14-15**	
Register Number	0015h (high order)	0015h (low order)	0016h (high order)	0016h (low order)	0017h (high order)	0017h (low order)
Register Data	0063h		001Eh		011Ch	
Trip data	Frequency (0.99 Hz)		Output current (3.0 A)		DC bus voltage (284 VDC)	

When the Read Holding Registers command cannot be executed normally, see "(I) Exception Response" below.

(C) Write in Coil [05h]

This function writes data in a single coil. Coil status changes are as follows:

Data	Coil Status	
	OFF to ON	ON to OFF
Change data (high order)	FFh	00h
Change data (low order)	00h	00h

An example follows (note that to command the inverter via Modbus, set "A002/A202=03"):

- Sending a RUN command to an inverter having slave address "8".
- This example writes in coil number "1".

Query:

No.	Field Name	Example (Hex)
1	Slave address *1	08
2	Function code	05
3	Coil start address *2 (high order)	00
4	Coil start address *2 (low order)	00
5	Change data (high order)	FF
6	Change data (low order)	00
7	CRC-16 (high order)	8C
8	CRC-16 (low order)	A3

Response:

No.	Field Name	Example (Hex)
1	Slave address	08
2	Function code	05
3	Coil start address *2 (high order)	00
4	Coil start address *2 (low order)	00
5	Change data (high order)	FF
6	Change data (low order)	00
7	CRC-16 (high order)	8C
8	CRC-16 (low order)	A3

***1:** No response is made for a broadcasting query.
***2:** The coils are addressed starting at zero. Therefore, coils numbered 1-86 are addressed as 0-85. Coil address value (transmitted on Modbus line) is 1 less than the coil number.

When writing in a selected coil fails, see "(I) Exception Response" below.

(D) Write in Holding Register [06h]

This function writes data in a specified holding register. An example follows:

- Write "5.00 Hz" as the multi-speed frequency 0 (A020) in an inverter having slave address "5".
- This example uses change data "500 (1F4h)" to set "5.00 Hz" as the data resolution of the register "1217h" holding the multi-speed frequency 0 (A020) is 0.01 Hz.

Query:

No.	Field Name	Example (Hex)
1	Slave address *1	05
2	Function code	06
3	Register start address *2 (high order)	12
4	Register start address *2 (low order)	16
5	Change data (high order)	01
6	Change data (low order)	F4
7	CRC-16 (high order)	6C
8	CRC-16 (low order)	E5

Response:

No.	Field Name	Example (Hex)
1	Slave address	05
2	Function code	06
3	Register start address *2 (high order)	12
4	Register start address *2 (low order)	16
5	Change data (high order)	01
6	Change data (low order)	F4
7	CRC-16 (high order)	6C
8	CRC-16 (low order)	E5

***1:** No response is made for a broadcasting query.
***2:** The registers are addressed starting at zero. Therefore, register numbered "1217h" is addressed as "1216h". Register address value (transmitted on Modbus line) is 1 less than the register number.

When writing in a selected holding register fails, see "(I) Exception Response" below.

(E) Loopback Test [08h]

This function checks a master-slave transmission using any test data. An example follows:

- Send test data to an inverter having slave address "1" and receiving the test data from the inverter (as a loopback test).

Query:

No.	Field Name	Example (Hex)
1	Slave address *1	01
2	Function code	08
3	Test subcode (high order)	00
4	Test subcode (low order)	00
5	Data (high order)	Any
6	Data (low order)	Any
7	CRC-16 (high order)	CRC
8	CRC-16 (low order)	CRC

Response:

No.	Field Name	Example (Hex)
1	Slave address *1	01
2	Function code	08
3	Test subcode (high order)	00
4	Test subcode (low order)	00
5	Data (high order)	Any
6	Data (low order)	Any
7	CRC-16 (high order)	CRC
8	CRC-16 (low order)	CRC

***1:** Broadcasting is disabled.

The test subcode is for echo (00h, 00h) only and not available to the other commands.

(F) Write in Coils [0Fh]

This function writes data in consecutive coils. An example follows:

- Change the state of intelligent input terminal [1] to [5] of an inverter having a slave address "8".
- This example assumes the intelligent input terminals have terminal states listed below.

Item	Data				
Intelligent input terminal	[1]	[2]	[3]	[4]	[5]
Coil Number	0007h	0008h	0009h	000Ah	000Bh
Terminal status	ON	ON	ON	OFF	ON

Query:

No.	Field Name	Example (Hex)
1	Slave address *1	08
2	Function code	0F
3	Coils start address *3 (high order)	00
4	Coils start address *3 (low order)	06
5	Number of coils (high order)	00
6	Number of coils (low order)	05
7	Byte number *2	02
8	Change data (high order)	17
9	Change data (low order)	00
10	CRC-16 (high order)	83
11	CRC-16 (low order)	EA

Response:

No.	Field Name	Example (Hex)
1	Slave address	08
2	Function code	0F
3	Coils start address *3 (high order)	00
4	Coils start address *3 (low order)	06
5	Number of coils (high order)	00
6	Number of coils (low order)	05
7	CRC-16 (high order)	75
8	CRC-16 (low order)	50

***1:** Broadcasting is disabled.
***2:** The change data is a set of high order data and low order data. So, when the data size (in bytes) to be changed is an odd number, add "1" to the data size (in bytes) to make it an even number.
***3:** The Coils are addressed starting at zero. Therefore, coils numbered 1-86 are addressed as 0-85. Coil address value (transmitted on Modbus line) is 1 less than the coil number.
***4:** Intelligent input terminal status (d005) cannot monitor the terminal information by communication.

When writing in a selected holding coils fails, see "(I) Exception Response" below.

(G) Write in Holding Registers [10h]

This function writes data in consecutive holding registers. An example follows:

- Write "3000 seconds" as the acceleration time (1) (F002) in an inverter having a slave address "8".
- This example uses change data "300000 (493E0h)" to set "3000 seconds" as the data resolution of the registers "1103h" and "1104h" holding the acceleration time (1) (F002) is 0.01 second.

Query:

No.	Field Name	Example (Hex)
1	Slave address *1	08
2	Function code	10
3	Start address *3 (high order)	11
4	Start address *3 (low order)	02
5	Number of holding registers (high order)	00
6	Number of holding registers (low order)	02
7	Byte number *2	04
8	Change data 1 (high order)	00
9	Change data 1 (low order)	04
10	Change data 2 (high order)	93
11	Change data 2 (low order)	E0
12	CRC-16 (high order)	B0
13	CRC-16 (low order)	03

Response:

No.	Field Name	Example (Hex)
1	Slave address	08
2	Function code	10
3	Start address *3 (high order)	11
4	Start address *3 (low order)	02
5	Number of holding registers (high order)	00
6	Number of holding registers (low order)	02
7	CRC-16 (high order)	E5
8	CRC-16 (low order)	AD

***1:** Broadcasting is disabled.
***2:** This is not the number of holding registers. Specify the number of bytes of data to be changed.
***3:** The registers are addressed starting at zero. Therefore, register numbered "1103h" is addressed as "1102h". Register address value (transmitted on Modbus line) is 1 less than the register number.

When writing in selected holding registers fails, see "(I) Exception Response" below.

(H) Read/Write in Holding Registers [17h]

This function is to read and write data in consecutive holding registers. An example follows:

- Write "50.00 Hz" as the output frequency setting (F001) in an inverter having a slave address "1" and then to read out the output frequency monitoring (d001).

Query:

No.	Field Name	Example (Hex)
1	Slave address	01
2	Function code	17
3	Start address to read *1 (high order)	10
4	Start address to read *1 (low order)	00
5	Number of holding registers to read (high order)	00
6	Number of holding registers to read (low order)	02
7	Start address to write *1 (high order)	00
8	Start address to write *1 (low order)	00
9	Number of holding registers to write (high order)	00
10	Number of holding registers to write (low order)	02
11	Byte number to write *2	04
12	Change data 1 (high order)	00
13	Change data 1 (low order)	00
14	Change data 2 (high order)	13
15	Change data 2 (low order)	88
16	CRC-16 (high order)	F4
17	CRC-16 (low order)	86

Response:

No.	Field Name	Example (Hex)
1	Slave address	01
2	Function code	17
3	Byte number n	04
4	Register Data 1 (high order)	00
5	Register Data 1 (low order)	00
6	Register Data 2 (high order)	13
7	Register Data 2 (low order)	88
8	CRC-16 (high order)	F4
9	CRC-16 (low order)	71

***1:** Register address value (transmitted on Modbus line) is 1 less than the register number.

When writing in selected holding registers fails, see "(I) Exception Response" below.

(I) Exception Response

When sending a query (excluding a broadcasting query) to an inverter, the external control equipment always requests a response from the inverter. Usually, the inverter returns a response according to the query. However, when finding an error in the query, the inverter returns an exception response. The exception response consists of the fields shown below.

Field Configuration
Slave address
Function code
Exception code
CRC-16

The content of each field is explained below. The function code of the exception response is the sum of the function code of the query and "80h". The exception code indicates the factor of the exception response.

Function Code	
Query	Exception Response
0 1 h	8 1 h
0 3 h	8 3 h
0 5 h	8 5 h
0 6 h	8 6 h
0 F h	8 F h
1 0 h	9 0 h
1 7 h	9 7 h

Exception Code	
Code	Description
0 1 h	The specified function is not supported.
0 2 h	The specified slave address is not found.
0 3 h	The format of the specified data is not acceptable.
2 1 h	The data to be written in a holding register is outside the setting range of the register.
2 2 h	The specified functions are not available to the inverter. • Function to change the content of a register that cannot be changed while the inverter is in service. • Function to submit an ENTER command during running. • Function to submit an ENTER command during undervoltage. • Function to write in a register during tripping. • Function to change the I/O terminal configuration which is not allowed. • Function to change active state of [RS] (reset) terminal. • Function to write in a register locked by softlock.
2 3 h	The register (or coil) to be written in is read-only.

8.7 Re-calculate the internal variable

There is a necessity of the data recalculation depending on the parameter. In this case, use the ENTER command.

(A) ENTER command

To recalculate the internal value, set "0000h" to the register "0900h" by the Write in Holding Register command [06h].

Value	Description
0000h	Recalculate the internal value.

List of parameters needing the recalculation of the internal variable.

Code	Function name	Code	Function name
A003/A203	Base frequency	H004/H204	Motor poles setting
A004/A204	Maximum frequency	H101	PM motor rated voltage
A044/A244	V/f characteristic curve	H102	PM motor code setting
A082/A282	AVR voltage selection	H103	PM motor capacity
b112	Free V/f setting, frequency 7	H104	PM motor pole setting
H003/H203	Motor capacity	H105	PM rated current

Note) The NE-S1 series inverter does not have a data store command/register because the data of all parameters store at the time of power supply OFF. Therefore, it is necessary to put back data before power supply OFF when need to use the data before the change in next power supply injection.

8.8 Modbus Data Listing

(A) Modbus Coil List

The following tables list the primary coils for the inverter interface to the network. The table legend is given below.

- **Coil No. -** The network register address offset for the coil. The coil data is a single bit (binary) value.
- **Item -** The functional name of the coil.
- **R/W -** The read-only (R) or read-write (R/W) access permitted to the inverter data.
- **Setting -** The meaning of each of the states of the coils.

Coil No.	Item	R/W	Setting
0000h	(Reserved)	-	(Inaccessible)
0001h	Operation command	R/W	1: Run, 0: Stop (valid when A002/A202=03)
0002h	Rotation direction command	R/W	1: Reverse rotation, 0: Forward rotation (valid when A002/A202=03)
0003h	External trip (EXT)	R/W	1: Trip
0004h	Trip reset (RS)	R/W	1: Reset (*2)
0005h	(Reserved)	-	(Inaccessible)
0006h	(Reserved)	-	(Inaccessible)
0007h	Intelligent input terminal [1]	R/W	1: ON, 0: OFF (*1)
0008h	Intelligent input terminal [2]	R/W	1: ON, 0: OFF (*1)
0009h	Intelligent input terminal [3]	R/W	1: ON, 0: OFF (*1)
000Ah	Intelligent input terminal [4]	R/W	1: ON, 0: OFF (*1)
000Bh	Intelligent input terminal [5]	R/W	1: ON, 0: OFF (*1)
000Ch to 000Eh	(Reserved)	-	(Inaccessible)
000Fh	Operation status	R	1: Run, 0: Stop (interlocked to d003)
0010h	Rotation direction	R	1: Reverse rotation, 0: Forward rotation (interlocked to d003)
0011h	Inverter ready (IRDY)	R	1: Ready, 0: Not ready (Same as Coil No. 0045h)
0012h	(Reserved)	-	(Inaccessible)
0013h	RUN (running)	R	1: ON, 0: OFF
0014h	FA1 (constant speed reached)	R	1: ON, 0: OFF
0015h	FA2 (set frequency overreached)	R	1: ON, 0: OFF
0016h	OL (overload advance notice)	R	1: ON, 0: OFF
0017h	OD (output deviation for PID control)	R	1: ON, 0: OFF
0018h	AL (alarm signal)	R	1: ON, 0: OFF
0019h	FA3 (set frequency reached)	R	1: ON, 0: OFF
001Ah	(Reserved)	-	(Inaccessible)
001Bh	(Reserved)	-	(Inaccessible)
001Ch	UV (undervoltage)	R	1: ON, 0: OFF
001Dh	(Reserved)	-	(Inaccessible)
001Eh	RNT (operation time over)	R	1: ON, 0: OFF
001Fh	ONT (power-on time over)	R	1: ON, 0: OFF
0020h	THM (thermal alarm signal)	R	1: ON, 0: OFF
0021h to 0027h	(Reserved)	-	(Inaccessible)
0028h	ZS (0 Hz detection signal)	R	1: ON, 0: OFF
0029h to 002Dh	(Reserved)	-	(Inaccessible)

Coil No.	Item	R/W	Setting
002Eh	Dc (analog input disconnection detection)	-	1: ON, 0: OFF
002Fh to 0031h	(Reserved)	-	(Inaccessible)
0032h	FBV (PID feedback comparison)	R	1: ON, 0: OFF
0033h	(Reserved)	-	(Inaccessible)
0034h	LOG (logical operation result)	R	1: ON, 0: OFF
0035h to 003Bh	(Reserved)	-	(Inaccessible)
003Ch	FR (starting contact signal)	R	1: ON, 0: OFF
003Dh	OHF (heatsink overheat warning)	R	1: ON, 0: OFF
003Eh	LOC (low-current indication signal)	R	1: ON, 0: OFF
003Fh to 0044h	(Reserved)	-	(Inaccessible)
0045h	IRDY (inverter ready)	R	1: ON, 0: OFF (Same as Coil No.0011h)
0046h	FWR (forward rotation)	R	1: ON, 0: OFF
0047h	RVR (reverse rotation)	R	1: ON, 0: OFF
0048h	MJA (major failure)	R	1: ON, 0: OFF
0049h	(Reserved)	-	(Inaccessible)
004Ah	CRC error	R	1: Error detected, 0: No error (*3)
004Bh	Overrun error	R	1: Error detected, 0: No error (*3)
004Ch	Framing error	R	1: Error detected, 0: No error (*3)
004Dh	Parity error	R	1: Error detected, 0: No error (*3)
004Eh	(Reserved)	-	(Inaccessible)
004Fh	(Reserved)	-	(Inaccessible)
0050h	WC (window comparator)	R	1: ON, 0: OFF
0051h to 0053h	(Reserved)	-	(Inaccessible)
0054h	FREF (frequency command source signal)	R	1: Operator, 0: Others
0055h	REF (RUN command source signal)	R	1: Operator, 0: Others
0056h	SETM (2nd motor selected)	R	1: 2nd motor selected, 0: 1st motor selected
0057h-	(Reserved)	-	(Inaccessible)

*1 The input terminal function can do ON/OFF by Modbus communication. If either the coil of the input terminal or the signal of the control circuit is ON, the inverter recognizes it to be ON. But ON by the communication does not display on the intelligent input terminal status (d005), because "d005" is a monitor for the signal of the control circuit only.

*2 The writable coil is cleared "0 (OFF)" by the reset input. When you do not want to clear, please set the reset selection (C102) to "02 (cancel trip state, no effect if in run mode)".

3 Communication error data is retained until an error reset command is input. (In the case of "C102 = 02", error is cleared at the time of a trip only.)
*reset command: terminal reset function, reset of coil (coil No. "0004h")

(B) Modbus Holding Registers

The following tables list the holding registers for the inverter interface to the network. The table legend is given below.

- **Register No. -** The network register address offset for the value. Some values have a high and low address.
- **Function name -** The standard functional name of the parameter or function for the inverter.
- **Function code -** The inverter's reference code for the parameter or function (same as the operator display).
- **R/W -** The read-only (R) or write-only (W) or read-write access (R/W) permitted to the data in the inverter.
- **Monitoring and setting items -** How the parameter or setting works (same as Chapter 7 description).
- **Data resolution -** This is the quantity represented by the LSB of the network value, in engineering units. When the network data range is greater than the inverter's internal data range, this 1-bit resolution will be fractional.

Note) The network values are binary integers. Since these values cannot have an embedded decimal point, for many parameters it represents the actual value (in engineering units) multiplied by a factor of 10 or 100. Network communications must use the listed range for network data. The inverter automatically divides received values by the appropriate factor in order to establish the decimal point for internal use. Likewise, the network host external control equipment must apply the same factor when it needs to work in engineering units. However, when sending data to the inverter, the network host external control equipment must scale values to the integer range listed for network communications.

(1) Registers (frequency, status, trip monitor)

Register No.	Function name	Function code	R/W	Monitoring and setting items	Data resolution
0000h	(Reserved)	-	-	(Inaccessible)	
0001h	Frequency source	F001 (high)	R/W	0 to "maximum frequency (A004/A204)" (valid when A001/A201=03.)	0.01 [Hz]
0002h		F001 (low)	R/W		
0003h	Inverter status A	-	R	0: Initial status 2: Stopping 3: Running 4: Free-run stop 5: Jogging 6: DC braking 7: Retrying 8: Tripping 9: Undervoltage (UV)	-
0004h	Inverter status B	-	R	0: Stopping, 1: Running, 2: Tripping	-
0005h	Inverter status C	-	R	0: --- 1: Stopping 2: Decelerating 3: Constant-speed operation 4: Accelerating 5: Forward rotation 6: Reverse rotation 7: Switching from forward to reverse rotation 8: Switching from reverse to forward rotation 9: Starting forward 10: Starting reverse	-
0006h	PID feedback	-	R	0 to 10000 (R/W is valid when A076=02.)	0.01 [%]
0007h to 0010h	(Reserved)	-	-	(Inaccessible)	-
0011h	Trip Counter	d080	R	0 to 65535	1 [time]
0012h	Trip info. 1 (factor)	d081	R	See the "(i) List of inverter trip factors" below.	-
0013h	Trip info. 1 (inverter status)			See the "(i) List of inverter trip factors" below.	-
0014h	Trip info. 1 (frequency) (high)			Output frequency at tripping.	0.01 [Hz]
0015h	Trip info. 1 (frequency) (low)				
0016h	Trip info. 1 (current)			Output current at tripping.	0.01 [A]
0017h	Trip info. 1 (voltage)			DC bus voltage at tripping.	0.1 [VDC]
0018h	Trip info. 1 (running time) (high)			Cumulative operation RUN time at tripping.	1 [hr]
0019h	Trip info. 1 (running time) (low)				
001Ah	Trip info. 1 (power-on time) (high)			Cumulative power-on time at tripping.	1 [hr]
001Bh	Trip info. 1 (power-on time) (low)				

Register No.	Function name	Function code	R/W	Monitoring and setting items	Data resolution
001Ch	Trip info. 2 (factor)	d082	R	See the “(i) List of inverter trip factors” below.	-
001Dh	Trip info. 2 (inverter status)			See the “(i) List of inverter trip factors” below.	-
001Eh	Trip info. 2 (frequency) (high)			Output frequency at tripping.	0.01 [Hz]
001Fh	Trip info. 2 (frequency) (low)				
0020h	Trip info. 2 (current)			Output current at tripping.	0.01 [A]
0021h	Trip info. 2 (voltage)			DC bus voltage at tripping.	0.1 [VDC]
0022h	Trip info. 2 (running time) (high)			Cumulative operation RUN time at tripping.	1 [hr]
0023h	Trip info. 2 (running time) (low)				
0024h	Trip info. 2 (power-on time) (high)			Cumulative power-on time at tripping.	1 [hr]
0025h	Trip info. 2 (power-on time) (low)				
0026h	Trip info. 3 (factor)	d083	R	See the “(i) List of inverter trip factors” below.	-
0027h	Trip info. 3 (inverter status)			See the “(i) List of inverter trip factors” below.	-
0028h	Trip info. 3 (frequency) (high)			Output frequency at tripping.	0.01 [Hz]
0029h	Trip info. 3 (frequency) (low)				
002Ah	Trip info. 3 (current)			Output current at tripping.	0.01 [A]
002Bh	Trip info. 3 (voltage)			DC bus voltage at tripping.	0.1 [VDC]
002Ch	Trip info. 3 (running time) (high)			Cumulative operation RUN time at tripping.	1 [hr]
002Dh	Trip info. 3 (running time) (low)				
002Eh	Trip info. 3 (power-on time) (high)			Cumulative power-on time at tripping.	1 [hr]
002Fh	Trip info. 3 (power-on time) (low)				
0030h	Trip info. 4 (factor)	d084	R	See the “(i) List of inverter trip factors” below.	-
0031h	Trip info. 4 (inverter status)			See the “(i) List of inverter trip factors” below.	-
0032h	Trip info. 4 (frequency) (high)			Output frequency at tripping.	0.01 [Hz]
0033h	Trip info. 4 (frequency) (low)				
0034h	Trip info. 4 (current)			Output current at tripping.	0.01 [A]
0035h	Trip info. 4 (voltage)			DC bus voltage at tripping.	0.1 [VDC]
0036h	Trip info. 4 (running time) (high)			Cumulative operation RUN time at tripping.	1 [hr]
0037h	Trip info. 4 (running time) (low)				
0038h	Trip info. 4 (power-on time) (high)			Cumulative power-on time at tripping.	1 [hr]
0039h	Trip info. 4 (power-on time) (low)				
003Ah	Trip info. 5 (factor)	d085	R	See the “(i) List of inverter trip factors” below.	-
003Bh	Trip info. 5 (inverter status)			See the “(i) List of inverter trip factors” below.	-
003Ch	Trip info. 5 (frequency) (high)			Output frequency at tripping.	0.01 [Hz]
003Dh	Trip info. 5 (frequency) (low)				
003Eh	Trip info. 5 (current)			Output current at tripping.	0.01 [A]
003Fh	Trip info. 5 (voltage)			DC bus voltage at tripping.	0.1 [VDC]
0040h	Trip info. 5 (running time) (high)			Cumulative operation RUN time at tripping.	1 [hr]
0041h	Trip info. 5 (running time) (low)				
0042h	Trip info. 5 (power-on time) (high)			Cumulative power-on time at tripping.	1 [hr]
0043h	Trip info. 5 (power-on time) (low)				
0044h	Trip info. 6 (factor)	d086	R	See the “(i) List of inverter trip factors” below.	-
0045h	Trip info. 6 (inverter status)			See the “(i) List of inverter trip factors” below.	-
0046h	Trip info. 6 (frequency) (high)			Output frequency at tripping.	0.01 [Hz]
0047h	Trip info. 6 (frequency) (low)				
0048h	Trip info. 6 (current)			Output current at tripping.	0.01 [A]
0049h	Trip info. 6 (voltage)			DC bus voltage at tripping.	0.1 [VDC]
004Ah	Trip info. 6 (running time) (high)			Cumulative operation RUN time at tripping.	1 [hr]
004Bh	Trip info. 6 (running time) (low)				
004Ch	Trip info. 6 (power-on time) (high)			Cumulative power-on time at tripping.	1 [hr]
004Dh	Trip info. 6 (power-on time) (low)				
004Eh	Warning monitoring	d090	R	See the “(ii) List of warning data” below.	-
004Fh to 08FFh	(reserved)	-	-	(Inaccessible)	-
0900h	ENTER command	-	W	0: recalculate the internal value	-
0901h to 1000h	(reserved)	-	-	(Inaccessible)	-

(i) List of inverter trip factors

Upper part of trip factor code (indicating the factor)		Lower part of trip factor code (indicating the inverter status)	
Name	Code	Name	Code
No trip factor	0	Resetting	0
Overcurrent event during constant speed	1	Stopping	1
Overcurrent event during deceleration	2	Decelerating	2
Overcurrent event during acceleration	3	Constant speed operation	3
Overcurrent event during other conditions	4	Accelerating	4
Overload protection	5	Operating at zero frequency	5
Overvoltage protection	7	Starting	6
Memory error	8	DC braking	7
Undervoltage	9	Overload restricted	8
Current detection error	10		
CPU error	11		
External trip	12		
USP error	13		
Ground fault protection	14		
Input overvoltage protection	15		
Thermal detection error	19		
Temperature error	21		
Driver error	30		
Output phase loss protection	34		
Low-speed overload protection	38		
Step out error	39		
Operator connection error	40		
Modbus communication error	41		

(ii) List of warning data

Modbus data	Operator display	Condition		
1	H 001	Frequency upper limit (A061)	>	Maximum frequency (A004)
2	H 002	Frequency lower limit (A062)	>	Maximum frequency (A004)
3	H 005	Output frequency setting (F001), Multi-speed frequency 0 (A020)	>	Maximum frequency (A004)
10	H 015	Output frequency setting (F001), Multi-speed frequency 0 (A020)	>	Frequency upper limit (A061)
17	H 025	Frequency lower limit (A062)	>	Output frequency setting (F001), Multi-speed frequency 0 (A020)
23	H 031	Start frequency (b082)	>	Frequency upper limit (A061)
25	H 032	Start frequency (b082)	>	Frequency lower limit (A062)
27	H 035	Start frequency (b082)	>	Output frequency setting (F001), Multi-speed frequency 0 (A020)
30	H 037	Start frequency (b082)	>	Jog frequency (A038)
31	H 085	Output frequency setting (F001), Multi-speed frequency 0 (A020)	=	"Jump frequency (center) 1/2/3" ± "Jump frequency width (hysteresis) 1/2/3" (A063 ± A064, A065 ± A066, A067 ± A068)
33	H 086	Multi-speed frequency 1 to 7 (A021 to A027)	=	
34	H 091	Free V/f setting, frequency 7 (b112)	<	Frequency upper limit (A061)
36	H 092	Free V/f setting, frequency 7 (b112)	<	Frequency lower limit (A062)
38	H 095	Free V/f setting, frequency 7 (b112)	<	Output frequency setting (F001), Multi-speed frequency 0 (A020)
5	H 201	Frequency upper limit, 2nd motor (A261)	>	Maximum frequency, 2nd motor (A204)
6	H 202	Frequency lower limit, 2nd motor (A262)	>	Maximum frequency, 2nd motor (A204)
7	H 205	Output frequency setting (F001), Multi-speed frequency 0, 2nd motor (A220)	>	Maximum frequency, 2nd motor (A204)
14	H 215	Output frequency setting (F001), Multi-speed frequency 0, 2nd motor (A220)	>	Frequency upper limit, 2nd motor (A261)
21	H 225	Frequency lower limit, 2nd motor (A262)	>	Output frequency setting (F001), Multi-speed frequency 0, 2nd motor (A220)
24	H 231	Start frequency (b082)	>	Frequency upper limit, 2nd motor (A261)
26	H 232	Start frequency (b082)	>	Frequency lower limit, 2nd motor (A262)
28	H 235	Start frequency (b082)	>	Output frequency setting (F001), Multi-speed frequency 0, 2nd motor (A220)
32	H 285	Output frequency setting (F001), Multi-speed frequency 0, 2nd motor (A220)	=	"Jump frequency (center) 1/2/3" ± "Jump frequency width (hysteresis) 1/2/3" (A063 ± A064, A065 ± A066, A067 ± A068)
35	H 291	Free V/f setting, frequency 7 (b112)	<	Frequency upper limit, 2nd motor (A261)
37	H 292	Free V/f setting, frequency 7 (b112)	<	Frequency lower limit, 2nd motor (A262)
39	H 295	Free V/f setting, frequency 7 (b112)	<	Output frequency setting (F001), Multi-speed frequency 0, 2nd motor (A220)

Note) The warning data of the Modbus communication do not accord with the warning code of the operator.

(2) Registers (monitoring group d)

Register No.	Function name	Function code	R/W	Monitoring and setting items	Data resolution
1001h	Output frequency monitoring	d001 (high)	R	0 to 40000	0.01 [Hz]
1002h		d001 (low)			
1003h	Output current monitoring	d002	R	0 to 65530	0.01 [A]
1004h	Rotation direction monitoring	d003	R	0 (Stopped), 1 (Forward rotation), 2 (Reverse rotation)	-
1005h	PV monitoring	d004 (high)	R	0 to 1000000	0.01[%]
1006h		d004 (low)			
1007h	Intelligent input terminal status	d005	R	2^0: Terminal 1 to 2^4: Terminal 5	1 bit
1008h	Intelligent output terminal status	d006	R	2^0: Terminal 11, 2^1: Relay Terminal	1 bit
1009h	Scaled output frequency monitoring	d007 (high)	R	0 to 3999600	0.01
100Ah		d007 (low)			
100Bh to 1010h	(Reserved)	-	-	(Inaccessible)	-
1011h	Output voltage monitoring	d013	R	0 to 6000	0.1 [V]
1012h	Input power monitoring	d014	R	0 to 9999	0.1 [kW]
1013h	Cumulative power monitoring	d015 (high)	R	0 to 9999999	0.1
1014h		d015 (low)			
1015h	Cumulative operation RUN time monitoring	d016 (high)	R	0 to 999999	1 [hr]
1016h		d016 (low)			
1017h	Cumulative power-on time monitoring	d017 (high)	R	0 to 999999	1 [hr]
1018h		d017 (low)			
1019h	Heatsink temperature monitoring	d018	R	-200 to 1200	0.1 [°C]
101Ah to 1025h	(Reserved)	-	-	(Inaccessible)	-
1026h	DC bus voltage monitoring	d102	R	0 to 10000	0.1 [VDC]
1027h	(Reserved)	-	-	(Inaccessible)	-
1028h	Electronic thermal overload monitoring	d104	R	0 to 1000	0.1 [%]
1029h to 1056h	(Reserved)	-	-	(Inaccessible)	-
1057h *)	Inverter mode monitoring	d060	R	0 (Induction motor), 1 (PM motor)	-
1058h to 1102h	(Reserved)	-	-	(Inaccessible)	-

*) Available in NE-S1 Ver.2.0 or later.

(3) Registers (group F)

Register No.	Function name	Function code	R/W	Monitoring and setting items	Data resolution
1103h	Acceleration time (1)	F002 (high)	R/W	0 to 360000	0.01 [s]
1104h		F002 (low)			
1105h	Deceleration time (1)	F003 (high)	R/W	0 to 360000	0.01 [s]
1106h		F003 (low)			
1107h	Run key routing	F004	R/W	0 (Forward), 1 (Reverse)	-
1108h to 1200h	(Reserved)	-	-	(Inaccessible)	-

(4) Registers (group A)

Register No.	Function name	Function code	R/W	Monitoring and setting items	Data resolution
1201h	Frequency source	A001	R/W	0 (VR), 1 (Control terminal), 2 (Operator), 3 (Modbus network input), 10 (Calculate function output)	-
1202h	Run command source *)	A002	R/W	1 (Control terminal), 2 (Operator), 3 (Modbus network input)	-
1203h	Base frequency	A003	R/W	300 to "maximum frequency (A004)"	0.1 [Hz]
1204h	Maximum frequency	A004	R/W	"Base frequency (A003)" to 4000	0.1 [Hz]
1205h to 120Bh	(Reserved)	-	-	(Inaccessible)	-
120Ch	[O/OI] input active range start frequency	A011	R/W	0 to 40000	0.01 [Hz]
120Dh	(Reserved)	-	-	(Inaccessible)	-
120Eh	[O/OI] input active range end frequency	A012	R/W	0 to 40000	0.01 [Hz]
120Fh	[O/OI] input active range start ratio	A013	R/W	0 to "[O/OI] input active range end ratio (A014)"	1 [%]
1210h	[O/OI] input active range end ratio	A014	R/W	"[O/OI] input active range start ratio (A013)" to 100	1 [%]
1211h	[O/OI] input start frequency enable	A015	R/W	0 (Use offset (A011 value)), 1 (Use 0 Hz)	-
1212h	Analog input filter.	A016	R/W	1 to 30 (x 2 ms), 31 (500 ms fixed filter ± with 0.1 Hz hysteresis)	1
1213,4h	(Reserved)	-	-	(Inaccessible)	-
1215h	Multi-speed operation selection	A019	R/W	0 (Binary operation), 1 (Bit operation)	-
1216h	(Reserved)	-	-	(Inaccessible)	-
1217h	Multi-speed frequency 0	A020	R/W	0 or "Start frequency (b082)" to "Maximum frequency (A004)"	0.01 [Hz]
1218h	(Reserved)	-	-	(Inaccessible)	-
1219h	Multi-speed frequency 1	A021	R/W	0 or "Start frequency (b082)" to "Maximum frequency (A004/A204)"	0.01 [Hz]
121Ah	(Reserved)	-	-	(Inaccessible)	-
121Bh	Multi-speed frequency 2	A022	R/W	0 or "Start frequency (b082)" to "Maximum frequency (A004/A204)"	0.01 [Hz]
121Ch	(Reserved)	-	-	(Inaccessible)	-
121Dh	Multi-speed frequency 3	A023	R/W	0 or "Start frequency (b082)" to "Maximum frequency (A004/A204)"	0.01 [Hz]
121Eh	(Reserved)	-	-	(Inaccessible)	-
121Fh	Multi-speed frequency 4	A024	R/W	0 or "Start frequency (b082)" to "Maximum frequency (A004/A204)"	0.01 [Hz]
1220h	(Reserved)	-	-	(Inaccessible)	-
1221h	Multi-speed frequency 5	A025	R/W	0 or "Start frequency (b082)" to "Maximum frequency (A004/A204)"	0.01 [Hz]
1222h	(Reserved)	-	-	(Inaccessible)	-
1223h	Multi-speed frequency 6	A026	R/W	0 or "Start frequency (b082)" to "Maximum frequency (A004/A204)"	0.01 [Hz]
1224h	(Reserved)	-	-	(Inaccessible)	-
1225h	Multi-speed frequency 7	A027	R/W	0 or "Start frequency (b082)" to "Maximum frequency (A004/A204)"	0.01 [Hz]
1226h to 1237h	(Reserved)	-	-	(Inaccessible)	-

*) After changing the setting, keep the time 40 ms or longer before actually giving run command.

Register No.	Function name	Function code	R/W	Monitoring and setting items	Data resolution
1238h	Jog frequency	A038	R/W	"Start frequency (b082)" to 999	0.01 [Hz]
1239h	Jog stop mode	A039	R/W	0 (Free-run stop [invalid during run]), 1 (Controlled deceleration [invalid during run]), 2 (DC braking to stop [invalid during run]), 3 (Free-run stop [valid during run]), 4 (Controlled deceleration [valid during run]), 5 (DC braking to stop [valid during run])	-
123Ah	(Reserved)	-	-	(Inaccessible)	-
123Bh	Torque boost selection	A041	R/W	0 (Manual torque boost), 1 (Automatic torque boost)	-
123Ch	Manual torque boost value	A042	R/W	0 to 200	0.1 [%]
123Dh	Manual torque boost frequency	A043	R/W	0 to 500	0.1 [%]
123Eh	V/f characteristic curve	A044	R/W	0 (Constant torque), 1 (Reduced torque (1.7th power)), 2 (Free V/f)	-
123Fh	V/f gain	A045	R/W	20 to 100	1 [%]
1240h	Voltage compensation gain for automatic torque boost	A046	R/W	0 to 255	1 [%]
1241h	Slip compensation gain for automatic torque boost	A047	R/W	0 to 255	1 [%]
1242h to 1244h	(Reserved)	-	-	(Inaccessible)	-
1245h	DC braking enable	A051	R/W	0 (Disabled), 1 (Enabled during stop), 2 (Frequency command)	-
1246h	DC braking frequency	A052	R/W	0 to 6000	0.01 [Hz]
1247h	DC braking wait time	A053	R/W	0 to 50	0.1 [s]
1248h	DC braking force for deceleration	A054	R/W	0 to 100	1 [%]
1249h	DC braking time for deceleration	A055	R/W	0 to 100	0.1 [s]
124Ah	DC braking / edge or level detection for [DB] input	A056	R/W	0 (Edge detection), 1 (Level detection)	-
124Bh	DC braking force at start	A057	R/W	0 to 100	1 [%]
124Ch	DC braking time at start	A058	R/W	0 to 100	0.1 [s]
124Dh	Carrier frequency during DC braking	A059	R/W	20 to 150	0.1 [kHz]
124E,Fh	(Reserved)	-	-	(Inaccessible)	-
1250h	Frequency upper limit	A061	R/W	0 or "Frequency lower limit (A062)" to "Maximum frequency (A004)"	0.01 [Hz]
1251h	(Reserved)	-	-	(Inaccessible)	-
1252h	Frequency lower limit	A062	R/W	0 or "Start frequency (b082)" to " Frequency upper limit (A061)"	0.01 [Hz]
1253h	(Reserved)	-	-	(Inaccessible)	-
1254h	Jump frequency (center) 1	A063	R/W	0 to 40000	0.01 [Hz]
1255h	Jump frequency width (hysteresis) 1	A064	R/W	0 to 1000	0.01 [Hz]
1256h	(Reserved)	-	-	(Inaccessible)	-
1257h	Jump frequency (center) 2	A065	R/W	0 to 40000	0.01 [Hz]
1258h	Jump frequency width (hysteresis) 2	A066	R/W	0 to 1000	0.01 [Hz]
1259h	(Reserved)	-	-	(Inaccessible)	-
125Ah	Jump frequency (center) 3	A067	R/W	0 to 40000	0.01 [Hz]
125Bh	Jump frequency width (hysteresis) 3	A068	R/W	0 to 1000	0.01 [Hz]
125Ch	(Reserved)	-	-	(Inaccessible)	-
125Dh	Acceleration hold frequency	A069	R/W	0 to 40000	0.01 [Hz]
125Eh	Acceleration hold time	A070	R/W	0 to 600	0.1 [s]

Register No.	Function name	Function code	R/W	Monitoring and setting items	Data resolution
125Fh	PID enable	A071	R/W	0 (PID Disabled), 1 (PID Enabled), 2 (PID Enabled with reverse output)	-
1260h	PID proportional gain	A072	R/W	0 to 2500	0.01
1261h	PID integral time constant	A073	R/W	0 to 36000	0.1 [s]
1262h	PID derivative time constant	A074	R/W	0 to 10000	0.01 [s]
1263h	PV scale conversion	A075	R/W	1 to 9999	0.01
1264h	PV source	A076	R/W	1 ([O/OI] terminal), 2 (Modbus network input), 10 (Calculate function output)	-
1265h	Reverse PID action	A077	R/W	0 (PID input = SP–PV), 1 (PID input = – (SP–PV))	-
1266h	PID variation range	A078	R/W	0 to 1000	0.1 [%]
1267,8h	(Reserved)	-	-	(Inaccessible)	-
1269h	AVR function selection	A081	R/W	0 (AVR enabled), 1 (AVR disabled), 2 (AVR enabled except during deceleration)	-
126Ah	AVR voltage selection	A082	R/W	200 V class: 0 (200V), 1 (215V), 2 (220V), 3 (230V), 4 (240V), 400 V class: 5 (380V), 6 (400V), 7 (415V), 8 (440V), 9 (460V), 10 (480V)	-
126Bh	AVR filter time constant	A083	R/W	0 to 1000	0.001 [s]
126Ch	AVR deceleration gain	A084	R/W	50 to 200	1 [%]
126Dh	Energy-saving operation mode	A085	R/W	0 (Normal operation), 1 (Energy-saving operation)	-
126Eh	Energy-saving mode tuning	A086	R/W	0 to 1000	0.1 [%]
126Fh to 1273h	(Reserved)	-	-	(Inaccessible)	
1274h	Acceleration time (2)	A092 (high)	R/W	0 to 360000	0.01 [s]
1275h		A092 (low)			
1276h	Deceleration time (2)	A093 (high)	R/W	0 to 360000	0.01 [s]
1277h		A093 (low)			
1278h	Selection method to switch to Acc2/Dec2 profile	A094	R/W	0 ([2CH] input from terminal), 1 (Transition frequency), 2 (Forward and reverse)	-
1279h	(Reserved)	-	-	(Inaccessible)	-
127Ah	Acc1 to Acc2 frequency transition point	A095	R/W	0 to 40000	0.01 [Hz]
127Bh	(Reserved)	-	-	(Inaccessible)	-
127Ch	Dec2 to Dec1 frequency transition point	A096	R/W	0 to 40000	0.01 [Hz]
127Dh	Acceleration curve selection	A097	R/W	0 (Linear), 1 (S-curve), 2 (U-curve), 3 (Inverse U-curve)	-
127Eh	Deceleration curve selection	A098	R/W		
127Fh to 12A4h	(Reserved)	-	-	(Inaccessible)	-
12A5h	Acceleration curve constant	A131	R/W	1 (smallest swelling) to 10 (largest swelling)	-
12A6h	Deceleration curve constant	A132	R/W	1 (smallest swelling) to 10 (largest swelling)	-
12A7h to 12AEh	(Reserved)	-	-	(Inaccessible)	-

Register No.	Function name	Function code	R/W	Monitoring and setting items	Data resolution
12AFh	A input selection for calculate function	A141	R/W	0 (Operator), 1 (VR), 2 (Terminal [O/OI] input), 4 (Modbus network input)	-
12B0h	B input selection for calculate function	A142	R/W		
12B1h	Calculation symbol	A143	R/W	0 (ADD: A141 + A142), 1 (SUB: A141 – A142), 2 (MUL: A141 x A142)	-
12B2,3h	(Reserved)	-	-	(Inaccessible)	-
12B4h	ADD frequency	A145	R/W	0 to 40000	0.01 [Hz]
12B5h	ADD direction selection	A146	R/W	0 ("Frequency command" + "ADD frequency (A145)"), 1 ("Frequency command" – "ADD frequency (A145)")	-
12B6h to 12BDh	(Reserved)	-	-	(Inaccessible)	-
12BEh	Deceleration hold frequency	A154	R/W	0 to 40000	0.01 [Hz]
12BFh	Deceleration hold time	A155	R/W	0 to 600	0.1 [s]
12C0h	(Reserved)	-	-	(Inaccessible)	-
12C1h	PID sleep function action threshold	A156	R/W	0 to 40000	0.01 [Hz]
12C2h	PID sleep function action delay time	A157	R/W	0 to 255	0.1 [s]
12C3h	(Reserved)	-	-	(Inaccessible)	-
12C4h	PID sleep function return threshold	A158	R/W	0 to 40000	0.01[Hz]
12C5,6h	(Reserved)	-	-	(Inaccessible)	-
12C7h	[VR] input active range start frequency	A161	R/W	0 to 40000	0.01 [Hz]
12C8h	(Reserved)	-	-	(Inaccessible)	-
12C9h	[VR] input active range end frequency	A162	R/W	0 to 40000	0.01 [Hz]
12CAh	[VR] input active range start ratio	A163	R/W	0 to "[VR] input active range end ratio (A164)"	1 [%]
12CBh	[VR] input active range end ratio	A164	R/W	"[VR] input active range start ratio (A163)" to 100	1 [%]
12CCh	[VR] input start frequency enable	A165	R/W	0 (Use offset (A161 value)), 1 (Use 0 Hz)	-
12CDh to 1300h	(Reserved)	-	-	(Inaccessible)	-

(5) Registers (group B)

Register No.	Function name	Function code	R/W	Monitoring and setting items	Data resolution
1301h	Restart mode on undervoltage trip	b001	R/W	0 (Tripping), 1 (Restarting with 0 Hz), 2 (Restarting with active frequency matching), 3 (Tripping after deceleration and stopping with active frequency matching)	-
1302h	Allowable undervoltage time	b002	R/W	3 to 250	0.1 [s]
1303h	Retry wait time before motor restart	b003	R/W	3 to 1000	0.1 [s]
1304h	Instantaneous undervoltage trip alarm enable	b004	R/W	0 (Disabled), 1 (Enabled), 2 (Disabled during stop and deceleration stop)	-
1305h	Number of restarts on undervoltage trip	b005	R/W	0 (Restart 16 times), 1 (Unlimited)	-
1306,7h	(Reserved)	-	-	(Inaccessible)	-
1308h	Restart frequency threshold	b007	R/W	0 to 40000	0.01 [Hz]
1309h	Restart mode on overvoltage / overcurrent trip	b008	R/W	0 (Tripping), 1 (Restarting with 0 Hz), 2 (Restarting with active frequency matching), 3 (Tripping after deceleration and stopping with active frequency matching)	-
130Ah	(Reserved)	-	-	(Inaccessible)	-
130Bh	Number of retry on overvoltage / overcurrent trip	b010	R/W	1 to 3	1 [times]
130Ch	Retry wait time on overvoltage / overcurrent trip	b011	R/W	3 to 1000	0.1 [s]
130Dh	Level of electronic thermal	b012	R/W	2000 to 10000	0.01 [%]
130Eh	Electronic thermal characteristic	b013	R/W	0 (Reduced torque), 1 (Constant torque), 2 (Free setting)	-
130Fh	(Reserved)	-	-	(Inaccessible)	-
1310h	Free setting electronic thermal frequency 1	b015	R/W	0 to "free setting electronic thermal frequency 2 (b017)"	1 [Hz]
1311h	Free setting electronic thermal current 1	b016	R/W	0 to 10000	0.01 [%]
1312h	Free setting electronic thermal frequency 2	b017	R/W	"free setting electronic thermal frequency 1 (b015)" to "free setting electronic thermal frequency 3 (b019)"	1 [Hz]
1313h	Free setting electronic thermal current 2	b018	R/W	0 to 10000	0.01 [%]
1314h	Free setting electronic thermal frequency 3	b019	R/W	"free setting electronic thermal frequency 2 (b017)" to 400	1 [Hz]
1315h	Free setting electronic thermal current 3	b020	R/W	0 to 10000	0.01 [%]
1316h	Overload restriction operation mode	b021	R/W	0 (Disabled), 1 (Enabled during acceleration and constant speed operation), 2 (Enabled during constant speed operation only)	-
1317h	Overload restriction level	b022	R/W	2000 to 20000	0.01 [%]
1318h	Deceleration rate at overload restriction	b023	R/W	1 to 30000	0.1 [s]
1319h	Overload restriction operation mode 2	b024	R/W	0 (Disabled), 1 (Enabled during acceleration and constant speed operation), 2 (Enabled during constant speed operation only)	-
131Ah	Overload restriction level 2	b025	R/W	2000 to 20000	0.01 [%]
131Bh	Deceleration rate 2 at overload restriction	b026	R/W	1 to 30000	0.1 [s]
131Ch	OC suppression selection	b027	R/W	0 (Disabled), 1 (Enabled)	-

Register No.	Function name	Function code	R/W	Monitoring and setting items	Data resolution
131Dh	Current level of active frequency matching	b028	R/W	2000 to 20000	0.01 [%]
131Eh	Deceleration rate of active frequency matching	b029	R/W	1 to 30000	0.1 [s]
131Fh	Start frequency of active frequency matching	b030	R/W	0 (Frequency at previous shutoff), 1 (Maximum frequency), 2 (Frequency command)	-
1320h	Software lock mode selection	b031	R/W	0 (Disabling change of data other than b031 when [SFT] terminal is on), 1 (Disabling change of data other than b031, F001, A020, A220, A021 to A027, and A038 when [SFT] terminal is on), 2 (Disabling change of data other than b031), 3 (Disabling change of data other than b031, F001, A020, A220, A021 to A027, and A038), 10 (Enabling data changes during operation)	-
1321,2h	(Reserved)	-	-	(Inaccessible)	-
1323h	Run/power ON warning time	b034 (high)	R/W	0 to 65535	10 [hr]
1324h		b034 (low)	R/W		
1325h	Rotation direction restriction	b035	R/W	0 (No restriction), 1 (Reverse rotation is restricted), 2 (Forward rotation is restricted)	-
1326h	Reduced voltage start selection	b036	R/W	0 (The function disabled), 1 to 250 (x 4 ms)	-
1327h	Function code display restriction	b037	R/W	0 (Full display), 1 (Function-specific display), 3 (Data comparison display), 4 (Basic display), 5 (Monitor display only)	-
1328h	Initial display selection	b038	R/W	0, 1 to 60, 201, 202	-
1329h to 1333h	(Reserved)	-	-	(Inaccessible)	-
1334h	Controlled deceleration on power loss selection	b050	R/W	0 (Disabled), 1 (Deceleration stop), 2 (Deceleration stop with DC bus voltage controlled), 3 (Deceleration stop with DC bus voltage controlled, then restart)	-
1335h	DC bus voltage trigger level of controlled deceleration	b051	R/W	200 V class: 0 to 4000, 400 V class: 0 to 8000	0.1 [VDC]
1336h	Overvoltage threshold of controlled deceleration	b052	R/W	200 V class: 0 to 4000, 400 V class: 0 to 8000	0.1 [VDC]
1337h	(Reserved)	-	-	(Inaccessible)	-
1338h	Deceleration time of controlled deceleration	b053	R/W	1 to 30000	0.01 [s]
1339h	Initial frequency drop of controlled deceleration	b054	R/W	0 to 1000	0.01 [Hz]
133Ah to 133Eh	(Reserved)	-	-	(Inaccessible)	-
133Fh	Maximum-limit level of window comparator (O/OI)	b060	R/W	0 to 100 (Lower limit: b061 + (b062 x 2))	1 [%]
1340h	Minimum-limit level of window comparator (O/OI)	b061	R/W	0 to 100 (Higher limit: b060 - (b062 x 2))	1 [%]
1341h	Hysteresis width of window comparator (O/OI)	b062	R/W	0 to 10 (Higher limit : (b060 - b061) / 2)	1 [%]
1342h to 1348h	(Reserved)	-	-	(Inaccessible)	-
1349h	Operation level at O/OI disconnection	b070	R/W	0 to 100, 255 (no)	1 [%]
134Ah to 1350h	(reserved)	-	-	(Inaccessible)	-

Register No.	Function name	Function code	R/W	Monitoring and setting items	Data resolution
1351h	Cumulative power clearance	b078	R/W	0 (OFF), 1 (Clearance by setting)	-
1352h	Cumulative power display gain	b079	R/W	1 to 1000	1
1353,4h	(Reserved)	-	-	(Inaccessible)	-
1355h	Start frequency	b082	R/W	1 to 999	0.01 [Hz]
1356h	Carrier frequency	b083	R/W	20 to 150	0.1 [kHz]
1357h	Initialization mode (parameters or trip history)	b084	R/W	0 (Disabled), 1 (Clearing the trip history), 2 (Initializing all parameters), 3 (Clearing the trip history and initializing all parameters)	-
1358h	Initial data selection	b085	R/W	0 (Mode 0), 1 (Mode 1), 3 (Mode 3)	-
1359h	Frequency scaling conversion factor	b086	R/W	1 to 9999	0.01
135Ah	STOP/RESET key enable	b087	R/W	0 (Enabled), 1 (Disabled), 2 (Enabled only trip reset)	-
135Bh	Restart mode after FRS	b088	R/W	0 (Restarting from 0 Hz), 1 (Restarting from active frequency matching)	-
135Ch	Automatic carrier frequency reduction	b089	R/W	0 (Disabled), 1 (Enabled (depending on the output current)), 2 (Enabled (depending on the heatsink temperature))	-
135Dh	(Reserved)	-	-	(Inaccessible)	-
135Eh	Stop mode selection	b091	R/W	0 (Deceleration stop), 1 (Free-run stop)	-
135F,60h	(Reserved)	-	-	(Inaccessible)	-
1361h	Initialization target data setting	b094	R/W	0 (All parameters), 1 (All parameters except terminal and communication data)	-
1362h to 1366h	(Reserved)	-	-	(Inaccessible)	-
1367h	Free V/f setting, frequency 1	b100	R/W	0 to "free V/f setting, frequency 2 (b102)"	1 [Hz]
1368h	Free V/f setting, voltage 1	b101	R/W	200 V class: 0 to 3000, 400 V class: 0 to 6000	0.1 [V]
1369h	Free V/f setting, frequency 2	b102	R/W	"free V/f setting, frequency 1 (b100)" to "free V/f setting, frequency 3 (b104)"	1 [Hz]
136Ah	Free V/f setting, voltage 2	b103	R/W	200 V class: 0 to 3000, 400 V class: 0 to 6000	0.1 [V]
136Bh	Free V/f setting, frequency 3	b104	R/W	"free V/f setting, frequency 2 (b102)" to "free V/f setting, frequency 4 (b106)"	1 [Hz]
136Ch	Free V/f setting, voltage 3	b105	R/W	200 V class: 0 to 3000, 400 V class: 0 to 6000	0.1 [V]
136Dh	Free V/f setting, frequency 4	b106	R/W	"free V/f setting, frequency 3 (b104)" to "free V/f setting, frequency 5 (b108)"	1 [Hz]
136Eh	Free V/f setting, voltage 4	b107	R/W	200 V class: 0 to 3000, 400 V class: 0 to 6000	0.1 [V]
136Fh	Free V/f setting, frequency 5	b108	R/W	"free V/f setting, frequency 4 (b106)" to "free V/f setting, frequency 6 (b110)"	1 [Hz]
1370h	Free V/f setting, voltage 5	b109	R/W	200 V class: 0 to 3000, 400 V class: 0 to 6000	0.1 [V]
1371h	Free V/f setting, frequency 6	b110	R/W	"free V/f setting, frequency 5 (b108)" to "free V/f setting, frequency 7 (b112)"	1 [Hz]
1372h	Free V/f setting, voltage 6	b111	R/W	200 V class: 0 to 3000, 400 V class: 0 to 6000	0.1 [V]
1373h	Free V/f setting, frequency 7	b112	R/W	"free V/f setting, frequency 6 (b110)" to 400	1 [Hz]
1374h	Free V/f setting, voltage 7	b113	R/W	200 V class: 0 to 3000, 400 V class: 0 to 6000	0.1 [V]
1375h to 1384h	(Reserved)	-	-	(Inaccessible)	-

Register No.	Function name	Function code	R/W	Monitoring and setting items	Data resolution
1385h	Deceleration overvoltage suppression enable	b130	R/W	0 (Disabled), 1 (Enabled (DC voltage constant control)), 2 (Enabled at the deceleration (with acceleration)), 3 (Enabled at the constant and deceleration (with acceleration))	-
1386h	Deceleration overvoltage suppression level	b131	R/W	200 V class: 330 to 390, 400 V class: 660 to 780	1 [VDC]
1387h	Deceleration overvoltage suppression const.	b132	R/W	10 to 3000	0.01 [s]
1388h	Deceleration overvoltage suppression proportional gain	b133	R/W	0 to 500	0.01
1389h	Deceleration overvoltage suppression integral time	b134	R/W	0 to 1500	0.1 [s]
138Ah to 1398h	(Reserved)	-	-	(Inaccessible)	-
1399h	Display external operator connected	b150	R/W	1h to 60h (BCD) (d001 to d060) [Ex. 15h: d015]	-
139Ah to 13A2h	(Reserved)	-	-	(Inaccessible)	-
13A3h	1st parameter of Dual Monitor	b160	R/W	1h to 18h (BCD) (d001 to d018) [Ex. 15h: d015]	-
13A4h	2nd parameter of Dual Monitor	b161	R/W	1h to 18h (BCD) (d001 to d018) [Ex. 15h: d015]	-
13A5h	(Reserved)	-	-	(Inaccessible)	-
13A6h	Frequency set in monitoring	b163	R/W	0 (Frequency set disabled), 1 (Frequency set enabled)	-
13A7h	Automatic return to the initial display	b164	R/W	0 (Disabled), 1 (Enabled)	-
13A8h	Operation at external operator connection loss	b165	R/W	0 (Tripping), 1 (Tripping after decelerating and stopping the motor), 2 (Ignoring errors), 3 (Stopping the motor after free-running), 4 (Decelerating and stopping the motor)	-
13A9h	Data Read/Write selection	b166	R/W	0 (Read/Write OK), 1 (Read/Write protected)	-
13AAh to 13ADh	(Reserved)	-	-	(Inaccessible)	-
13AEh *)	Inverter mode selection	b171	R/W	0 (Disabling), 1 (Induction motor), 3 (PM motor)	-
13AFh to 13B6h	(Reserved)	-	-	(Inaccessible)	-
13B7h	Initialization trigger	b180	R/W	0 (Disabling), 1 (Perform initialization)	-
13B8h to 1400h	(Reserved)	-	-	(Inaccessible)	-

*) Available in NE-S1 Ver.2.0 or later.

(6) Registers (group C)

Register No.	Function name	Function code	R/W	Monitoring and setting items	Data resolution
1401h	Intelligent input [1] function	C001	R/W	0 (FW: Forward run/stop), 1 (RV: Reverse run/stop), 2 (CF1: Multi-speed selection, Bit 1), 3 (CF2: Multi-speed selection, Bit 2), 4 (CF3: Multi-speed selection, Bit 3), 6 (JG: Jogging), 7 (DB: External DC braking), 8 (SET: Set 2nd motor data), 9 (2CH: Two-stage acceleration and deceleration), 11 (FRS: Free-run stop), 12 (EXT: External trip), 13 (USP: Unattended start protection), 15 (SFT: Software lock), 18 (RS: Reset inverter), 20 (STA: Start (3-wire interface)), 21 (STP: Stop (3-wire interface)), 22 (F/R: FW,RV (3-wire interface)), 23 (PID: PID disable), 24 (PIDC: PID reset), 27 (UP: Remote control UP function), 28 (DWN: Remote control DOWN function), 29 (UDC: Remote control data clearing), 31 (OPE: Operator control), 32 (SF1: Multi-speed selection, Bit operation Bit 1), 33 (SF2: Multi-speed selection, Bit operation Bit 2), 34 (SF3: Multi-speed selection, Bit operation Bit 3), 39 (OLR: Overload restriction source changeover), 50 (ADD: ADD frequency enable), 51 (F-TM: Force terminal mode), 53 (KHC: Clear watt-hour data), 65 (AHD: Analog command hold), 83 (HLD: Retain output frequency), 84 (ROK: Permission of run command), 86 (DISP: Display limitation), 255 (NO: No assignment)	-
1402h	Intelligent input [2] function	C002	R/W		-
1403h	Intelligent input [3] function	C003	R/W		-
1404h	Intelligent input [4] function	C004	R/W		-
1405h	Intelligent input [5] function	C005	R/W		-
1406h to 140Ah	(Reserved)	-	-	(Inaccessible)	-
140Bh	Intelligent input [1] active state	C011	R/W	0 (Normally open (NO)), 1 (Normally closed (NC))	-
140Ch	Intelligent input [2] active state	C012	R/W	0 (Normally open (NO)), 1 (Normally closed (NC))	-
140Dh	Intelligent input [3] active state	C013	R/W	0 (Normally open (NO)), 1 (Normally closed (NC))	-
140Eh	Intelligent input [4] active state	C014	R/W	0 (Normally open (NO)), 1 (Normally closed (NC))	-
140Fh	Intelligent input [5] active state	C015	R/W	0 (Normally open (NO)), 1 (Normally closed (NC))	-
1410h to 1414h	(Reserved)	-	-	(Inaccessible)	-

Register No.	Function name	Function code	R/W	Monitoring and setting items	Data resolution
1415h	Intelligent output [11] function	C021	R/W	0 (RUN: Run signal), 1 (FA1: Frequency arrival type1 – constant speed), 2 (FA2: Frequency arrival type2 – over frequency), 3 (OL: Overload advance notice signal), 4 (OD: Output deviation for PID control), 5 (AL: Alarm signal), 6 (FA3: Frequency arrival type3 – set frequency), 9 (UV: Undervoltage), 11 (RNT: Run time expired), 12 (ONT: Power on time expired), 13 (THM: Thermal warning), 21 (ZS: Zero Hz speed detection signal), 27 (Dc: Analog input disconnect detection), 31 (FBV: PID second stage output), 32 (NDc: Network disconnect detection), 33 (LOG: Logic output function), 41 (FR: Starting contact signal), 42 (OHF: Heatsink overheat warning), 43 (LOC: Low current detection), 50 (IRDY: Inverter ready signal), 51 (FWR: Forward rotation), 52 (RVR: Reverse rotation), 53 (MJA: Major failure signal), 54 (WC: Window comparator for analog input), 58 (FREF: Frequency command source signal), 59 (REF: Run command source signal), 60 (SETM: 2nd motor selection), 255 (NO: No assignment)	-
1416h to 1419h	(Reserved)	-	-	(Inaccessible)	-
141Ah	Intelligent relay function	C026	R/W	Same as the settings of C021.	-
141Bh	[FM] terminal selection (pulse/PWM output)	C027	R/W	0 (Output frequency (PWM)), 1 (Output current (PWM)), 3 (Output frequency (pulse train)), 4 (Output voltage (PWM)), 5 (Input power (PWM)), 6 (Electronic thermal load ratio (PWM)), 7 (LAD frequency (PWM)), 8 (Output current (pulse train)), 10 (Heatsink temperature (PWM))	-
141C,Dh	(reserved)	-	-	(Inaccessible)	-
141Eh	Digital current monitor reference value	C030	R/W	2000 to 20000	0.01 [%]
141Fh	Intelligent output [11] active state	C031	R/W	0 (Normally open (NO)), 1 (Normally closed (NC))	-
1420h to 1423h	(Reserved)	-	-	(Inaccessible)	-
1424h	Intelligent relay active state	C036	R/W	0 (Normally open (NO)), 1 (Normally closed (NC))	-
1425h	(Reserved)	-	-	(Inaccessible)	-
1426h	Output mode of low current detection	C038	R/W	0 (During acceleration, deceleration, and constant speed), 1 (During constant speed only)	-
1427h	Low current detection level	C039	R/W	0 to 20000	0.01 [%]

Register No.	Function name	Function code	R/W	Monitoring and setting items	Data resolution
1428h	Output mode of overload warning	C040	R/W	0 (During acceleration, deceleration, and constant speed), 1 (During constant speed only)	-
1429h	Overload warning level	C041	R/W	0 to 20000	0.01 [%]
142Ah	(Reserved)	-	-	(Inaccessible)	-
142Bh	Frequency arrival setting for acceleration	C042	R/W	0 to 40000	0.01 [Hz]
142Ch	(Reserved)	-	-	(Inaccessible)	-
142Dh	Frequency arrival setting for deceleration	C043	R/W	0 to 40000	0.01 [Hz]
142Eh	PID deviation level	C044	R/W	0 to 1000	0.1 [%]
142Fh to 1437h	(Reserved)	-	-	(Inaccessible)	-
1438h	PV comparison signal output high limit	C052	R/W	0 to 1000	0.1 [%]
1439h	PV comparison signal output low limit	C053	R/W	0 to 1000	0.1 [%]
143Ah to 1440h	(Reserved)	-	-	(Inaccessible)	-
1441h	Electronic thermal warning level	C061	R/W	0 to 100	1 [%]
1442h	(Reserved)	-	-	(Inaccessible)	-
1443h	Zero speed detection level	C063	R/W	0 to 10000	0.01 [Hz]
1444h	Heatsink overheat warning	C064	R/W	0 to 110	1 [°C]
1445h to 1449h	(Reserved)	-	-	(Inaccessible)	-
144Ah	Selection of OPE/Modbus	C070	R/W	0 (OPE), 1 (Modbus)	-
144Bh	Communication speed	C071	R/W	4 (4800 bps), 5 (9600 bps), 6 (19.2 kbps), 7 (38.4 kbps)	-
144Ch	Modbus address	C072	R/W	1 to 247	-
144Dh	(Reserved)	-	-	(Inaccessible)	-
144Eh	Communication parity	C074	R/W	0 (No parity), 1 (Even parity), 2 (Odd parity)	-
144Fh	Communication stop bit	C075	R/W	1 (1 bit), 2 (2 bit)	-
1450h	Communication error selection	C076	R/W	0 (Tripping), 1 (Tripping after decelerating and stopping the motor), 2 (Ignoring errors), 3 (Stopping the motor after free-running), 4 (Decelerating and stopping the motor)	-
1451h	Communication error detection time	C077	R/W	0 to 9999	0.01 [s]
1452h	Communication wait time	C078	R/W	0 to 1000	1 [ms]
1453,4h	(Reserved)	-	-	(Inaccessible)	-
1455h	O/OI input gain calibration	C081	R/W	0 to 2000	0.1 [%]
1456h to 145Eh	(Reserved)	-	-	(Inaccessible)	-
145Fh	(The parameter for factory use)	C091	R	(Inaccessible)	-
1460h to 1468h	(Reserved)	-	-	(Inaccessible)	-

Register No.	Function name	Function code	R/W	Monitoring and setting items	Data resolution
1469h	Up/Down memory mode selection	C101	R/W	0 (Not storing the frequency data), 1 (Storing the frequency data)	-
146Ah	Reset selection	C102	R/W	0 (Resetting the trip when [RS] terminal is ON, stops inverter if in run mode), 1 (Resetting the trip when [RS] terminal is OFF, stops inverter if in run mode), 2 (Resetting the trip when [RS] terminal is ON, no effect if in run mode)	-
146Bh	Restart mode after reset	C103	R/W	0 (Starting with 0 Hz), 1 (Starting with active frequency matching)	-
146Ch	UP/DWN clear mode	C104	R/W	0 (0 Hz), 1 (Original setting in the memory at power on)	-
146Dh	FM gain adjustment	C105	R/W	50 to 200	1 [%]
146Eh to 1485h	(Reserved)	-	-	(Inaccessible)	-
1486h	Intelligent output [11] on delay	C130	R/W	0 to 1000	0.1 [s]
1487h	Intelligent output [11] off delay	C131	R/W	0 to 1000	0.1 [s]
1488h to 148F	(Reserved)	-	-	(Inaccessible)	-
1490h	Intelligent relay output on delay	C140	R/W	0 to 1000	0.1 [s]
1491h	Intelligent relay output off delay	C141	R/W	0 to 1000	0.1 [s]
1492h	Logic output operand A	C142	R/W	Same as the settings of C021 and C026 (except those of LOG, NO)	-
1493h	Logic output operand B	C143	R/W	Same as the settings of C021 and C026 (except those of LOG, NO)	-
1494h	Logic output operator	C144	R/W	0 (C142 AND C143), 1 (C142 OR C143), 2 (C142 XOR C143)	-
1495h to 149Ah	(Reserved)	-	-	(Inaccessible)	-
149Bh	Button sensitivity selection	C151	R/W	0 to 250 (x 2 ms), 255 (no)	-
149Ch	Scroll sensitivity selection	C152	R/W	1 to 20	-
149D,Eh	(Reserved)	-	-	(Inaccessible)	-
149Fh	Ground fault detection	C155	R/W	0 (Disabled), 1 (Enabled)	-
14A0h	(Reserved)	-	-	(Inaccessible)	-
14A1h	Output phase loss detection	C157	R/W	0 (Disabled), 1 (Enabled)	-
14A2,3h	(Reserved)	-	-	(Inaccessible)	-
14A4h	Intelligent input [1] response time	C160	R/W	0 to 200 (x 2 ms)	-
14A5h	Intelligent input [2] response time	C161	R/W	0 to 200 (x 2 ms)	-
14A6h	Intelligent input [3] response time	C162	R/W	0 to 200 (x 2 ms)	-
14A7h	Intelligent input [4] response time	C163	R/W	0 to 200 (x 2 ms)	-
14A8h	Intelligent input [5] response time	C164	R/W	0 to 200 (x 2 ms)	-
14A9h to 14ACh	(Reserved)	-	-	(Inaccessible)	-
14ADh	Multi-speed determination time	C169	R/W	0 to 200 (x 10 ms)	-
14AEh to 1500h	(Reserved)	-	-	(Inaccessible)	-

(7) Registers (group H)

Register No.	Function name	Function code	R/W	Monitoring and setting items	Data resolution
1501h	Auto-tuning selection	H001	R/W	0 (Disabled), 1 (Not rotation), 2 (Rotation)	-
1502h	(Reserved)	-	-	(Inaccessible)	-
1503h	Motor capacity	H003	R/W	0 (0.10 kW) to 11 (5.50 kW)	-
1504h	Motor poles setting	H004	R/W	0 (2 poles) to 3 (8 poles)	-
1505,6h	(Reserved)	-	-	(Inaccessible)	-
1507h	Motor stabilization constant	H006	R/W	0 to 255	1 [%]
1508h to 156Fh	(Reserved)	-	-	(Inaccessible)	-
1570h *1)	PM motor rated voltage *2)	H101	R/W	200 V class: 1000 to 2400, 400 V class: 2000 to 4800	0.1 [V]
1571h *1)	PM motor code setting *2)	H102	R/W	0 (Hitachi standard), 1 (Auto-Tuning)	-
1572h *1)	PM motor capacity *2)	H103	R/W	0 (0.10 kW) to 12 (7.50 kW)	-
1573h *1)	PM motor pole setting *2)	H104	R/W	0 (2 poles) to 23 (48 poles)	-
1574h *1)	PM rated current *2)	H105	R/W	2000 to 10000	0.01 [%]
1575h *1)	PM const R (Resistance)	H106	R/W	1 to 65535	0.001 [Ω]
1576h *1)	PM const Ld (d-axis inductance)	H107	R/W	1 to 65535	0.01 [mH]
1577h *1)	PM const Lq (q-axis inductance)	H108	R/W	1 to 65535	0.01 [mH]
1578h *1)	PM const Ke (Induction voltage constant)	H109	R/W	1 to 65535	0.1 [mV/ (rad/s)]
1579h *1)	PM const J	H110 (high)	R/W	1 to 9999000	0.001 [kgm^2]
157Ah *1)	(Moment of inertia)	H110 (low)	R/W		
157Bh *1)	PM const R (Resistance, Auto)	H111	R/W	1 to 65535	0.001 [Ω]
157Ch *1)	PM const Ld (d-axis inductance, Auto)	H112	R/W	1 to 65535	0.01 [mH]
157Dh *1)	PM const Lq (q-axis inductance, Auto)	H113	R/W	1 to 65535	0.01 [mH]
157Eh *1)	PM const Ke (Induction voltage constant, Auto)	H114	R/W	1 to 65535	0.1 [mV/ (rad/s)]
157F,80h	(Reserved)	-	-	(Inaccessible)	-
1581h *1)	PM speed response	H116	R/W	1 to 1000	1 [%]
1582h *1)	PM starting current	H117	R/W	20 to 100	1 [%]
1583h *1)	PM starting time	H118	R/W	1 to 6000	0.01 [s]
1584h *1)	PM stabilization constant	H119	R/W	0 to 120	1 [%]
1585h	(Reserved)	-	-	(Inaccessible)	-
1586h *1)	PM minimum frequency ratio	H121	R/W	0 to 50	1 [%]
1587h *1)	PM no-load current	H122	R/W	0 to 100	1 [%]
1588h *1)	PM starting method selection	H123	R/W	0 (Not search), 1 (Search)	-
1589h to 1591h	(Reserved)	-	-	(Inaccessible)	-
1592h *1)	PM initial magnet position estimation detect time	H133	R/W	3 to 250	0.01 [s]
1593h *1)	PM initial magnet position estimation voltage gain	H134	R/W	0 to 120	1 [%]
1594h *1)	PM step-out protection selection	H135	R/W	0 (Disable), 1 (Error), 2 (Restart at 0 Hz)	-
1595h *1)	PM step-out protection level	H136	R/W	1 to 100	1 [%]
1596h	(Reserved)	-	-	(Inaccessible)	-
1597h *1)	PM overcurrent detection level	H141	R/W	10000 to 25000	0.01 [%]
1598h *1)	PM starting overcurrent detection level	H142	R/W	10000 to 25000	0.01 [%]
1599h to 2102h	(Reserved)	-	-	(Inaccessible)	-

*1) Available in NE-S1 Ver.2.0 or later.
*2) After changing the parameters, it is necessary to recalculate the internal variables. See Section "8.7 Re-calculate the internal variable".

(8) Registers (2nd motor control settings F group)

Register No.	Function name	Function code	R/W	Monitoring and setting items	Data resolution
2103h	Acceleration time (1), 2nd motor	F202 (high)	R/W	0 to 360000	0.01 [s]
2104h		F202 (low)	R/W		
2105h	Deceleration time (1), 2nd motor	F203 (high)	R/W	0 to 360000	0.01 [s]
2106h		F203 (low)	R/W		
2107h to 2200h	(Reserved)	-	-	(Inaccessible)	-

(9) Registers (2nd motor control settings A,B,C,H group)

Register No.	Function name	Function code	R/W	Monitoring and setting items	Data resolution
2201h	Frequency source, 2nd motor	A201	R/W	0 (VR), 1 (Control terminal), 2 (Operator), 3 (Modbus network input), 10 (Calculate function output)	-
2202h	Run command source, 2nd motor	A202	R/W	1 (Control terminal), 2 (Operator), 3 (Modbus network input)	-
2203h	Base frequency, 2nd motor	A203	R/W	300 to "maximum frequency, 2nd motor (A204)"	0.1 [Hz]
2204h	Maximum frequency, 2nd motor	A204	R/W	"Base frequency, 2nd motor (A203)" to 4000	0.1 [Hz]
2205h to 2216h	(Reserved)	-	-	(Inaccessible)	-
2217h	Multi-speed frequency 0, 2nd motor	A220	R/W	0 or "start frequency (b082)" to "maximum frequency, 2nd motor (A204)"	0.01 [Hz]
2218h to 223Ah	(Reserved)	-	-	(Inaccessible)	-
223Bh	Torque boost selection, 2nd motor	A241	R/W	0 (Manual torque boost), 1 (Automatic torque boost)	-
223Ch	Manual torque boost value, 2nd motor	A242	R/W	0 to 200	0.1 [%]
223Dh	Manual torque boost frequency, 2nd motor	A243	R/W	0 to 500	0.1 [%]
223Eh	V/F characteristic curve, 2nd motor	A244	R/W	0 (Constant torque), 1 (Reduced torque (1.7th power)), 2 (Free V/f)	-
223Fh	V/f gain, 2nd motor	A245	R/W	20 to 100	1 [%]
2240h	Voltage compensation gain for automatic torque boost, 2nd motor	A246	R/W	0 to 255	1 [%]
2241h	Slip compensation gain for automatic torque boost, 2nd motor	A247	R/W	0 to 255	1 [%]
2242h to 224Fh	(Reserved)	-	-	(Inaccessible)	-
2250h	Frequency upper limit, 2nd motor	A261	R/W	0 or "frequency lower limit, 2nd motor (A262)" to "maximum frequency, 2nd motor (A204)"	0.01 [Hz]
2251h	(Reserved)	-	-	(Inaccessible)	-
2252h	Frequency lower limit, 2nd motor	A262	R/W	0 or "start frequency (b082)" to "frequency upper limit, 2nd motor (A261)"	0.01 [Hz]
2253h to 2268h	(Reserved)	-	-	(Inaccessible)	-

Register No.	Function name	Function code	R/W	Monitoring and setting items	Data resolution
2269h	AVR function selection, 2nd motor	A281	R/W	0 (AVR enabled), 1 (AVR disabled), 2 (AVR enabled except during deceleration)	-
226Ah	AVR voltage selection, 2nd motor	A282	R/W	200 V class: 0 (200V), 1 (215V), 2 (220V), 3 (230V), 4 (240V), 400 V class: 5 (380V), 6 (400V), 7 (415V), 8 (440V), 9 (460V), 10 (480V)	-
226Bh to 226Eh	(Reserved)	-	-	(Inaccessible)	-
226Fh	Acceleration time (2), 2nd motor	A292 (high)	R/W	0 to 360000	0.01 [s]
2270h		A292 (low)	R/W		
2271h	Deceleration time (2), 2nd motor	A293 (high)	R/W	0 to 360000	0.01 [s]
2272h		A293 (low)	R/W		
2273h	Selection method to switch to Acc2/Dec2 profile, 2nd motor	A294	R/W	0 ([2CH] input from terminal), 1 (Transition frequency), 2 (Forward and reverse)	-
2274h	(Reserved)	-	-	(Inaccessible)	-
2275h	Acc1 to Acc2 frequency transition point, 2nd motor	A295	R/W	0 to 40000	0.01 [Hz]
2276h	(Reserved)	-	-	(Inaccessible)	-
2277h	Dec2 to Dec1 frequency transition point, 2nd motor	A296	R/W	0 to 40000	0.01 [Hz]
2278h to 230Bh	(Reserved)	-	-	(Inaccessible)	-
230Ch	Level of electronic thermal, 2nd motor	b212	R/W	2000 to 10000	0.01 [%]
230Dh	Electronic thermal characteristic, 2nd motor	b213	R/W	0 (Reduced torque), 1 (Constant torque), 2 (Free setting)	-
230Eh to 2315h	(Reserved)	-	-	(Inaccessible)	-
2316h	Overload restriction operation mode, 2nd motor	b221	R/W	0 (Disabled), 1 (Enabled during acceleration and constant speed operation), 2 (Enabled during constant speed operation only)	-
2317h	Overload restriction level, 2nd motor	b222	R/W	2000 to 20000	0.01 [%]
2318h	Deceleration rate at overload restriction, 2nd motor	b223	R/W	1 to 30000	0.1 [s]
2319h to 2428h	(Reserved)	-	-	(Inaccessible)	-
2429h	Overload warning level, 2nd motor	C241	R/W	0 to 20000	0.01 [%]
242Ah to 2502h	(Reserved)	-	-	(Inaccessible)	-
2503h	Motor capacity, 2nd motor *)	H203	R/W	0 (0.10kW) to 11 (5.50kW)	-
2504h	Motor poles setting, 2nd motor *)	H204	R/W	0 (2 poles) to 3 (8 poles)	-
2505,6h	(Reserved)	-	-	(Inaccessible)	-
2507h	Motor stabilization constant, 2nd motor *)	H206	R/W	0 to 255	1 [%]
2508h–	(Reserved)	-	-	(Inaccessible)	-

*) After changing the parameters, it is necessary to recalculate the internal variables. See Section "8.7 Re-calculate the internal variable".

Chapter 9 Error Codes

This chapter describes the error codes of the inverter, error indications by the functions, and troubleshooting methods.

9.1 Indication of the error ·····9 - 3

9.2 Error Codes and Troubleshooting ·····9 - 5

9.3 Warning Codes for Digital operator ·····9 - 7

9.4 Other Display for Digital operator·····9 - 8

(Memo)

9.1 Indication of the error

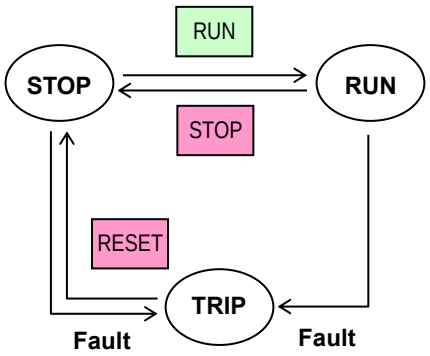

The microprocessor in the inverter detects a variety of fault conditions and captures the event, recording it in a history table. The inverter output turns off on “trips” similar to the way a circuit breaker trips due to an overcurrent condition. Most faults occur when the motor is running (refer to the diagram to the right). However, the inverter could have an internal fault and trip in stop mode.
In either case, the fault except some ones can be cleared by pressing the RESET key or turning ON the “RS” input terminal.

* How to remove the trip condition
a) Pressing the RUN/STOP/RESET key. (STOP/RESET key in the operator.)
b) Turning ON the intelligent input terminal assigned to reset (18: RS).
c) A power cycle of the inverter.
Note) By the factor of trip, it may not be canceled by a reset a),b). In this case, please go to c).

[Standard panel]

The ALARM LED (red) and RUN LED (green) of the standard panel show the trip condition as below list.

Error contents	LED Lighting, Blinking	
	ALARM LED	RUN LED
Overcurrent	Lighting	Blinking
Overvoltage Note2)	Blinking : Same period	Blinking : Same period
Undervoltage Note3)	Blinking : Alternation	Blinking : Alternation
Overload	Lighting	Lighting
Major failure Note1)	Lighting	Lights out
Others Note4)	Blinking	Lights out

Note1) The Major failure: Memory error, Current detection error, CPU error, Ground fault protection, Thermal detection error.

Note2) The blinking is a period for 1 sec. The condition of the blinking is same timing at ALARM LED and RUN LED. (At the time of the lighting, both ALARM LED and RUN LED turn on. At the time of lights out, both turn off.)

Note3) The blinking is a period for 1 sec. As for the condition of the blinking, ALARM LED and RUN LED repeat a flash in turn. (At the time of ALARM LED turning on, RUN LED turns off. At the time of ALARM LED turning off, RUN LED turns on.)

Note4) The other trips are Input overvoltage protection, Temperature error, Driver error, Output phase loss protection, Low-speed overload protection, Operator connection error (except NES1-OP), Modbus communication error and so on.

[Dedicated operator (NES1-OP)]

Trip History and Inverter Status

It is recommended to find the cause of the fault first before clearing it. When a fault occurs, the inverter stores important performance data at the moment of the fault. To access the data, use the monitor function (dxxx) and select d081 details about the present fault. The previous 5 faults are stored in d082 to d086. Each error shifts d081-d085 to d082-d086, and writes the new error to d081.

The following monitor menu map shows how to access the error codes. When fault(s) exist, you can review their details by selecting the trip history: d081 is the most recent, and d086 is the oldest.

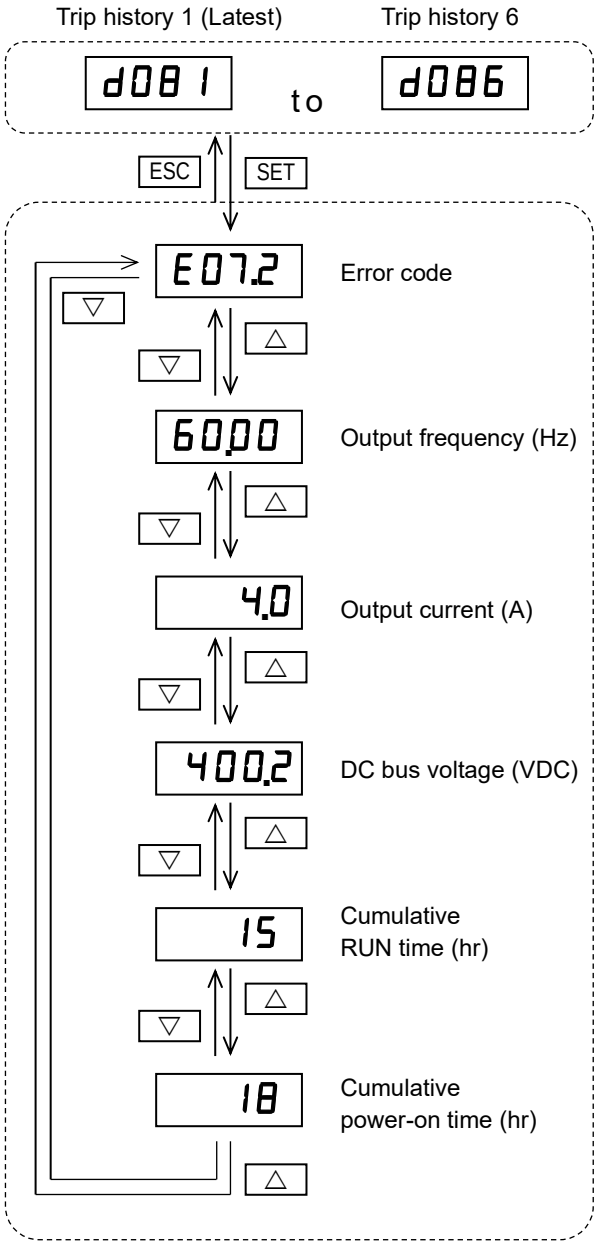

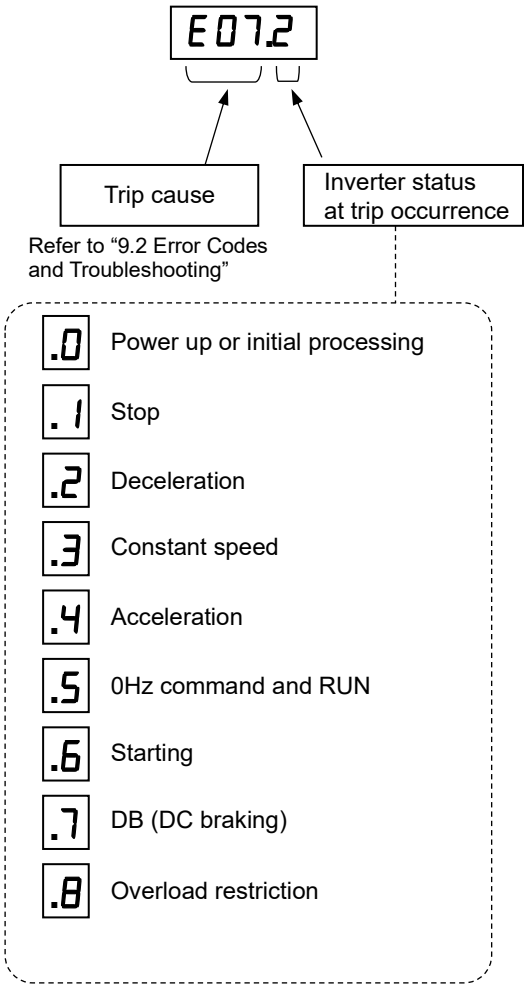

Note1: The above descriptions indicate the inverter status at the occurrence of tripping, which may not correspond to the apparent operation of the motor.

(Example)
When the PID control is used or the frequency command is input as an analog signal (voltage or current signal), the inverter may repeat acceleration and deceleration alternately at short intervals to make up for the fluctuations of the analog signal, even if the motor is apparently running at constant speed.
In such cases, the inverter status at the occurrence of tripping may not correspond to the apparent operation of the motor.

Note2: Detailed information of the trip that is occurred during undervoltage is not stored.

9.2 Error Codes and Troubleshooting

It is not displayed with the standard panel.

Name	Description		Display on digital operator	Troubleshooting and corrective action	Reference page
Overcurrent protection	If the motor is constrained or suddenly accelerated or decelerated, a high current will flow in the inverter and the inverter may fail. When a current as high as about 235 % (peak) of the inverter's rated output current is detected, the protective function operates and the inverter trips. (*4)(*5)	During constant speed	E01	Check whether the load has fluctuated sharply. (Eliminate the load fluctuation.) Check for the short circuit of output connections. (Check the output cables.) Check for the ground fault. (Check the output cables and motor.)	7 - 13 7 - 27
		During deceleration	E02	Check whether the inverter has decelerated the motor quickly. (Increase the deceleration time.)	
		During acceleration	E03	Check whether the inverter has accelerated the motor quickly. (Increase the acceleration time.) Check whether the motor has been locked. (Check the motor and wiring.) Check whether the torque boost voltage has been set too high. (Reduce the torque boost voltage.)	
		Others	E04	Check whether the DC braking force is too high. (Reduce the braking force.)	7 - 46
Overload protection (*1)	This protective function monitors the inverter output current, and shuts off the inverter output when the internal electronic thermal protection circuit detects a motor overload.		E05	Check whether the motor load is too high. (Check the motor load.) Check whether the thermal level is appropriate. (Adjust the level appropriately.)	7 - 67 7 - 69
Overvoltage protection	If the DC bus voltage rises too high, it may cause the inverter fault. To avoid this problem, the inverter will trip when the DC bus voltage exceeds a specified level *) because of an increase in the energy regenerated by the motor or the input voltage (during operation). *) About 400 VDC (200 V class) or about 800 VDC (400 V class)		E07	Check whether the inverter has decelerated the motor quickly. (Increase the deceleration time.) Check for a ground fault. (Check the output cables and motor.) Check whether the motor has been rotated by the action of the load. (Reduce the regenerative energy.)	7 - 13
Memory error (*2) (*3)	When the built-in memory is failed by external noise or an abnormal temperature rise, the inverter shuts off its output. Note: A Memory error may cause a CPU error.		E08	Check for the noise sources located near the inverter. (Remove noise sources.) Check whether the cooling efficiency has deteriorated. (Check the heatsink for clogging and clean it.) (Replace the cooling fan.)	-
Under voltage	If the inverter input voltage drops, the control circuit of the inverter cannot function normally. Therefore, the inverter shuts off its output when the input voltage falls below a specified level. The inverter will trip if the DC bus voltage falls below about 173 VDC (in case of the 200 V class models) or about 345 VDC (in case of the 400 V class models). When the inverter input voltage is recovered, depending on the undervoltage time (t0) and b002 setting, the following operation will occur. When b001 = 00: (t0 ≤ b002) -> E09 occur When b001≠00: (t0 > b002) -> E09 occur If t0 > 40 seconds, E09 will occur before the input voltage is recovered.		E09	Check whether the power supply voltage has dropped. (Check the power supply.) Check whether the power supply capacity is sufficient. (Check the power supply.)	-
Current detection error	If an error occurs in the internal current detector (CT), the inverter will shut off its output.		E10	Check whether the inverter has failed. (Repair the inverter.)	-
CPU error (*3)	If the internal CPU malfunctions or an error occurs in it, the inverter will shut off its output. Note: Reading an abnormal data from the built-in memory may result in a CPU error.		E11	Check for the noise sources located near the inverter. (Remove noise sources.) Check whether the inverter has failed. (Repair the inverter.)	-

*1 The inverter will not accept any reset command within about 10 seconds after tripping (i.e., after the overload protective function operates).

*2 The inverter will not accept any reset command after a Memory error occurs with error code "E08" displayed. Turn off the inverter power once. If error code "E08" is displayed when the inverter power is turned on subsequently, the internal memory device may have failed, or parameters may have not been stored correctly. In such cases, initialize the inverter, and then re-set the parameters (refer to section “7.9 Initializing”).

*3 The inverter will not accept reset commands input via the RS terminal or the STOP/RESET key or the Modbus communication. Therefore, turn off the inverter power.

*4 At the time of trip occurrence, as for the effective-value electric current with the measuring instrument and the current value of the trip history, a low value may be displayed by timing of the data sampling.

*5 When PM drive mode is selected, the overcurrent level can be changed by setting "H141" and "H142". The error level changes depending on the changed value.

Name	Description	Display on digital operator	Troubleshooting and corrective action	Reference page
External trip	External trip is detected when the intelligent input terminal set for external trip (12: EXT) is turned on.	E 12	Check whether an error has occurred in the external equipment when the external trip function has been enabled. (Recover the external equipment from the error.)	-
USP error	USP error is indicated when the inverter power is turned on with an input run command signal remaining in the inverter. (This protective function is enabled when the USP function is enabled.)	E 13	Check whether the inverter power has been turned on with an input run command signal remaining in the inverter when the USP function has been enabled. (Reset the run command, and then turn on the inverter power.)	7 - 63
Ground fault protection (*3)	When the inverter power is turned on, this protective function detects the ground fault between the inverter output circuit and the motor to protect the inverter. (This function does not operate when a residual voltage remains in the motor.)	E 14	Check for the ground fault. (Check the output cables and motor.) Check the inverter itself for abnormality. (Remove the output cables from the inverter, and then check the inverter.)	7 - 82 11 - 6
Input overvoltage protection	This protective function determines an error if the input voltage is kept above a protection level for 100 seconds while the inverter is stopped. The protection level is about 390 VDC (200 V class) or about 780 VDC (400 V class).	E 15	Check whether the input voltage is high while the inverter is stopped. (Lower the input voltage, suppress the power voltage fluctuation, or connect an AC reactor between the power supply and the inverter input.)	-
Thermal detection error	When the thermal sensor in the inverter module is not function.	E 19	Check whether the inverter has failed. (Repair the inverter.)	-
Temperature error	If the main circuit temperature rises because of a high ambient temperature or for other reasons, the inverter will shut off its output.	E 21	Check whether the inverter is installed vertically. (Check the installation.) Check whether the ambient temperature is high. (Lower the ambient temperature.) Check the heatsink for clogging. (Clean the heatsink.)	-
Driver error	If instantaneous overcurrent occurs, the main circuit element temperature is abnormal, or the main circuit element drive power drops, the inverter will shut off its output to protect the main circuit element. (After tripping because of this protective function, the inverter cannot retry the operation.)	E 30	Check the output circuit for a short circuit. (Check the output cables.) Check for the ground fault. (Check the output cables and motor.) Check the heatsink for clogging. (Clean the heatsink.)	5 - 9
Output phase loss protection	Output phase loss is detected when the output frequency is from 5 Hz to 100 Hz. This error may also occur if the output current is disturbed because of hunting of the motor.	E 34	Check for the output phase loss. (Check the cables and motor.) Check whether the inverter has failed. (Repair the inverter.)	7 - 82
Low-speed overload protection	If overload occurs during the motor operation at a very low speed, the electronic thermal protection circuit in the inverter will detect the overload and shut off its output. (Note that a high frequency may be recorded as the error history data.)	E 38	Check whether the motor load is too high. (Reduce the load factor.)	-
Step out error	When the PM motor mode is selected, if the motor steps out, rotation of the motor will not be detected while driving, inverter will shut off its output.	E 39	Check whether the motor load is too high. (Adjust the motor constant.) (Check the load conditions.) (Adjust acceleration / deceleration time.)	
Operator connection error	When the connection between inverter and operator failed, inverter trips and displays the error code.	E 40	Check the communication between inverter and operator. (Check the operator cable.) If "b165" is set to "02" or more, this error will not be detected.	-
Modbus communica-tion error	If timeout occurs because of line disconnection during the communication in Modbus-RTU mode, the inverter will trip according to the setting of communication error selection (C076).	E 41	Check whether the communication speed setting is correct. (Adjust the communication speed.) Check whether the wiring distance is appropriate. Check whether the wiring is disconnected. (Check the connections.)	8 - 6

*3 The inverter will not accept reset commands input via the RS terminal or the STOP/RESET key or the Modbus communication. Therefore, turn off the inverter power.

9.3 Warning Codes for Digital operator

The display of warning code for digital operator is follows.
It is not displayed with the standard panel.
The inverter displays a warning code when the data set as a target function code satisfies the condition (specified in the "Condition" column of the table below) in relation to the data set as the corresponding basic function code.

Warning code	Condition		
H001	Frequency upper limit (A061)	>	Maximum frequency (A004)
H002	Frequency lower limit (A062)	>	Maximum frequency (A004)
H005	Output frequency setting (F001), Multi-speed frequency 0 (A020) Note1)	>	Maximum frequency (A004)
H015	Output frequency setting (F001), Multi-speed frequency 0 (A020) Note1)	>	Frequency upper limit (A061)
H025	Frequency lower limit (A062)	>	Output frequency setting (F001), Multi-speed frequency 0 (A020) Note1)
H031	Start frequency (b082)	>	Frequency upper limit (A061)
H032	Start frequency (b082)	>	Frequency lower limit (A062)
H035	Start frequency (b082)	>	Output frequency setting (F001), Multi-speed frequency 0 (A020) Note1)
H037	Start frequency (b082)	>	Jog frequency (A038)
H085	Output frequency setting (F001), Multi-speed frequency 0 (A020) Note1)	=	"Jump frequency (center) 1/2/3" ± "Jump frequency width (hysteresis) 1/2/3" Note2) (A063 ± A064, A065 ± A066, A067 ± A068)
H086	Multi-speed frequency 1 to 7 (A021 to A027)	=	
H091	Free V/f setting, frequency 7 (b112)	<	Frequency upper limit (A061)
H092	Free V/f setting, frequency 7 (b112)	<	Frequency lower limit (A062)
H095	Free V/f setting, frequency 7 (b112)	<	Output frequency setting (F001), Multi-speed frequency 0 (A020) Note1)
H201	Frequency upper limit, 2nd motor (A261)	>	Maximum frequency, 2nd motor (A204)
H202	Frequency lower limit, 2nd motor (A262)	>	Maximum frequency, 2nd motor (A204)
H205	Output frequency setting (F001), Multi-speed frequency 0, 2nd motor (A220) Note1)	>	Maximum frequency, 2nd motor (A204)
H215	Output frequency setting (F001), Multi-speed frequency 0, 2nd motor (A220) Note1)	>	Frequency upper limit, 2nd motor (A261)
H225	Frequency lower limit, 2nd motor (A262)	>	Output frequency setting (F001), Multi-speed frequency 0, 2nd motor (A220) Note1)
H231	Start frequency (b082)	>	Frequency upper limit, 2nd motor (A261)
H232	Start frequency (b082)	>	Frequency lower limit, 2nd motor (A262)
H235	Start frequency (b082)	>	Output frequency setting (F001), Multi-speed frequency 0, 2nd motor (A220) Note1)
H285	Output frequency setting (F001), Multi-speed frequency 0, 2nd motor (A220) Note1)	=	"Jump frequency (center) 1/2/3" ± "Jump frequency width (hysteresis) 1/2/3" Note2) (A063 ± A064, A065 ± A066, A067 ± A068)
H291	Free V/f setting, frequency 7 (b112)	<	Frequency upper limit, 2nd motor (A261)
H292	Free V/f setting, frequency 7 (b112)	<	Frequency lower limit, 2nd motor (A262)
H295	Free V/f setting, frequency 7 (b112)	<	Output frequency setting (F001), Multi-speed frequency 0, 2nd motor (A220) Note1)

Note1) These parameters are checked, even when the operator (02) is not specified for the frequency source (A001/A201).
Note2) The warning will be occurred when the frequency setting (i.e., F001, A020, A220, A021 to A027) is in the jump frequency range.

9.4 Other Display for Digital operator

The other display for Digital operator is follows.
It is not displayed with the standard panel.

Name	Description	Display on digital operator
Reset	When RS input is ON or when STOP/RESET key is pressed during a trip is occurring.	Rotating SSSS
Waiting in undervoltage status	If the input voltage falls, the inverter will shut off its output, display the symbol shown on the right, and wait for the recovery of the input voltage. The inverter will display the same symbol also during an instantaneous power failure. (Remark) Inverter trips with undervoltage when this status continues for 40 seconds.	- - - -
Waiting for retry	When the retry after instantaneous power failure or tripping has been enabled, the inverter displays the symbol shown on the right while awaiting retry after an instantaneous power failure or tripping.	oooo
Power-off	The inverter displays the symbol shown on the right when the inverter power is turned off.	- - - -
Restricted operation command	When an operation direction has been restricted by the setting of rotation direction restriction (b035), the inverter will display the symbol shown on the right if the operation command specifying the restricted operation direction is input.	oooo
During Initialization for the parameter	Display during initialization for the parameter. In case of the initial data selection (b085) = 0. (mode 0) “I” is displayed for IM control mode and “P” is displayed for PM motor control mode.	', 00 Blinking alternately I or P
	Display during initialization for the parameter. In case of the initial data selection (b085) = 1. (mode 1) “I” is displayed for IM control mode and “P” is displayed for PM motor control mode.	', 01 Blinking alternately I or P
	Display during initialization for the parameter. In case of the initial data selection (b085) = 3. (mode 3) “I” is displayed for IM control mode and “P” is displayed for PM motor control mode.	', 03 Blinking alternately I or P
During Initialization for trip history	Display during initialization for the trip history.	', HC
Empty trip history	The trip history monitor displays the symbol shown on the right when there is no corresponding trip history data.	- - - -
Communication error	If a problem occurs in the communication between the digital operator and inverter, the inverter will display the symbol shown on the right.	Blinking - - - -

Chapter 10 Troubleshooting

This chapter describes the troubleshooting methods.

(Memo)

Troubleshooting Tips

The below tables list typical symptoms and the corresponding solution(s).

1. Inverter does not power up.

Possible Cause(s)	Corrective Action	Reference page
Power cable is incorrectly wired.	Check input wiring.	5 - 6 to 5 - 13
Short circuit bar or DCL option between [P] terminal and [PD] terminal is disconnected.	Install short circuit bar or DCL option between [P] terminal and [PD] terminal.	
Power cable is breaking.	Check input wiring.	
A normal voltage is not applied to terminal L1 and N terminal (single phase), R, S and T terminal (three phases circuit) to supply power to.	Apply a normal voltage to terminal L1 and N terminal (single phase), or R, S and T terminal (three phases circuit) to supply power to.	

2. Motor does not start.

Possible Cause(s)	Corrective Action	Reference page
Incorrect RUN command source is selected.	Check run command source (A002/A202) for correct source. Ex. Control terminal (digital input): 01 Operator (RUN key): 02	7 - 12
Incorrect frequency source is selected.	Check frequency source (A001/A201) for correct source. Ex. Control terminal (analog input): 01 Operator (F001): 02	7 - 9
Frequency setting is 0 Hz.	If frequency source is control terminal (A001/A201=01), check analog voltage or current signal at [O/OI] terminal.	5 - 6 to 5 - 8 7 - 9 to 7 - 11
	If frequency source is operator (A001/A201=02), set frequency in F001.	
	Depending on frequency source, input proper frequency reference.	
	If frequency source is multi-speed operation, set frequency in A020 to A027 and A220.	7 - 33
Run command source is not set to input terminal.	If run command source is control terminal (A002/A202=01), set "forward (00: FW)" or "reverse (01: RV)" to any intelligent input terminals. In case of 3-wire control, set "3-wire start" (20: STA), "3-wire stop" (21: STP) and "3-wire FW/RV" (22: F/R) to any intelligent input terminals.	7 - 17
“Multi-speed selection input(s) (02 to 04: CF1 to CF3, 32 to 34: SF1 to SF3)" is (are) set to intelligent input terminal(s) and the input is (are) active.	Deactivate the input(s). (Since multi-speed operation is performed when the multi-speed selection input(s) is (are) ON, operation does not occur if the corresponding multi-speed frequency (A021 to A027) is 0 Hz.)	7 - 33
Both "forward (00: FW)" and "reverse (01: RV)" inputs are active.	If run command source is control terminal (A002/A202=01), activate either "forward (00: FW)" or "reverse (01: RV)" input.	7 - 12
Rotation direction restriction (b035) is enabled.	Check whether b035 for correct setting.	7 - 12
Incorrect the intelligent input terminal wiring or the short circuit bar position.	Wire the intelligent input terminal correctly and/or install the short circuit bar correctly. (ON/OFF status of the intelligent input terminals are monitored in "d005".)	5 - 14
Incorrect analog input or variable resistor wiring.	Wire correctly. In case of analog voltage or variable resistor input, check voltage between [O/OI] and [L] terminal. In case of analog current, check current between current source and [O/OI] terminal.	5 - 6 to 5 - 8 7 - 21
Run command source is operator (A002/A202=02), but an intelligent input terminal is set to "Force terminal mode (51: F-TM)" and the input is active.	Deactivate the input.	7 - 51
RUN command source is control terminal (A002/A202=01), but an intelligent input terminal is set to "Operator control (31: OPE)" and the input is active.	Deactivate the input.	7 - 51
Inverter is in trip status. (Standard panel: ALARM LED and RUN LED are blinking or/and lighting. Digital operator: ALARM LED is lighting and "Exxx" indication is displaying.)	Reset inverter by STOP/RESET key or RS input or a power cycle of the inverter and check error code and cause. If the inverter cannot be reset, power OFF the inverter and make countermeasure of the error cause. After making countermeasure, power ON the inverter.	6 - 19, 7 - 66 9 - 3 to 9 - 6
"Reset (18: RS)" or "Free-run stop (11: FRS)" is set to intelligent input terminal and the input is active.	Deactivate the input.	7 - 60, 7 - 62

Possible Cause(s)	Corrective Action	Reference page
"Permission of run command (84: ROK)" is set to intelligent input terminal and the input is not active.	Activate the input.	7 - 32
Cable between inverter and motor, or internal cable of motor is breaking.	Check the wiring.	5 - 6 to 5 - 13
Excessive load is given.	Remove excessive load.	-
Motor is locked.	Unlock the motor.	-

3. Motor does not accelerate to command speed.

Possible Cause(s)	Corrective Action	Reference page
Bad connection of analog wiring.	Check the wiring. In case of analog voltage or variable resistor input, check voltage between [O/OI] terminal and [L] terminal. In case of analog current, check current between current source and [O/OI] terminal. Check and set the SW6 once again when the inverter is power-off.	5 - 6, 7 - 21
Overload restriction or OC suppression function works.	Deactivate the functions or check the function level.	7 - 69, 7-70
Maximum frequency (A004/A204) or frequency upper limit (A061/A261) is lower than as expected.	Adjust these parameters to proper.	7 - 16, 7 - 31
Acceleration time is excessive.	Shorten the acceleration time (F002/A092/A292).	7 - 13, 7 - 35
“Multi-speed selection input(s) (02 to 04: CF1 to CF3, 32 to 34: SF1 to SF3)” is (are) set to intelligent input terminal(s) and the input is (are) active.	Deactivate the input(s). (Since multi-speed operation is performed when the multi-speed selection input(s) is (are) ON, operation does not occur if the corresponding multi-speed frequency (A021 to A027) is 0 Hz.)	7 - 33
"Jogging (06: JG)" is set to input terminal and the input is active.	Deactivate the input.	7 - 30
Excessive load is given.	Remove excessive load.	-
Motor is locked.	Unlock the motor.	-

4. Inverter does not respond to changes in frequency setting "F001" display from operator.

Possible Cause(s)	Corrective Action	Reference page
Incorrect frequency source is selected.	Check whether the frequency source is operator (A001/A201=02).	7 - 9
"Force terminal mode (51: F-TM)" is set to intelligent input terminal and the input is active.	Deactivate the input.	7 - 51

5. A part of function codes is not displayed.

Possible Cause(s)	Corrective Action	Reference page
Function code display restriction (b037) is enabled.	Set "00 (full display)" to "b037".	7 - 52, 7 - 53
"Display limitation (86: DISP)" is set to intelligent input terminal and the input is active.	Deactivate the input.	

6. Operator does not respond.

Possible Cause(s)	Corrective Action	Reference page
"Display limitation (86: DISP)" is set to intelligent input terminal and the input is active.	Deactivate the input.	7 - 52

7. Parameter data does not change.

Possible Cause(s)	Corrective Action	Reference page
Inverter is in RUN status.	Stop the inverter, make sure that the motor stops, and then try again. Some parameters can be changed even RUN status by setting the high level access mode (b031=10).	-
Software lock mode selection (b031) is enabled.	- Disable software lock mode selection. - Turn off the input that is set to "Software lock (15: SFT)".	7 - 50

8. Motor rotates opposite direction to the command.

Possible Cause(s)	Corrective Action	Reference page
Incorrect wiring to motor.	Exchange any two of U/T1, V/T2 or W/T3 wirings.	5 - 6 to 5 - 13
Incorrect logic of direction signal in 3-wire operation.	Check the logic of intelligent input that is set as "FW/RV at 3-wire operation (22: F/R)".	7 - 28

9. Motor rotates opposite direction to the command with RUN key of the operator.

Possible Cause(s)	Corrective Action	Reference page
RUN key routing (F004) is incorrectly set.	Check whether "F004" for correct setting.	7 - 12

10. Overcurrent protection trip (E03) is occurred when motor is running.

Possible Cause(s)	Corrective Action	Reference page
Acceleration time is too short.	Extend acceleration time (F002/F202/A092/A292).	7 - 13, 7 - 35
	Enable acceleration hold function (A069, A070).	7 - 32
Excessive load is given.	Remove excessive load.	-
	Enable torque boost function.	7 - 27
	Set "free V/f" in V/f characteristic curve (A044/A244=02).	7 - 25
Overload restriction operation mode is disabled (b021/b221/b024=00).	Enable overload restriction (b021/b221/b024=01/02).	7 - 69

In case of the inverter trips due to Overcurrent (E03), even though overload restriction is enabled (b021/b221=01/02).

Overload restriction level (b022/b222/b025) is too high.	Set overload restriction level (b022/b222/b025) lower.	7 - 69
Deceleration rate at overload restriction (b023/b223/b026) is too short.	Set deceleration rate at overload restriction (b023/b223/b026) longer.	

11. STOP/RESET key does not respond.

Possible Cause(s)	Corrective Action	Reference page
STOP/RESET key is set to disabled.	Check STOP/RESET key enable (b087).	7 - 50
Deceleration overvoltage suppression enable (b130) function is enabled.	Deactivate the function or adjust the activation level of the function.	7 - 71
Controlled deceleration on power loss selection (b050) function is enabled.	Deactivate the function or adjust the activation level of the function.	7 - 64

12. Sound of motor or machine is noisy.

Possible Cause(s)	Corrective Action	Reference page
Carrier frequency is too low.	Set carrier frequency (b083) higher. (This could cause electric noise and leak current higher.)	7 - 16
Machine frequency and motor frequency are resonated.	Change output frequency slightly. If resonating is occurred, use jump frequency function (A063 to A068) to avoid machine resonant frequency.	7 - 31
Over excitation is occurred.	Set base frequency (A003/A203) and AVR voltage selection (A082/A282) according to motor rating. If not improved, reduce V/f gain (A045/A245) slightly or change V/f characteristic curve as free V/f (A044/A244=02).	7 - 14 7 - 39 7 - 25

13. Overload protection trip (E05) is occurred.

Possible Cause(s)	Corrective Action	Reference page
Electronic thermal level is improper.	Set electronic thermal level (b012/b212) proper.	7 - 67

14. Overvoltage protection trip (E07) is occurred.

Possible Cause(s)	Corrective Action	Reference page
Deceleration time is too short.	Extend deceleration time (F003/F203/A093/A293).	7 - 13, 7 - 35
Deceleration overvoltage suppression enable (b130) is disabled (00).	Enable deceleration overvoltage suppression enable (b130=01/02).	7 - 71

In case of the inverter trips due to overvoltage (E07), even though overvoltage suppression is enabled (b130=01/02).

Deceleration overvoltage suppression proportional gain (b133) or integral time (b134) is improper.	Set deceleration overvoltage suppression proportional gain (b133) and integral time (b134) proper.	7 - 71
Deceleration overvoltage suppression level (b131) is too high.	Set Deceleration overvoltage suppression level (b131) lower. (Lower limit of "b131" must be "(input voltage) × $\sqrt{2}$ × 1.1".)	

15. Output frequency is unstable.

Possible Cause(s)	Corrective Action	Reference page
Some parameters are improper.	Set output frequency slightly smaller or bigger value than power source frequency.	7 - 9
	Change motor stabilization constant (H006/H206).	7 - 44
	Reduce carrier frequency (b083).	7 - 16
	Reduce V/f gain (A045/A245).	7 - 39
Load variation is excessive.	Change motor and inverter to one size bigger.	-
Power voltage variation is excessive.	Check power source.	-

16. Output torque is not sufficient.

Possible Cause(s)	Corrective Action	Reference page
Some parameters are improper. [Acceleration]	Increase manual torque boost value (A042/A242) and/or manual torque boost frequency (A043/A243).	7 - 27
	Reduce carrier frequency (b083).	7 - 16
	Change torque boost selection to automatic (A041/A241=01).	7 - 27
Some parameters are improper. [Deceleration]	Extend deceleration time (F003/F203/A093/A293).	7 - 13, 7 - 35
	Disable AVR function (A081/A281=01/02).	7 - 14

17. When operator cable is disconnected, inverter will trip or stop.

Possible Cause(s)	Corrective Action	Reference page
Operation at external operator connection loss (b165) is improper.	Set Operation at external operator connection loss to ignore (b165=02).	7 - 51

18. No response over Modbus communication.

Possible Cause(s)	Corrective Action	Reference page
New parameter data is not updated.	If "C070", "C071", "C074" or "C075" is changed, cycle power.	8 - 6
Run command source (A002/A202) is incorrect.	Set run command source to Modbus network input (A002/A202=03) when RUN command is sent by Modbus communication.	7 - 12
Frequency source (A001/A201) is incorrect.	Set frequency source to Modbus network input (A001/A201=03).	7 - 9
Communication speed (C071) is incorrect.	Check communication speed (C071).	8 - 6
Modbus address (C072) is incorrect or duplication of Modbus address.	Check Modbus address (C072).	
Communication parity (C074) is incorrect.	Check communication parity (C074).	
Communication stop bit (C075) is incorrect.	Check communication stop bit (C075).	
Wiring is incorrect.	Check communication wiring at SP,SN via RJ45 connector.	8 - 4
The setting of switch SW5 on the board is on the operator side. (OFF, right side)	Set switch SW5 to RS485 side (ON, left side).	8 - 5

19. When inverter starts, ECB (Earth leakage Circuit Breaker) trips.

Possible Cause(s)	Corrective Action	Reference page
Leak current of inverter is excessive.	Reduce carrier frequency (b083).	7 - 16
	Increase current sensor level of ECB, or replace ECB with another one having higher current sensor level.	5 - 12, 5 - 13

20. DC braking does not work.

Possible Cause(s)	Corrective Action	Reference page
DC braking force for deceleration (A054) is set to "0".	Set DC braking force for deceleration (A054) proper.	7 - 46
DC braking time for deceleration (A055) is set to "0.0".	Set DC braking time for deceleration (A055) proper.	

21. Undervoltage trip (E09) is occurred.

Possible Cause(s)	Corrective Action	Reference page
Input voltage is decreased due to capacity shortage of electric source.	Make capacity of electric source larger.	-

22. TV or radio near inverter receives noises.

Possible Cause(s)	Corrective Action	Reference page
TV or radio catches the radiation noise generated by the inverter.	Put away those devices from the inverter as far as possible.	-
	Insert ZCL into the main power input line and inverter output line to the motor.	5 - 12

23. Remote operator becomes a communication error.

Possible Cause(s)	Corrective Action	Reference page
The cable and connectors are poor contact. The cable has disconnection.	Reconnect the cable. Replace the cable.	-
SW5 has become RS485 side (ON, left side).	Set SW5 to operator side (OFF, right side).	3 - 4, 5 - 8
Selection of OPE/Modbus has become Modbus (C070=01).	Press the RUN/STOP/RESET key on the standard panel (hold down the key for about 5 seconds after turning on the power), then set the selection of OPE/Modbus (C070) to 00 (OPE). After that, it is necessary to shut off and turn on the power once.	8 - 5

24. NES1-OP display does not light up or is not normal display.

Possible Cause(s)	Corrective Action	Reference page
Inverter connector and NES1-OP are poor contact.	Reconnect the NES1-OP after power-off.	5 - 5

25. Output phase loss protection (E34) is occurred.

Possible Cause(s)	Corrective Action	Reference page
Motor cable is disconnected or not connected.	Check the wiring.	5 - 6 to 5 - 13
Motor current is too small.	Set output phase loss detection to disabled (C157=00).	7 - 82

Chapter 11 Maintenance and Inspection

This chapter describes the precautions and procedures for the maintenance and inspection of the inverter.

11.1 Precautions for Maintenance and Inspection ····· 11 - 3

11.2 Daily and Periodic Inspections ····· 11 - 4

11.3 Ground Resistance Test with a Megger ····· 11 - 5

11.4 Withstand Voltage Test ····· 11 - 5

11.5 Methods of Measuring the Input/Output Voltages, Current, and Power ····· 11 - 6

11.6 Capacitor Life Curves ····· 11 - 7

(Memo)

11.1 Precautions for Maintenance and Inspection

WARNING

- Before inspecting the inverter, be sure to turn off the power supply and wait for 10 minutes or more. Otherwise, you run the risk of electric shock.
  (Before inspection, confirm that the Charge lamp on the inverter is off.)
  In case the power indication of the operator does not turn ON after power-up, inverter may be damaged. In that case, the inspection must be done after waiting 2 hours or more of the power OFF. Otherwise, there is a danger of electric shock and/or injury.
- Commit only a designated person to maintenance, inspection, and the replacement of parts.
  (Be sure to remove wristwatches and metal accessories, e.g., bracelets, before maintenance and inspection work and to use insulated tools for the work.) Otherwise, you run the risk of electric shock and injury.
- Never modify the inverter. Otherwise, you run the risk of electric shock and injury.

(A) Daily inspection
Basically, check your system during the inverter operation to confirm that:
1) the motor is operating according to the settings on the inverter,
2) the installation environment is normal,
3) the cooling system is normal,
4) no abnormal vibrations and noise are generated,
5) no equipment overheating and discoloration are found, and
6) there are no unusual smells.

While the inverter is operating, measure the inverter input power voltage with a multimeter to confirm that:
1) the power supply voltage does not fluctuate often
2) the voltages between the power supply wires are balanced.

(B) Cleaning
Always keep the inverter clean. When cleaning the inverter, wipe off dirt and stains on the inverter surface lightly with a soft cloth dipped in a neutral detergent solution.

Note:
Do not use solvents such as acetone, benzene, toluene, and alcohol for cleaning. These solvents cause the inverter surface to dissolve or the coating on the surface to peel off. In particular, never use a detergent or alcohol to clean the monitor of the digital operator.

(C) Periodic inspection
Check those inverter sections and parts which are accessible only while the inverter is power off and which should be inspected regularly. When you intend to carry out a periodic inspection, contact your local Hitachi Distributor.

During a periodic inspection, perform the following:
1) Check that the cooling system is normal. Clean the air filter as needed.
2) Check the screws and bolts for tightness and retighten them. Screws and bolts may have loosened because of vibrations and temperature changes. Check them carefully.
3) Check to ensure conductors and insulators are not corroded or damaged.
4) Measure the dielectric breakdown voltage of insulators.
5) Check the cooling fan, DC bus capacitors, and relays, and replace them if necessary.

11.2 Daily and Periodic Inspections

Item Inspected		Check for…	Inspection Cycle		Inspection Method	Criteria
			Daily	Year		
Overall	Ambient environment	Extreme temperatures & humidity	✓		Thermometer, hygrometer	Ambient temperature between -10 to 50°C, Humidity 90 % or less non-condensing
	Major devices	Abnormal noise & vibration	✓		Visual and aural	Stable environment for electronic controls
	Power supply voltage	Voltage tolerance	✓		Digital voltmeter, measure between inverter terminals [L1], [L2], [L3]	200 V class: 50/60 Hz 200 to 240 V (-15/+10 %) 400 V class: 50/60 Hz 380 to 480 V (-15/+10 %)
Main circuit	Ground Insulation	Adequate resistance		✓	Refer to next page	5 MΩ or greater
	Ground terminal	No loose screws		✓	Torque wrench	M4: 0.8 N· m
	Components	Overheating		✓	Thermal trip events	No trip events
	Terminal block	Secure connections		✓	Visual	No abnormalities
		No loose screws		✓	Torque wrench	M3.5: 1.0 N· m M4: 1.5 N· m
	DC bus capacitors	Leaking, swelling		✓	Visual	No abnormalities
	Relay(s)	Chattering		✓	Aural	Single click when switching ON or OFF
	Resistors	Cracks or discoloring		✓	Visual	No abnormalities
Control circuit	Function	Voltage balance between phases		✓	Measure voltage between U,V,W	Difference must be 2 % or less.
		Protection circuit		✓	e.g. Input Ex.trip signal and check inverter behavior and alarm signal.	Functions properly.
	Overall	No odor, discoloring, corrosion		✓	Visual	No abnormalities
	Capacitor	Leaking, swelling		✓	Visual	Undistorted appearance
	Terminal	No loose screws		✓	Torque wrench	M2: 0.2 N· m
Cooling	Cooling fan	Noise	✓		Power down, manually rotate	Rotation must be smooth
		Dust		✓	Visual	Vacuum to clean
		Mounting		✓	Visual	Mounted firmly
	Heat sink	Dust		✓	Visual	Vacuum to clean
Display	LEDs	Legibility	✓		Visual	All LED work

Note 1: The life of DC bus capacitors is affected by the ambient temperature. Refer to section “11.6 Capacitor Life Curves”.

Note 2: Designed life of a cooling fan is 10 years. However, it is affected by the ambient temperature and other environmental conditions.

Note 3: The inverter must be cleaned periodically. If dust accumulates on the fan and heatsink, it can cause overheating of the inverter.

Note 4: Do not pull the cooling FAN’s wire, otherwise cooling FAN might cut the wires and cause failure.

11.3 Ground Resistance Test with a Megger

When testing an external circuit with a megger, disconnect all the external circuit cables from the inverter to prevent it from being exposed to the test voltage.
Use a tester (in high-resistance range mode) for a conduction test on the control circuit. Do not use a megger or buzzer for that purpose.
Apply the ground resistance test using a megger only to the main circuit of the inverter. Do not carry out the test using a megger for its control circuit.
Use a 500 VDC megger for the ground resistance test.
Before the main circuit test with a megger, and then connect terminals R/L1, S/L2, T/L3, U/T1, V/T2, W/T3, P/+ and PD/+1 by wires as shown in the figure below. Subsequently, carry out the test.
After the test using the megger, remove the wires from terminals R/L1, S/L2, T/L3, U/T1, V/T2, W/T3, P/+ and PD/+1. (Single phase input model is R/L1, S/L2, T/L3, U/T1, V/T2, W/T3, P/+ and PD/+1)

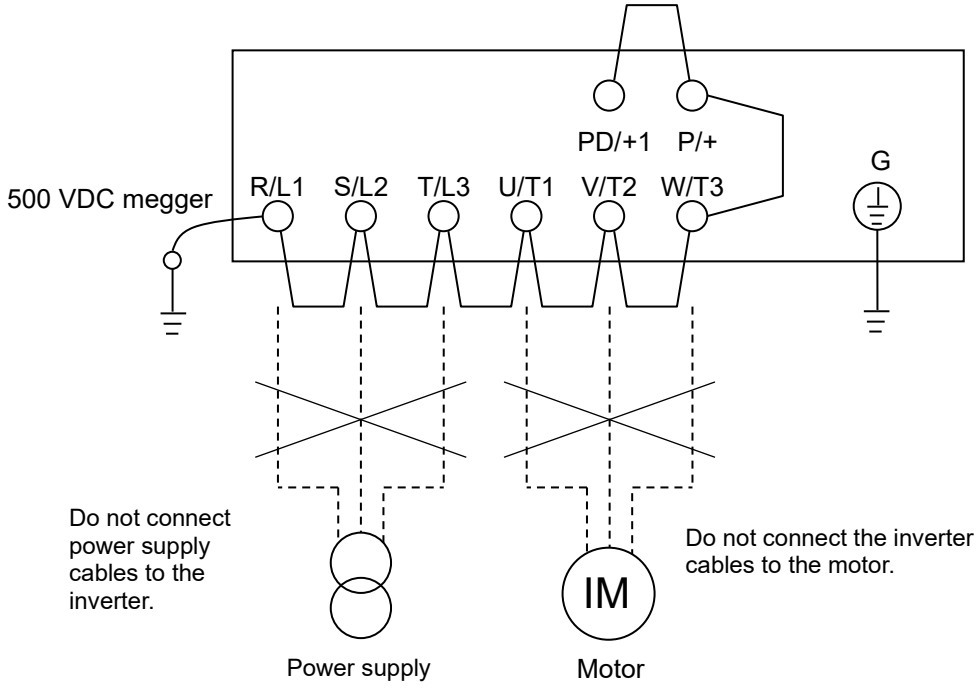

11.4 Withstand Voltage Test

Do not carry out a withstand voltage test for the inverter. The test may damage its internal parts or cause them to deteriorate.

11.5 Methods of Measuring the Input/Output Voltages, Current, and Power

This section describes the measuring instruments generally used to measure the input and output voltages, output current, and output power of the inverter.

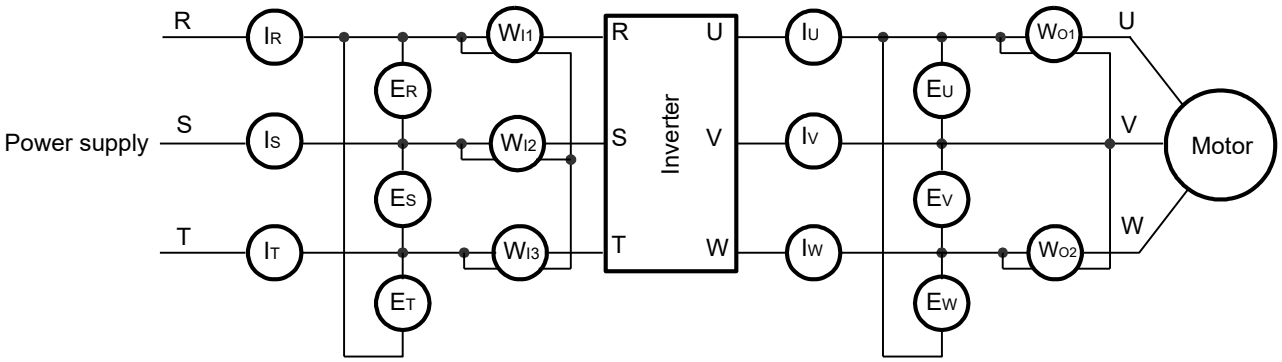

Measurement item	Measuring point	Measuring instrument	Remarks	Reference values
Input voltage (E_{IN})	Across R-S, S-T, and T-R (E_R), (E_S), and (E_T)	Moving-iron voltmeter or rectifier-type voltmeter	Effective value of full waves	200 V class models: 200 to 240 V, 50/60 Hz 400 V class 380 to 480 V, 50/60 Hz
Input current (I_{IN})	Current at R, S, and T (I_R), (I_S), and (I_T)	Moving-iron ammeter	Effective value of full waves	When input currents are unbalanced $I_{IN} = (I_R + I_S + I_T)/3$
Input power (W_{IN})	Across R-S, S-T, and T-R (W_{11}) + (W_{12}) + (W_{13})	Electrodynamometer-type wattmeter	Effective value of full waves	3-wattmeter method
Input power factor (Pf_{IN})	Calculated from the measured input voltage (E_{IN}), input current (I_{IN}), and input power (W_{IN}) $Pf_{IN} = \frac{W_{IN}}{\sqrt{3} \cdot E_{IN} \cdot I_{IN}} \times 100$ (%)			
Output voltage (E_{OUT})	Across U-V, V-W, and W-U (E_U), (E_V), and (E_W)	Method shown in the figure below or rectifier-type voltmeter	Effective value of fundamental wave	
Output current (I_{OUT})	Current at U, V, and W (I_U), (I_V), and (I_W)	Moving-iron ammeter	Effective value of full waves	
Output power (W_{OUT})	Across U-V and V-W (W_{01}) + (W_{02})	Electrodynamometer-type wattmeter	Effective value of full waves	2-wattmeter method (or 3-wattmeter method)
Output power factor (Pf_{OUT})	Calculated from the measured input voltage (E_{OUT}), input current (I_{OUT}), and input power (W_{OUT}) $Pf_{OUT} = \frac{W_{OUT}}{\sqrt{3} \cdot E_{OUT} \cdot I_{OUT}} \times 100$ (%)			

Notes:

1. To measure the output voltage, use an instrument that reads the effective value of the fundamental wave. To measure the current or power, use an instrument that reads the effective value of full waves.
2. Since the inverter output waveform is controlled by PWM, it has a large margin of error, especially at low frequencies. In many cases, general multimeter may be inapplicable for the measurement because of the adverse effect of noise.

Method to measure the output voltage

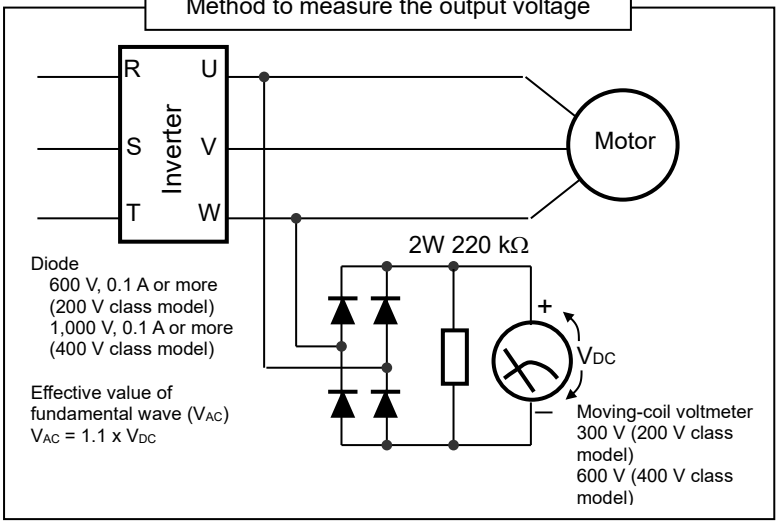

11.6 Capacitor Life Curves

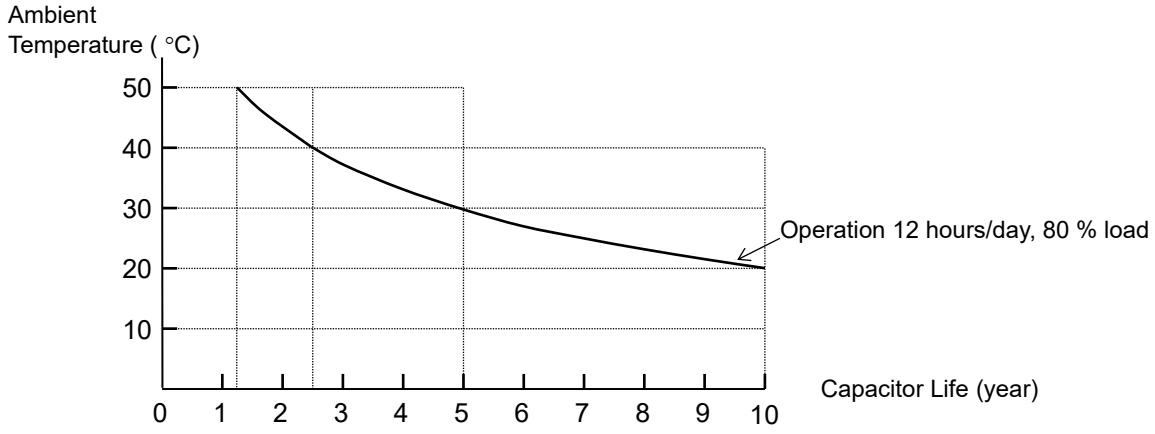

Capacitor Life

Note 1: The ambient temperature indicates the temperature measured at a position about 5 cm distant from the bottom center of the inverter body. If the inverter is mounted in an enclosure, the ambient temperature is the temperature within the enclosure.

Note 2: Inverter has a limited life because chemical reactions occur inside the DC bus capacitor during operation. The capacitor Life is the above curve. (The curve is not the guaranteed lifespan but rather, the expected design lifespan.)
Note that the DC bus capacitor life will be shortened significantly if the inverter is used at a high ambient temperature or with a heavy load that requires a current beyond its rated current.

Warranty

Warranty Terms

The warranty period under normal installation and handling conditions shall be two (2) years from the date of manufacture, or one (1) year from the date of installation, whichever occurs first. The warranty shall cover the repair or replacement, at Hitachi's sole discretion, of ONLY the inverter that was installed.

1. Service in the following cases, even within the warranty period, shall be charged to the purchaser:

- **a.** Malfunction or damage caused by mis-operation or modification or improper repair
- **b.** Malfunction or damage caused by a drop after purchase and transportation
- **c.** Malfunction or damage caused by fire, earthquake, flood, lightening, abnormal input voltage, contamination, or other natural disasters

2. When service is required for the product at your work site, all expenses associated with field repair shall be charged to the purchaser.

3. Always keep this Quick Reference Guide handy; please do not lose it. Please contact your Hitachi distributor to acquire replacement or additional manuals.

Chapter 12 Specifications

This chapter describes the specifications and external dimensions of the inverter.

12.1 Specifications ..... 12 - 3

12.2 Dimensions..... 12 - 5

12.3 Derating Curves ..... 12 - 7

(Memo)

12.1 Specifications

200 V Class

Item		Three phases 200 V class Specifications					Single phase 200 V class Specifications				
NE-S1 inverters, 200 V models Note8)		002L*	004L*	007L*	015L*	022L*	002S*	004S*	007S*	015S*	022S*
Applicable motor size Note1)	kW	0.2	0.4	0.75	1.5	2.2	0.2	0.4	0.75	1.5	2.2
	HP	1/4	1/2	1	2	3	1/4	1/2	1	2	3
Rated capacity (kVA)	200V	0.4	0.9	1.3	2.4	3.4	0.4	0.9	1.3	2.4	3.4
	240V	0.5	1.0	1.6	2.9	4.1	0.5	1.0	1.6	2.9	4.1
Rated input voltage		Three phases: 200 V-15 % to 240 V+10 %, 50/60 Hz ± 5 %					Single phase: 200 V-15 % to 240 V+10 %, 50/60 Hz ±5 %				
Rated output voltage Note2)		Three phases: 200 V to 240 V (proportional to input voltage)									
Rated output current (A)		1.4	2.6	4.0	7.1	10.0	1.4	2.6	4.0	7.1	10.0
Cooling method		Self-cooling			Force ventilation		Self-cooling			Force ventilation	
Braking (capacitive feedback) Note3)		Approx. 50 %			Approx. 20 to 40 %		Approx. 50 %			Approx. 20 to 40 %	
Weight	(kg)	0.7	0.8	0.9	1.2	1.3	0.7	0.8	1.0	1.2	1.3
	(lb)	1.6	1.8	2.0	2.7	2.9	1.6	1.8	2.2	2.7	2.9

400 V Class

Item		Three phases 400 V class Specifications				
NE-S1 inverters, 400 V models Note8)		004H*	007H*	015H*	022H*	040H*
Applicable motor size Note1)	kW	0.4	0.75	1.5	2.2	4.0
	HP	1/2	1	2	3	5
Rated capacity (kVA)	380 V	0.9	1.6	2.6	3.6	6.0
	480 V	1.2	2.0	3.4	4.5	7.6
Rated input voltage		Three phases: 380 V-15 % to 480 V +10 %, 50/60 Hz ±5 %				
Rated output voltage Note2)		Three phases: 380 V to 480 V (proportional to input voltage)				
Rated output current (A)		1.5	2.5	4.1	5.5	9.2
Cooling method		Self-cooling	Force ventilation			
Braking (capacitive feedback) Note3)		Approx. 50 %		Approx. 20 to 40 %		
Weight	(kg)	0.9	0.9	1.0	1.1	1.2
	(lb)	2.0	2.0	2.2	2.4	2.7

Common specification

Item		Specification
Protective housing (JIS C 0920, IEC60529)		IP20 / UL Open type
Control	Control method	Pulse Width Modulation (PWM) control
	Output frequency range Note4)	0.01 to 400.00 Hz
	Frequency accuracy Note5)	Digital command: ±0.01 % of the maximum frequency Analog command: ±0.2 % of the maximum frequency (25°C ± 10°C)
	Frequency setting resolution	Digital input: 0.01 Hz Analog input: Maximum output frequency / 1000
	Volt. / Freq. characteristic	V/f control (constant torque, reduced torque), PM sensorless vector control
	Overload capacity	150 % / 60 seconds
	Acceleration/deceleration time	0.00 to 3,600.00 seconds (in linear or curved pattern)、2nd motors setting is possible
Input signal	Frequency setting	External signal: adjustable resistor / 0 to +10 VDC / 0 to 20 mA, Modbus, Option operator, Dedicated operator
	RUN/STOP Order	External digital input signal (3-wire input possible), Modbus communication, Option Operator, Dedicated Operator
	Intelligent input terminal	5 terminals
	Analog input	1 terminal (O/OI terminal: Voltage input 10 bit / 0 to 10 VDC, Current input: 10 bit / 0 to 20 mA selecting it with a changeover switch)
Output signal	Intelligent output terminal	1 open-collector output terminals, 1 relay (1c-contact) output terminal
	Pulse Output	1 terminal
connection	RS-422 Note7)	RJ45 Connector (Common with RS485: selecting it with a changeover switch) For Option Operator, Inverter setting software (ProDriveNext)
	RS-485 Note7)	RJ45 Connector (Common with RS422: selecting it with a changeover switch) For Modbus-RTU
General specification	Temperature Note6)	Operating (ambient): -10 to 50°C / Storage: -20 to 65°C The storage temperature refers to the short-term temperature during transport.
	Humidity	20 to 90 % humidity (non-condensing)
	Vibration	5.9 m/s^2 (0.6 G), 10 to 55 Hz
	Location	Altitude 1,000 m or less, indoors (no corrosive gasses or dust)
	Standards Compliance	UL, CE, c-UL, c-tick

Note1) The applicable motor refers to Hitachi standard three phases motor (4-pole). When using other motors, care must be taken to prevent the rated motor current (50/60 Hz) from exceeding the rated output current of the inverter.
Note2) The output voltage decreases as the main supply voltage decreases (except when using the AVR function). In any case, the output voltage cannot exceed the input power supply voltage.
Note3) The regenerative braking torque is the average deceleration torque at the shortest deceleration (stopping from 50/60 Hz as indicated). It is not continuous regenerative braking torque. The average deceleration torque varies with motor loss. This value decreases when operating beyond 50 Hz.
Note4) To operate the motor beyond 50/60 Hz, consult the motor manufacturer for the maximum allowable rotation speed.
Note5) To get motor stabilized operation, inverter output frequency might exceed preset maximum frequency (A004/A204).
Note6) Derating curve is shown on section "12.3 Derating Curves".
Note7) Connecting work on RS422/RS485 port must be done during the inverter power off.
Note8) "*" changes by Restricted Distribution. For more detail, refer to section "2.1 Inspection of the Purchased Product".

12.2 Dimensions

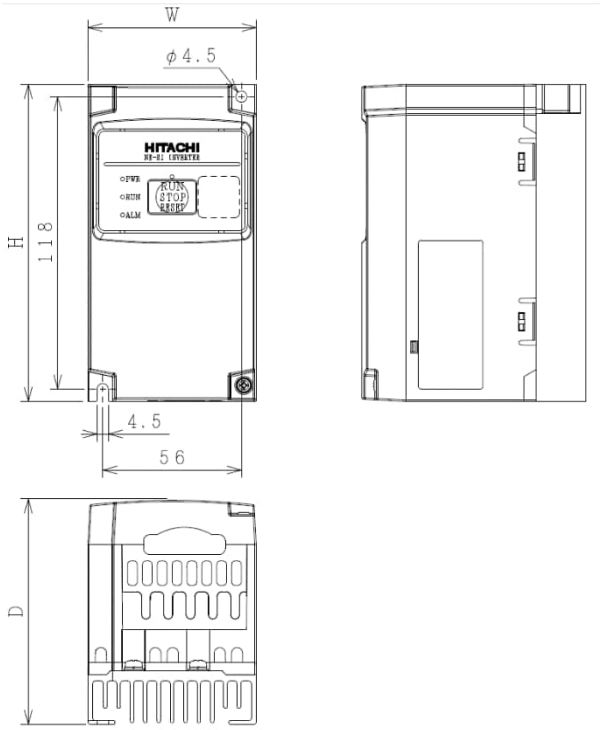

Model Note)	W (mm)	H (mm)	D (mm)
NES1-002SB*	68	128	76
NES1-004SB*			91
NES1-002LB*			76
NES1-004LB*			91
NES1-007LB*			115

Note) "*" changes by Restricted Distribution.

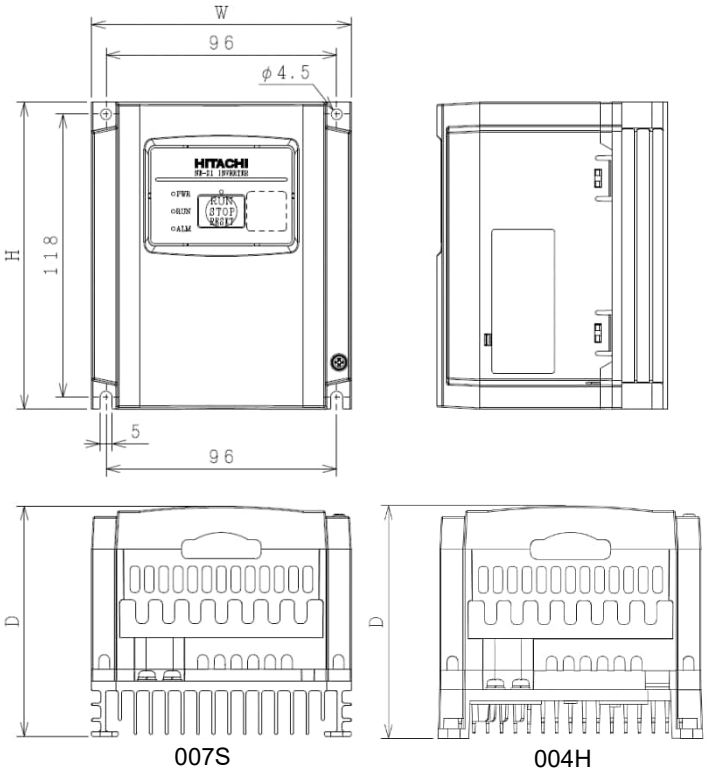

007S 004H

Model Note)	W (mm)	H (mm)	D (mm)
NES1-007SB*	108	128	96
NES1-004HB*			

Note) "*" changes by Restricted Distribution.

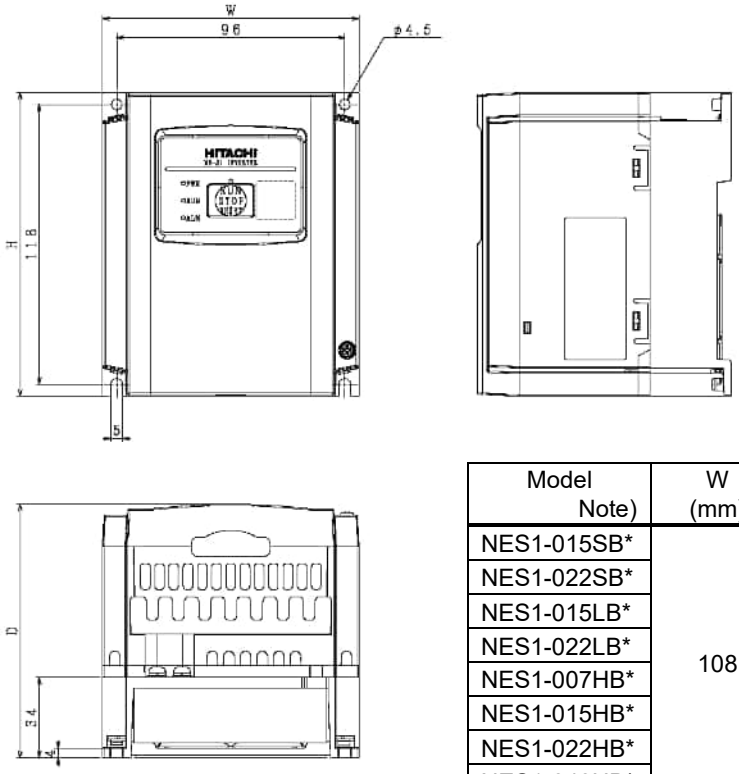

Model Note)	W (mm)	H (mm)	D (mm)
NES1-015SB*	108	128	107
NES1-022SB*			125
NES1-015LB*			107
NES1-022LB*			125
NES1-007HB*			96
NES1-015HB*			111
NES1-022HB*			125
NES1-040HB*			135

Note) "*" changes by Restricted Distribution.

12.3 Derating Curves

Use the following derating curves to help determine the optimal carrier frequency setting for your inverter and find the output current derating. Be sure to use the proper curve for your particular NE-S1 inverter model number.

In case that the region code is the European or Chinese version, check the notice of after August 2012.

Legend for Graphs:

- Ambient temperature 30℃ max.
- Ambient temperature 40℃ max.
- Ambient temperature 50℃ max.
- Rated output current (A)

Production: after August 2012

NES1-002LB

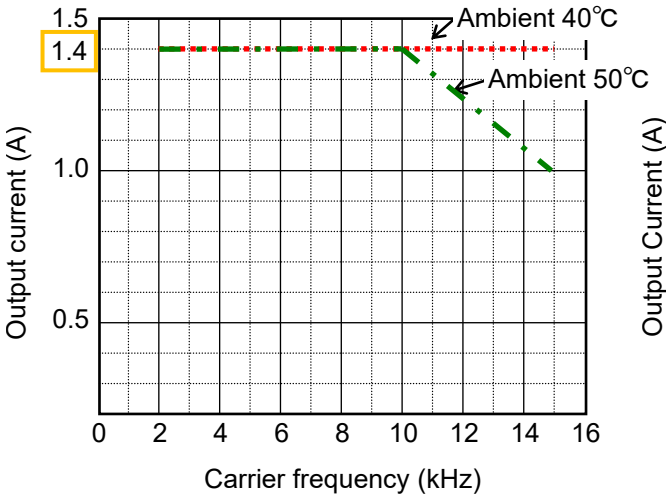

NES1-002SB

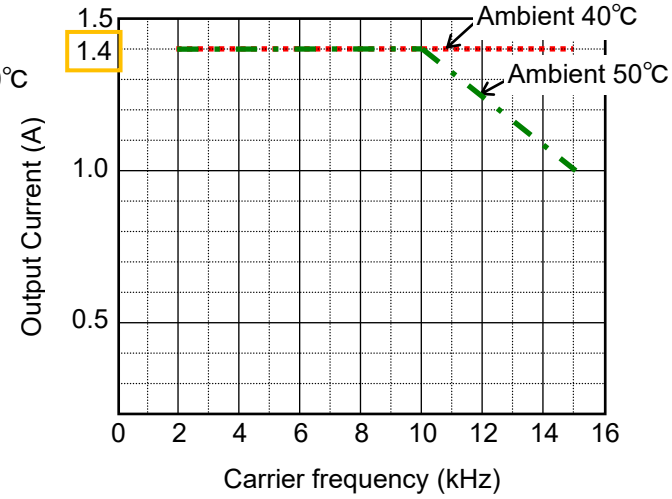

NES1-004LB

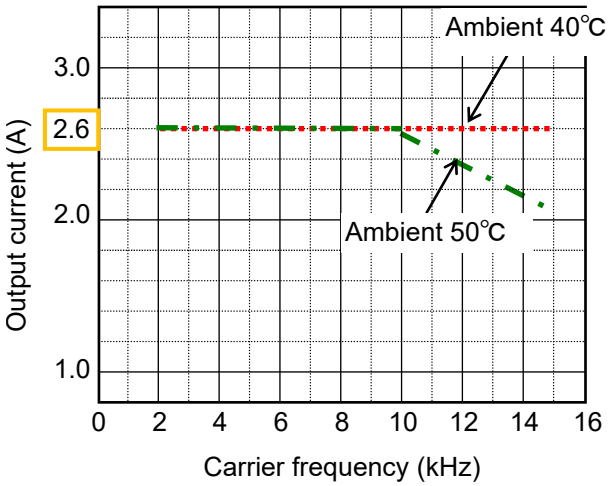

NES1-004SB

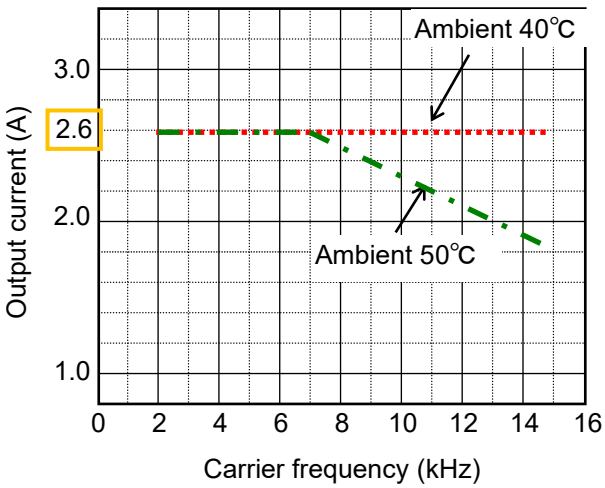

NES1-007LB

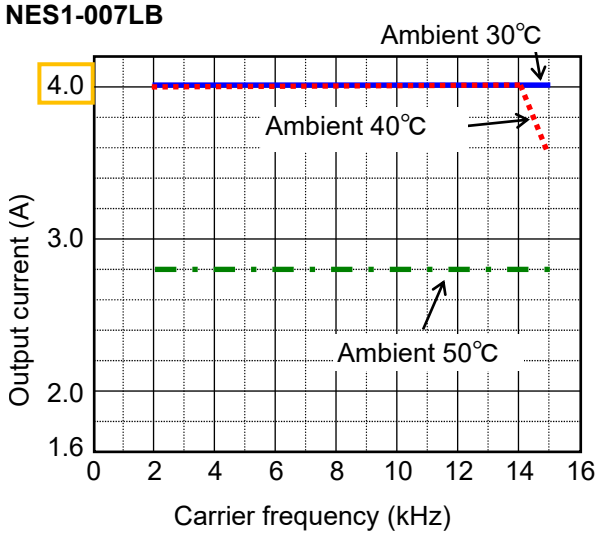

NES1-007SB

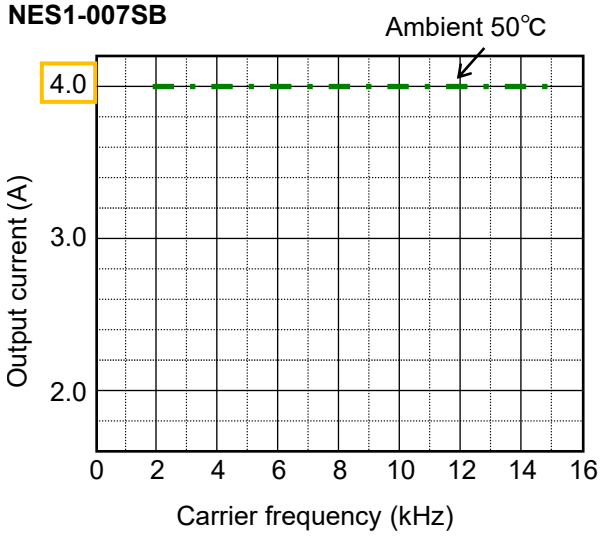

NES1-015LB

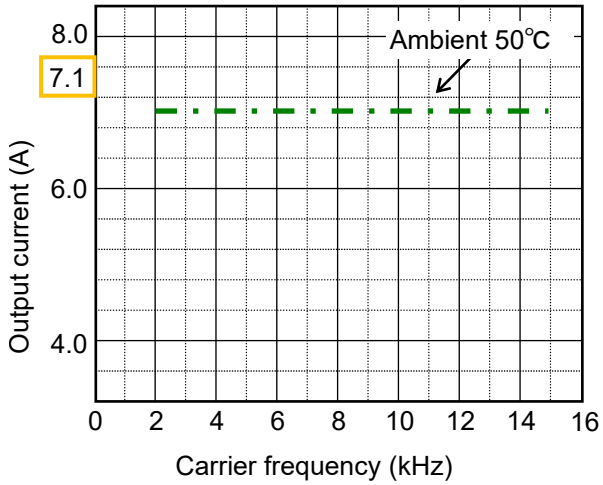

NES1-015SB

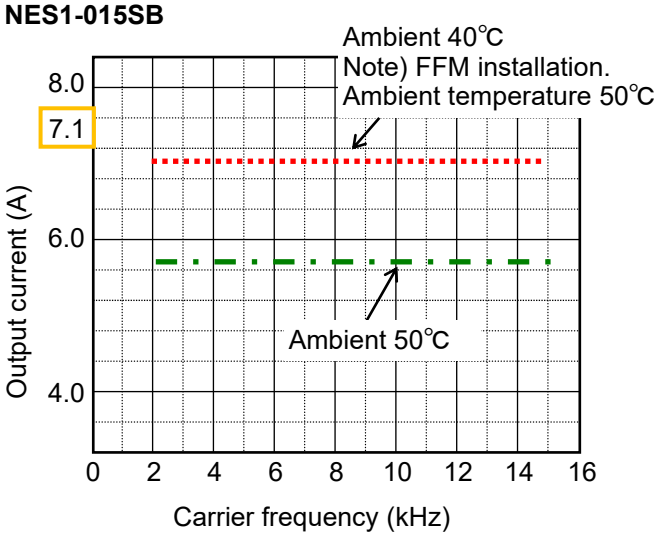

NES1-022LB

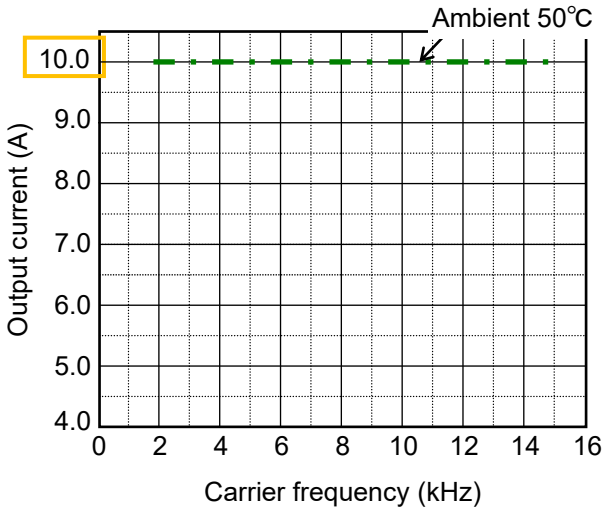

NES1-022SB

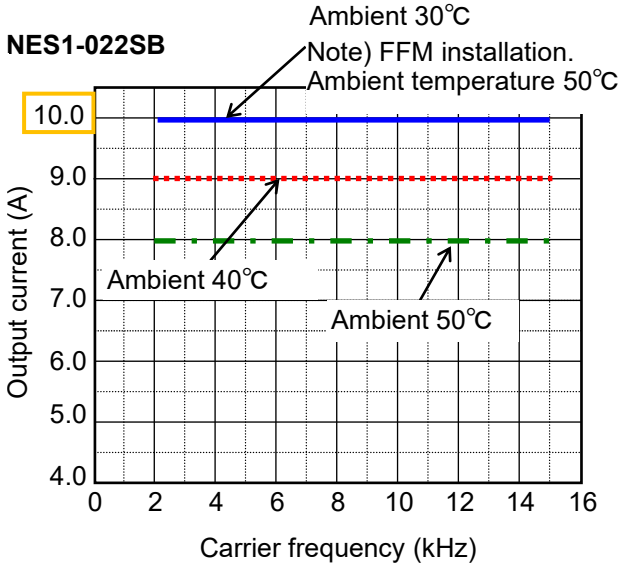

Note) “FFM installation. Ambient temperature 50℃” shows that attaching FFM becomes derating-free.

NES1-004HB

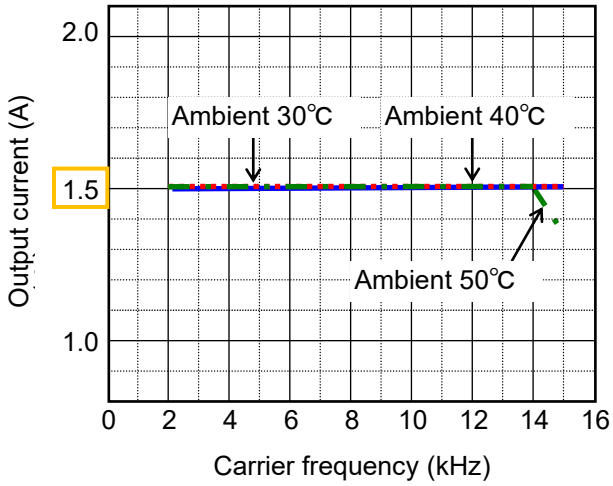

NES1-040HB

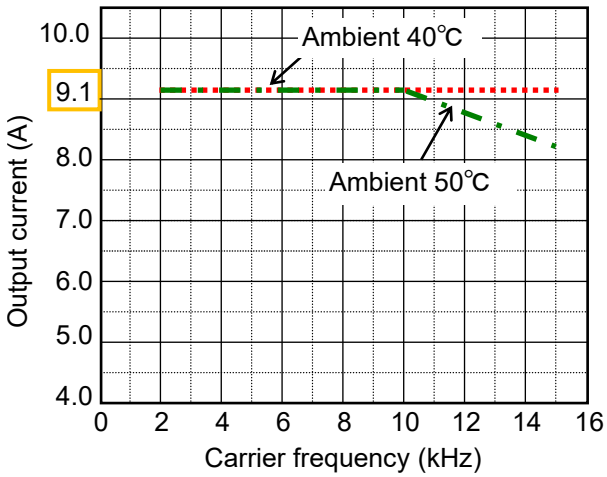

Note) NES1-007 to 022HB is not necessary for the derating.

Production: before July 2012

NES1-002LB

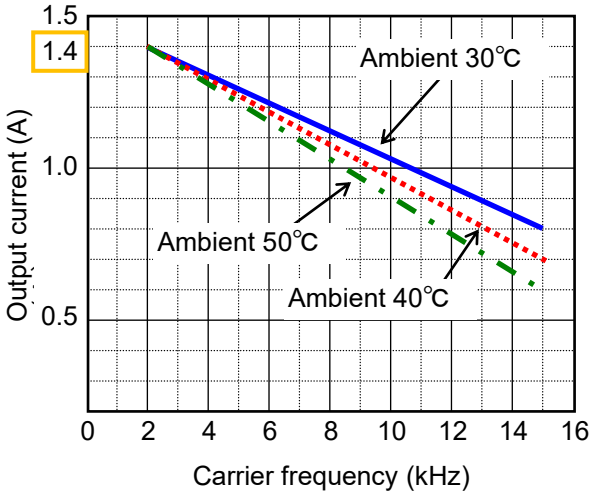

NES1-002SB

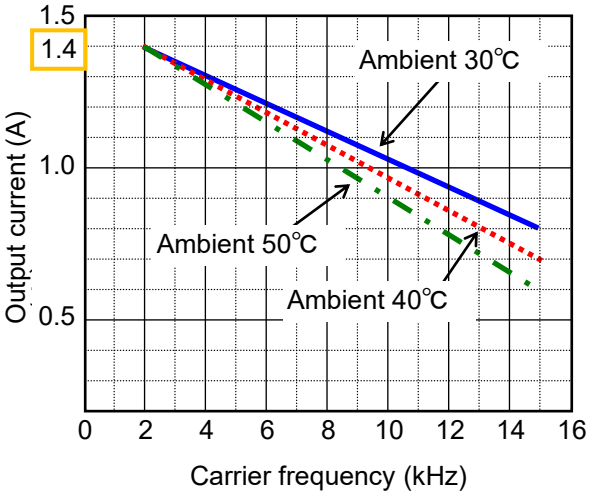

NES1-004LB

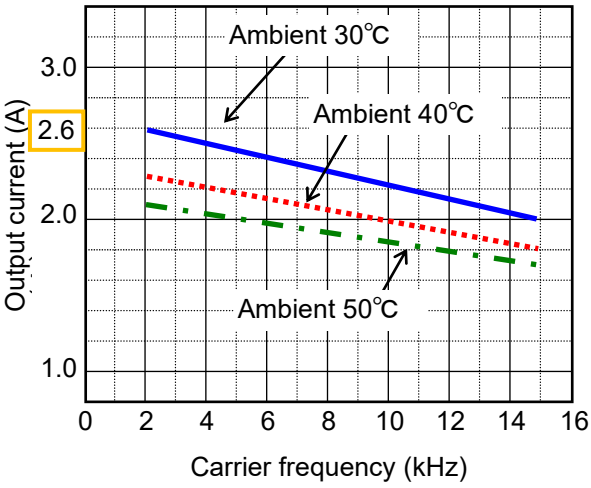

NES1-004SB

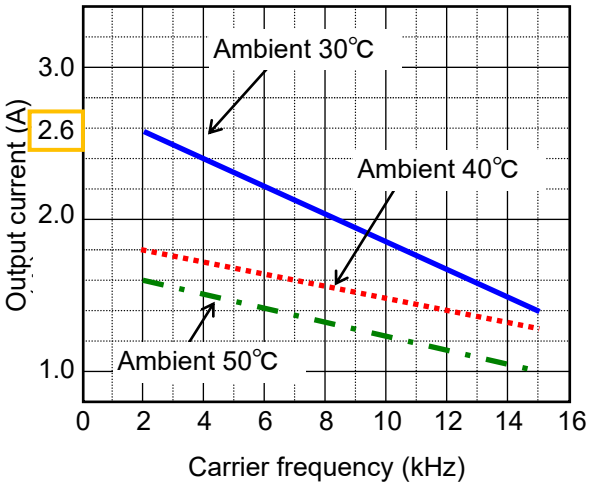

NES1-007LB

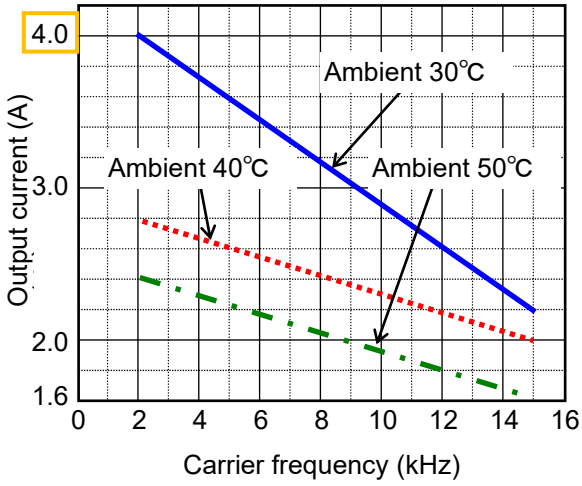

NES1-007SB

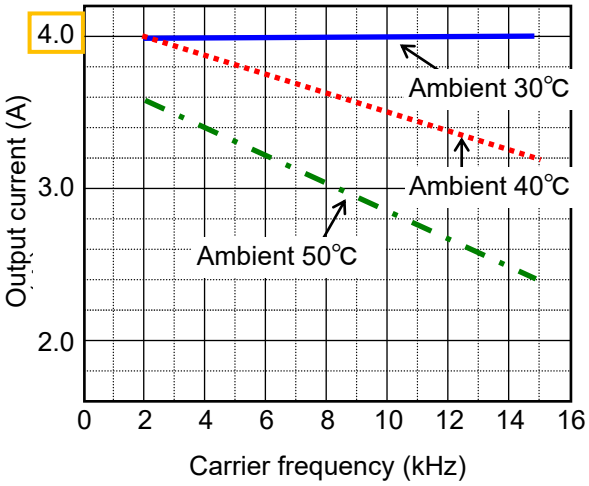

NES1-015LB

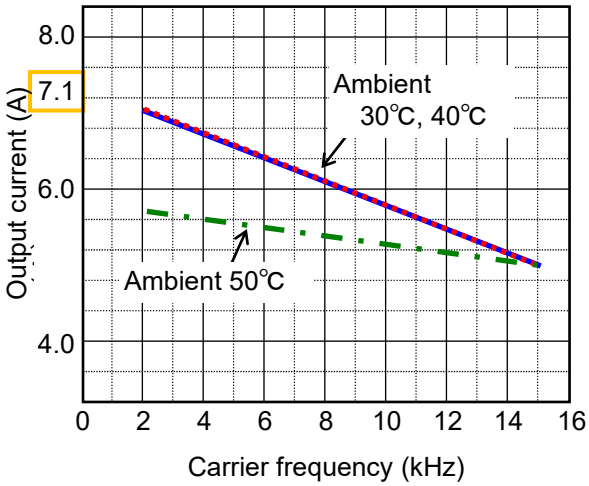

NES1-015SB

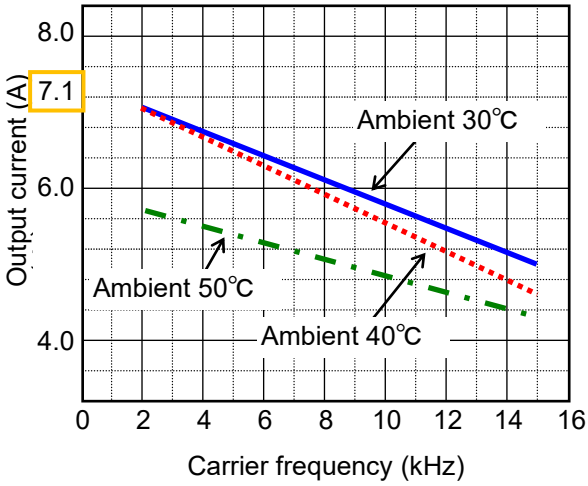

NES1-022LB

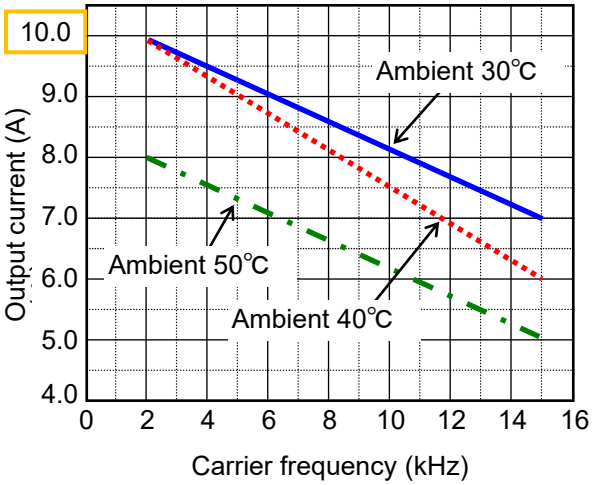

NES1-022SB

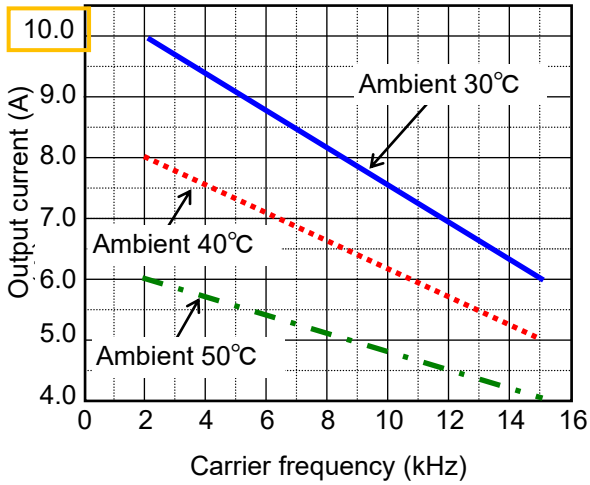

Chapter 13 Option

This chapter describes the options for NE-S1.

13.1 Operator ..... 13 - 3

13.2 Top cover for exclusive use of
NE-S1series : NES1-FFM-M ..... 13 - 54

(Memo)

13.1 Operator

Operator can be selected from NES1-OP, OPE-S/SR/SBK/SRmini, SOP, SOP-VR and WOP. NES1-OP can be attached to the NE-S1 inverter. Other than it, be the connection with the cable.

13.1.1 Attention at the data setting

- When Function code display restriction (b037) is set other than "00" (Full display), some functions are not displayed.
- When Software lock mode selection (b031) is validly set, the parameter cannot be changed.
- The parameter with the symbol "✕" in the "Run Mode Edit - A" column cannot be changed while driving.
- When Software lock mode selection (b031) are set "10", the parameter with the symbol "✓" in the "Run Mode Edit - B" column can be changed while driving.

13.1.2 Monitoring mode (Display of NES1-OP, OPE-S/SR/SBK/SRmini, SOP, SOP-VR)

- The data of Output frequency monitoring (d001) is displayed after power on. This data displayed after power on can be changed by setting of "b038".

"d" Function			Run Mode Edit		Defaults			
Func. Code	Name	Description	A	B	Initial data standard 200/400	Initial data CHN 200/400	Initial data EU 200/400	Page
d001	Output frequency monitoring	0.00 to 99.99 / 100.0 to 400.0 (Hz)	✓	✓	–	–	–	7 - 3
d002	Output current monitoring	0.0 to 655.3 (A)	✕	✕	–	–	–	7 - 3
d003	Rotation direction monitoring	F (forward rotation) / o (stopped) / r (reverse rotation)	✕	✕	–	–	–	7 - 3
d004	PV monitoring	0.00 to 99.99 / 100.0 to 999.9 / 1000. to 9999. / 1000 to 9999 (10000 to 99990) / 「100 to 「999 (100000 to 999000)	✕	✕	–	–	–	7 - 4
d005	Intelligent input terminal status	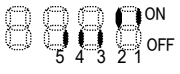 (Example) terminal 1,2: ON terminal 3 to 5: OFF	✕	✕	–	–	–	7 - 4
d006	Intelligent output terminal status	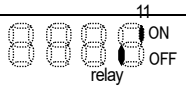 (Example) terminal 11: ON terminal relay: OFF	✕	✕	–	–	–	7 - 4
d007	Scaled output frequency monitoring	0.00 to 99.99 / 100.0 to 999.9 / 1000. to 9999. /1000 to 3999 (10000 to 39990)	✓	✓	–	–	–	7 - 5
d013	Output voltage monitoring	0.0 to 600.0 (V)	✕	✕	–	–	–	7 - 5
d014	Input power monitoring	0.0 to 999.9 (kW)	✕	✕	–	–	–	7 - 5
d015	Cumulative power monitoring	0.0 to 999.9 / 1000. to 9999. / 1000 to 9999 (10000 to 99990) / 「100 to 「999 (100000 to 999000) *1)	✕	✕	–	–	–	7 - 6
d016	Cumulative operation RUN time monitoring	0. to 9999. / 1000 to 9999 (10000 to 99990) / 「100 to 「999 (100000 to 999000) (hr)	✕	✕	–	–	–	7 - 6
d017	Cumulative power-on time monitoring	0. to 9999. / 1000 to 9999 (10000 to 99990) / 「100 to 「999 (100000 to 999000) (hr)	✕	✕	–	–	–	7 - 6

*1) About units, refer to "7.1.10 Cumulative power monitoring".

"d" Function			Run Mode Edit		Defaults			
Func. Code	Name	Description	A	B	Initial data standard 200/400	Initial data CHN 200/400	Initial data EU 200/400	Page
d018	Heatsink temperature monitoring	-20.0 to 120.0 (°C)	×	×	–	–	–	7 - 6
d050	Dual Monitoring	Displays the monitoring data selected by b160, b161.	×	×	–	–	–	7 - 7
d060 *2)	Inverter mode Monitoring	I (Induction Motor) / P (Permanent Magnet Motor)	×	×	–	–	–	7 - 7
d080	Trip counter	0. to 9999. / 1000 to 6553 (10000 to 65530) (counts)	×	×	–	–	–	7 - 7
d081	Trip monitoring 1	Factor, frequency (Hz), current (A), DC bus voltage (VDC), running time (hr), power-on time (hr)	×	×	–	–	–	7 - 8
d082	Trip monitoring 2		×	×	–	–	–	
d083	Trip monitoring 3		×	×	–	–	–	
d084	Trip monitoring 4		×	×	–	–	–	
d085	Trip monitoring 5		×	×	–	–	–	
d086	Trip monitoring 6		×	×	–	–	–	
d090	Warning monitoring	Warning code	×	×	–	–	–	7 - 8
d102	DC bus voltage monitoring	0.0 to 999.9 / 1000. (VDC)	×	×	–	–	–	7 - 8
d104	Electronic thermal overload monitoring	0.0 to 100.0 (%)	×	×	–	–	–	7 - 8

*2) It is displayed in NE-S1 Ver. 2.0 or later.

13.1.3 Function mode (Display of NES1-OP, OPE-S/SR/SBK/SRmini, SOP, SOP-VR)

"F" Function			Run Mode Edit		Defaults			
Func. Code	Name	Description	A	B	Initial data standard 200/400	Initial data CHN 200/400	Initial data EU 200/400	Page
F001	Output frequency setting	Standard default target frequency that determines motor rated speed. Range: 0.00 / start frequency (b082) to maximum frequency (A004/A204) (Hz), or 0.0 to 100.0 (%) (when PID function is enabled)	✓	✓	0.00	←	←	7 - 9
F002	Acceleration time (1)	Standard default acceleration time. Range: 0.00 to 3600 seconds.	✓	✓	10.00	←	←	7 - 13
F202	Acceleration time (1), 2nd motor		✓	✓	10.00	←	←	
F003	Deceleration time (1)	Standard default deceleration time. Range: 0.00 to 3600 seconds.	✓	✓	10.00	←	←	
F203	Deceleration time (1), 2nd motor		✓	✓	10.00	←	←	
F004	RUN key routing	00…Forward 01…Reverse	✕	✕	00	←	←	7 - 12

"A" Function			Run Mode Edit		Defaults			
Func. Code	Name	Description	A	B	Initial data standard 200/400	Initial data CHN 200/400	Initial data EU 200/400	Page
A001	Frequency source	00… VR (volume of NES1-OP, OPE-SR/SRmini) 01…Control terminal 02…Operator 03…Modbus network input 10…Calculate function output	✗	✗	01	←	←	7 - 9
A201	Frequency source, 2nd motor		✗	✗	01	←	←	
A002	Run command source	01…Control terminal 02…Run key on standard panel, or remote operator 03…Modbus network input	✗	✗	01	←	←	7 - 12
A202	Run command source, 2nd motor		✗	✗	01	←	←	
A003	Base frequency	Range: 30.0 to the maximum frequency (A004) (Hz)	✗	✗	60.0 *3)	50.0 *3)	50.0 *3)	7 - 14
A203	Base frequency, 2nd motor	Range: 30.0 to the maximum frequency, 2nd motor (A204) (Hz)	✗	✗	60.0	50.0	50.0	
A004	Maximum frequency	Range: the base frequency (A003) to 400.0 (Hz)	✗	✗	60.0 *3)	50.0 *3)	50.0 *3)	7 - 16
A204	Maximum frequency, 2nd motor	Range: the base frequency, 2nd motor (A203) to 400.0 (Hz)	✗	✗	60.0	50.0	50.0	
A011	[O/OI] input active range start frequency	The output frequency corresponding to the analog input range starting point. Range: 0.00 to 400.0 (Hz)	✗	✓	0.00	←	←	7 - 23
A012	[O/OI] input active range end frequency	The output frequency corresponding to the analog input range ending point. Range: 0.00 to 400.0 (Hz)	✗	✓	0.00	←	←	
A013	[O/OI] input active range start ratio	The starting point (offset) for the active analog input range. Range: 0. to A014 (%)	✗	✓	0.	←	←	
A014	[O/OI] input active range end ratio	The ending point (offset) for the active analog input range. Range: A013 to 100. (%)	✗	✓	100.	←	←	
A015	[O/OI] input start frequency enable	00…Use offset (A011 value) 01…Use 0 Hz	✗	✓	01	←	←	
A016	Analog input filter	Range: 1. to 30. : ×2 ms filter 31. : 500 ms fixed filter with ±0.1 Hz hys.	✗	✓	31.	8.	31.	7 - 21
A019	Multi-speed operation selection	00...Binary operation (8 speeds selectable with 3 terminals) 01...Bit operation (4 speeds selectable with 3 terminals)	✗	✗	00	←	←	7 - 33
A020	Multi-speed frequency 0	Define the first speed of a multi-speed function. Range: 0.00 / start frequency (b082) to maximum frequency (A004) (Hz)	✓	✓	0.00	←	←	
A220	Multi-speed frequency 0, 2nd motor	Define the first speed of a multi-speed function for 2nd motor. Range: 0.00 / start frequency (b082) to maximum frequency, 2nd motor (A204) (Hz)	✓	✓	0.00	←	←	

*3) The initial data for PM mode will be different.

"A" Function			Run Mode Edit		Defaults			
Func. Code	Name	Description	A	B	Initial data standard 200/400	Initial data CHN 200/400	Initial data EU 200/400	Page
A021 to A027	Multi-speed frequency 1 to 7 (for both motors)	Define 7 more speeds of a multi-speed function. Range: 0.00 / start frequency (b082) to maximum frequency (A004/A204) (Hz)	✓	✓	See next row	←	←	7 - 33
		A021	✓	✓	60.00	50.00	50.00	
		A022	✓	✓	40.00	35.00	35.00	
		A023	✓	✓	20.00	←	←	
		A024 to A027	✓	✓	0.00	←	←	
A038	Jog frequency	Define limited speed for jogging operation. Range: start frequency (b082) to 9.99 (Hz)	✓	✓	6.00	←	←	7 - 30
A039	Jog stop mode	Define how to stop the motor at end of jogging operation. 00…Free-run stop (invalid during run) 01…Controlled deceleration (invalid during run) 02…DC braking to stop (invalid during run) 03…Free-run stop (valid during run) 04…Controlled deceleration (valid during run) 05…DC braking to stop (valid during run)	✗	✓	04	←	←	
A041	Torque boost selection	00…Manual torque boost 01…Automatic torque boost	✗	✗	00	←	←	7 - 27
A241	Torque boost selection, 2nd motor		✗	✗	00	←	←	
A042	Manual torque boost value	Set the boost starting torque between 0 and 20 % above normal V/f curve. Range: 0.0 to 20.0 (%) (Ratio to A082/282)	✓	✓	1.0	3.0	1.0	
A242	Manual torque boost value, 2nd motor		✓	✓	1.0	3.0	1.0	
A043	Manual torque boost frequency	Set The frequency of the V/f breakpoint for torque boost. Range: 0.0 to 50.0 (%) (Ratio to A003/203)	✓	✓	5.0	←	←	
A243	Manual torque boost frequency, 2nd motor		✓	✓	5.0	←	←	
A044	V/f characteristic curve	Three available V/f curves. 00…Constant torque 01…Reduced torque (1.7th power) 02…Free V/f	✗	✗	00	←	←	7 - 25
A244	V/f characteristic curve, 2nd motor		✗	✗	00	←	←	
A045	V/f gain	Set the inverter output voltage gain. Range: 20. to 100. (%)	✓	✓	100.	←	←	7 - 39
A245	V/f gain, 2nd motor		✓	✓	100.	←	←	
A046	Voltage compensation gain for automatic torque boost	Set The voltage compensation gain under automatic torque boost. Range: 0. to 255. (%)	✓	✓	100.	←	←	7 - 27
A246	Voltage compensation gain for automatic torque boost, 2nd motor		✓	✓	100.	←	←	

"A" Function			Run Mode Edit		Defaults			
Func. Code	Name	Description	A	B	Initial data standard 200/400	Initial data CHN 200/400	Initial data EU 200/400	Page
A047	Slip compensation gain for automatic torque boost	Set slip compensation gain under automatic torque boost. Range: 0. to 255. (%)	✓	✓	100.	←	←	7 - 27
A247	Slip compensation gain for automatic torque boost, 2nd motor		✓	✓	100.	←	←	
A051	DC braking enable	00…Disabled 01…Enabled during stop 02…Frequency command	✗	✓	00	←	←	7 - 46
A052	DC braking frequency	The frequency at which DC braking begins. Range: 0.00 to 60.00 (Hz)	✗	✓	0.50	←	←	
A053	DC braking wait time	The delay from the end of controlled deceleration to start of DC braking (motor free runs until DC braking begins). Range: 0.0 to 5.0 seconds.	✗	✓	0.0	←	←	
A054	DC braking force for deceleration	Level of DC braking force. Range: 0. to 100. (%)	✗	✓	50.	←	←	
A055	DC braking time for deceleration	Set the duration for DC braking. Range: 0.0 to 10.0 seconds.	✗	✓	0.5	←	←	
A056	DC braking / edge or level detection for [DB] input	00…Edge detection 01…Level detection	✗	✓	01	←	←	
A057	DC braking force at start	Level of DC braking force at start. Range: 0. to 100. (%)	✗	✓	0.	←	←	
A058	DC braking time at start	Set the duration for DC braking at start. Range: 0.0 to 10.0 seconds.	✗	✓	0.0	←	←	
A059	Carrier frequency during DC braking	Carrier frequency of DC braking performance. Range: 2.0 to 15.0 (kHz)	✗	✓	2.0	←	←	
A061	Frequency upper limit	Set the upper limit on output frequency. Range: frequency lower limit (A062) to maximum frequency (A004) (Hz). 0.00 setting disables frequency upper limit function.	✗	✓	0.00	←	←	7 - 31
A261	Frequency upper limit, 2nd motor	Set the upper limit on output frequency for 2nd motor. Range: frequency lower limit, 2nd motor (A262) to maximum frequency, 2nd motor (A204) (Hz). 0.00 setting disables frequency upper limit function for 2nd motor.	✗	✓	0.00	←	←	
A062	Frequency lower limit	Set the lower limit on output frequency. Range: start frequency (b082) to frequency upper limit (A061) (Hz) 0.00 setting disables frequency lower limit function.	✗	✓	0.00	←	←	
A262	Frequency lower limit, 2nd motor	Set the lower limit on output frequency for 2nd motor. Range: start frequency (b082) to frequency upper limit, 2nd motor (A261) (Hz) 0.00 setting disables frequency lower limit function for 2nd motor.	✗	✓	0.00	←	←	

"A" Function			Run Mode Edit		Defaults			
Func. Code	Name	Description	A	B	Initial data standard 200/400	Initial data CHN 200/400	Initial data EU 200/400	Page
A063 A065 A067	Jump frequency (center) 1 to 3	Up to 3 output frequencies can be defined for the output to jump passed to avoid motor resonances (center frequency). Range: 0.00 to 400.0 (Hz)	✗	✓	0.00 0.00 0.00	←	←	7 - 31
A064 A066 A068	Jump frequency width (hysteresis) 1 to 3	Define the distance from the center frequency at which the jump occurs. Range: 0.00 to 10.00 (Hz)	✗	✓	0.50 0.50 0.50	←	←	
A069	Acceleration hold frequency	Set the frequency to hold acceleration. Range: 0.00 to 400.0 (Hz)	✗	✓	0.00	←	←	7 - 32
A070	Acceleration hold time	Set the duration of acceleration hold. Range: 0.0 to 60.0 seconds.	✗	✓	0.0	←	←	
A071	PID enable	00…PID Disabled 01…PID Enabled 02…PID Enabled with reverse output	✗	✓	00	←	←	7 - 40
A072	PID proportional gain	PID proportional gain. Range: 0.00 to 25.00	✓	✓	1.00	←	←	
A073	PID integral time constant	PID integral time constant. Range: 0.0 to 3600. seconds.	✓	✓	1.0	←	←	
A074	PID derivative time constant	PID derivative time constant. Range: 0.00 to 100.0 seconds.	✓	✓	0.00	←	←	
A075	PV scale conversion	Process Variable (PV) scale factor (multiplier). Range: 0.01 to 99.99	✗	✓	1.00	←	←	
A076	PV source	Select source of Process Variable (PV). 01…[O/OI] terminal 02…Modbus network input 10…Calculate function output	✗	✓	01	←	←	
A077	Reverse PID action	00…PID input = SP - PV 01…PID input = - (SP - PV) (SP: PID set point)	✗	✓	00	←	←	
A078	PID variation range	Set the range of PID data variation with reference to the target value. Range: 0.0 to 100.0 (%)	✗	✓	0.0	←	←	
A081	AVR function selection	Automatic (output) voltage regulation, select from three type of AVR functions. 00…AVR enabled 01…AVR disabled 02…AVR enabled except during deceleration	✗	✗	02	01	02	7 - 14
A281	AVR function selection, 2nd motor		✗	✗	02	01	02	
A082	AVR voltage selection	200 V class inverter settings: ……200 / 215 / 220 / 230 / 240 (V) 400 V class inverter settings: ……380 / 400 / 415 / 440 / 460 / 480 (V)	✗	✗	200 / 400	220 / 380	230 / 400	
A282	AVR voltage selection, 2nd motor		✗	✗	200 / 400	220 / 380	230 / 400	
A083	AVR filter time constant	Define the time constant of the AVR filter. Range: 0.000 to 1.000 seconds.	✗	✓	0.030	←	←	
A084	AVR deceleration gain	The gain adjustment of the braking performance. Range: 50. to 200. (%)	✗	✓	100.	←	←	

"A" Function			Run Mode Edit		Defaults			
Func. Code	Name	Description	A	B	Initial data standard 200/400	Initial data CHN 200/400	Initial data EU 200/400	Page
A085	Energy-saving operation mode	00…Normal operation 01…Energy-saving operation	✗	✗	00	←	←	7 - 44
A086	Energy-saving mode tuning	Range: 0.0 to 100.0 (%).	✓	✓	50.0	←	←	
A092	Acceleration time (2)	Duration of 2nd segment of acceleration. Range: 0.00 to 3600. seconds.	✓	✓	10.00	←	←	7 - 35
A292	Acceleration time (2), 2nd motor		✓	✓	10.00	←	←	
A093	Deceleration time (2)	Duration of 2nd segment of deceleration. Range: 0.00 to 3600. seconds.	✓	✓	10.00	←	←	
A293	Deceleration time (2), 2nd motor		✓	✓	10.00	←	←	
A094	Selection method to switch to Acc2/Dec2 profile	Three options for switching from 1st to 2nd acceleration / deceleration. 00…[2CH] input from terminal 01…Transition frequency 02…Forward and reverse	✗	✗	00	←	←	
A294	Selection method to switch to Acc2/Dec2 profile, 2nd motor		✗	✗	00	←	←	
A095	Acc1 to Acc2 frequency transition point	Output frequency at which Acc1 switches to Acc2. Range: 0.00 to 400.0 (Hz)	✗	✗	0.00	←	←	
A295	Acc1 to Acc2 frequency transition point, 2nd motor		✗	✗	0.00	←	←	
A096	Dec2 to Dec1 frequency transition point	Output frequency at which Dec2 switches to Dec1. Range: 0.00 to 400.0 (Hz)	✗	✗	0.00	←	←	
A296	Dec2 to Dec1 frequency transition point, 2nd motor		✗	✗	0.00	←	←	
A097	Acceleration curve selection	Set the characteristic curve of Acc1 and Acc2. 00…linear 01…S-curve 02…U-curve 03…Inverse U-curve	✗	✗	00	←	←	7 - 36
A098	Deceleration curve selection	Set the characteristic curve of Dec1 and Dec2. Options are same as above A097.	✗	✗	00	←	←	
A131	Acceleration curve constant	Range: 01. to 10.	✗	✓	02	←	←	
A132	Deceleration curve constant	Range: 01. to 10.	✗	✓	02	←	←	

"A" Function			Run Mode Edit		Defaults			
Func. Code	Name	Description	A	B	Initial data standard 200/400	Initial data CHN 200/400	Initial data EU 200/400	Page
A141	A input selection for calculate function	00…Operator 01… VR (volume of NES1-OP, OPE-SR/SRmini) 02…Terminal [O/OI] input 04…Modbus network input	✗	✓	00	←	←	7 - 37
A142	B input selection for calculate function	00…Operator 01… VR (volume of NES1-OP, OPE-SR/SRmini) 02…Terminal [O/OI] input 04…Modbus network input	✗	✓	02	←	←	7 - 37
A143	Calculation symbol	Set the operator between A input selection (A141 selects) and B input selection (A142 selects). 00…ADD (A input + B input) 01…SUB (A input - B input) 02…MUL (A input × B input)	✗	✓	00	←	←	
A145	ADD frequency	An offset value that is applied to the output frequency when the [ADD] terminal is ON. Range: 0.00 to 400.0 (Hz)	✗	✓	0.00	←	←	7 - 38
A146	ADD direction selection	00…Plus (adds A145 value to the output frequency setting) 01…Minus (subtracts A145 value from the output frequency setting)	✗	✓	00	←	←	
A154	Deceleration hold frequency	Set the frequency to hold deceleration. Range: 0.00 to 400.0 (Hz)	✗	✓	0.00	←	←	7 - 32
A155	Deceleration hold time	Set the duration of deceleration hold. Range: 0.0 to 60.0 seconds.	✗	✓	0.0	←	←	
A156	PID sleep function action threshold	Set the starting threshold for the PID sleep function. Range: 0.00 to 400.0 (Hz)	✗	✓	0.00	←	←	7 - 40
A157	PID sleep function action delay time	Set the delay time for the PID sleep function to start. Range: 0.0 to 25.5 seconds.	✗	✓	0.0	←	←	
A158	PID sleep function return threshold	Set the ending threshold for the PID sleep function. Range: 0.00 to 400.0 (Hz)	✗	✓	0.00	←	←	
A161	[VR] input active range start frequency	The output frequency corresponding to the [VR] input range starting point. Range: 0.00 to 400.0 (Hz)	✗	✓	0.00	←	←	7 - 23
A162	[VR] input active range end frequency	The output frequency corresponding to the [VR] input range ending point. Range: 0.00 to 400.0 (Hz)	✗	✓	0.00	←	←	
A163	[VR] input active range start ratio	The starting point (offset) for the [VR] input range. Range: 0. to A164 (%)	✗	✓	0.	←	←	
A164	[VR] input active range end ratio	The ending point (offset) for the [VR] input range. Range: A163 to 100. (%)	✗	✓	100.	←	←	
A165	[VR] input start frequency enable	00…Use offset (A161 value) 01…Use 0 Hz	✗	✓	01	←	←	

"b" Function			Run Mode Edit		Defaults			
Func. Code	Name	Description	A	B	Initial data standard 200/400	Initial data CHN 200/400	Initial data EU 200/400	Page
b001	Restart mode on undervoltage trip	Select inverter restart method. 00…Alarm output after trip, no automatic restart 01…Restart at 0 Hz 02…Resume operation after active frequency matching 03…After active frequency matching, deceleration stop and alarm output after trip	✗	✓	00	←	←	7 - 55
b002	Allowable undervoltage time	Set the amount of time a power input undervoltage can occur without trip. Range: 0.3 to 25.0 seconds. If undervoltage occurs longer than this time, the inverter trips even if the restart mode is selected.	✗	✓	1.0	←	←	
b003	Retry wait time before motor restart	Set the delay time from undervoltage condition going away to the inverter restarting. Range: 0.3 to 100.0 seconds.	✗	✓	1.0	←	←	
b004	Instantaneous undervoltage trip alarm enable	00…Disabled 01…Enabled 02…Disabled during stop and deceleration stop	✗	✓	00	←	←	
b005	Number of restarts on undervoltage trip	00…Restart 16 times 01…Always restart	✗	✓	00	←	←	
b007	Restart frequency threshold	Set the frequency the motor restarts from 0 Hz at free-running status. Range: 0.00 to 400.0 (Hz)	✗	✓	0.50	←	←	
b008	Restart mode on overvoltage / overcurrent trip	Select inverter restart method. 00…Alarm output after trip, no automatic restart 01…Restart at 0 Hz 02…Resume operation after active frequency matching 03…After active frequency matching, deceleration stop and alarm output after trip	✗	✓	00	←	←	7 - 57
b010	Number of retry on overvoltage / overcurrent trip	Range: 1 to 3 times	✗	✓	3	←	←	
b011	Retry wait time on overvoltage / overcurrent trip	Range: 0.3 to 100.0 seconds.	✗	✓	1.0	←	←	
b012	Level of electronic thermal	Set a level of electronic thermal. Range: (0.20 to 1.00) × inverter rated current Amps.	✗	✓	1.00 × inverter rated current	←	←	7 - 67
b212	Level of electronic thermal, 2nd motor		✗	✓	1.00 × inverter rated current	←	←	
b013	Electronic thermal characteristic	00…Reduced torque 01…Constant torque 02…Free setting	✗	✓	01	←	←	
b213	Electronic thermal characteristic, 2nd motor		✗	✓	01	←	←	

"b" Function			Run Mode Edit		Defaults			
Func. Code	Name	Description	A	B	Initial data standard 200/400	Initial data CHN 200/400	Initial data EU 200/400	Page
b015	Free setting electronic thermal frequency 1	Range: 0. to b017 (Hz)	✕	✓	0.	←	←	7 - 68
b016	Free setting electronic thermal current 1	Range: (0.00 to 1.00) × inverter rated current Amps.	✕	✓	0.00	←	←	
b017	Free setting electronic thermal frequency 2	Range: b015 to b019 (Hz)	✕	✓	0.	←	←	
b018	Free setting electronic thermal current 2	Range: (0.00 to 1.00) × inverter rated current Amps.	✕	✓	0.00	←	←	
b019	Free setting electronic thermal frequency 3	Range: b017 to 400. (Hz)	✕	✓	0.	←	←	
b020	Free setting electronic thermal current 3	Range: (0.00 to 1.00) × inverter rated current Amps.	✕	✓	0.00	←	←	
b021	Overload restriction operation mode	Select the restriction operation mode during overload conditions. 00…Disabled 01…Enabled for acceleration and constant speed 02…Enabled for constant speed only	✕	✓	01	←	←	7 - 69
b221	Overload restriction operation mode, 2nd motor		✕	✓	01	←	←	
b022	Overload restriction level	Set the level of overload restriction. Range: (0.20 to 2.00) × inverter rated current Amps.	✕	✓	1.50 × inverter rated current	←	←	
b222	Overload restriction level, 2nd motor		✕	✓	1.50 × inverter rated current	←	←	
b023	Deceleration rate at overload restriction	Set the deceleration rate when inverter detects over b022 / b222. Range: 0.1 to 3000. seconds.	✕	✓	1.0	←	←	
b223	Deceleration rate at overload restriction, 2nd motor		✕	✓	1.0	←	←	
b024	Overload restriction operation mode 2	Select the restriction operation mode during overload conditions. 00…Disabled 01…Enabled for acceleration and constant speed 02…Enabled for constant speed only	✕	✓	01	←	←	
b025	Overload restriction level 2	Set the level of overload restriction. Range: (0.20 to 2.00) × inverter rated current Amps.	✕	✓	1.50 × inverter rated current	←	←	
b026	Deceleration rate 2 at overload restriction	Set the deceleration rate when inverter detects over b025. Range: 0.1 to 3000. seconds.	✕	✓	1.0	←	←	
b027	OC suppression selection	00…Disabled 01…Enabled	✕	✓	01	←	←	7 - 70

"b" Function			Run Mode Edit		Defaults			
Func. Code	Name	Description	A	B	Initial data standard 200/400	Initial data CHN 200/400	Initial data EU 200/400	Page
b028	Current level of active frequency matching	Set the current level of active frequency matching restart. Range: (0.20 to 2.00) × inverter rated current Amps.	✗	✓	1.00 × inverter rated current	←	←	7 - 55
b029	Deceleration rate of active frequency matching	Set the deceleration rate when active frequency matching restart. Range: 0.1 to 3000. seconds.	✗	✓	0.5	←	←	
b030	Start frequency of active frequency matching	00…frequency at previous shutoff 01…start from maximum frequency 02…start from frequency command	✗	✓	00	←	←	
b031	Software lock mode selection	Prevents parameter changes. 00…all parameters except b031 are locked when [SFT] terminal is ON. 01…all parameters except b031, F001, A020, A220, A021 to A027, and A038 are locked when [SFT] terminal is ON. 02…all parameters except b031 are locked. 03…all parameters except b031, F001, A020, A220, A021 to A027, and A038 are locked. 10…High level access including b031. See the "Run Mode Edit - B" column in the table in this chapter for the accessible parameters in this high level access mode.	✗	✓	01	10	01	7 - 50
b034	Run/power ON warning time	Range: 0. (Warning disabled), 1. to 9999. (10 to 99,990 hrs (unit: 10)), 1000 to 6553 (100,000 to 655,350 hrs (unit: 100))	✗	✓	0.	←	←	7 - 76
b035	Rotation direction restriction	00…No restriction 01…Reverse rotation is restricted 02…Forward rotation is restricted	✗	✗	00	←	←	7 - 12
b036	Reduced voltage start selection	Range: 0 (the function disabled), 1 (approx. 4 ms) to 250 (approx. 1 sec)	✗	✓	3	←	←	7 - 29
b037	Function code display restriction	00…Full display 01…Function-specific display 03…Data comparison display 04…Basic display 05…Monitor display only	✗	✓	00	←	←	7 - 53
b038	Initial display selection	000…Function code that SET key pressed last displayed 001 to 060…d001 to d060 displayed 201…F001 displayed 202…B display of WOP (In case of Digital operator, same "000" setting)	✗	✓	001	←	←	7 - 52

"b" Function			Run Mode Edit		Defaults			
Func. Code	Name	Description	A	B	Initial data standard 200/400	Initial data CHN 200/400	Initial data EU 200/400	Page
b050	Controlled deceleration on power loss selection	00…Disabled 01…Deceleration stop 02…Deceleration stop with DC bus voltage controlled 03…Deceleration stop with DC bus voltage controlled, then restart	✕	✕	00	←	←	7 - 64
b051	DC bus voltage trigger level of controlled deceleration	Set the DC bus voltage that starts controlled deceleration operation. Range: 0.0 to 400.0 (VDC). (200 V class inverter settings), 0.0 to 800.0 (VDC). (400 V class inverter settings)	✕	✕	220.0/ 440.0	←	←	
b052	Overvoltage threshold of controlled deceleration	Set the OV-LAD stop level of controlled deceleration operation. Range: 0.0 to 400.0 (VDC). (200 V class inverter settings), 0.0 to 800.0 (VDC). (400 V class inverter settings)	✕	✕	360.0/ 720.0	←	←	
b053	Deceleration time of controlled deceleration	Range: 0.01 to 300.0 seconds.	✕	✕	1.00	←	←	
b054	Initial frequency drop of controlled deceleration	Set the initial frequency drop of controlled deceleration. Range: 0.00 to 10.00 (Hz)	✕	✕	0.00	←	←	
b060	Maximum-limit level of window comparator (O/OI)	Range: {b061+(b062 × 2)} to 100 (%)	✓	✓	100.	←	←	7 - 81
b061	Minimum-limit level of window comparator (O/OI)	Range: 0 to {b060 - (b062 × 2)} (%)	✓	✓	0.	←	←	
b062	Hysteresis width of window comparator (O/OI)	Range: 0 to {(b060 - b061) / 2} (%) (Maximum of 10 %)	✓	✓	0.	←	←	
b070	Operation level at O/OI disconnection	Range: 0 to 100 (%), or "no" (ignore)	✕	✓	no	←	←	
b078	Cumulative power clearance	00…OFF 01…ON (press STR/SET key then clear)	✓	✓	00	←	←	7 - 6
b079	Cumulative power display gain	Range: 1. to 1000.	✓	✓	1.	←	←	
b082	Start frequency	Set the starting frequency for the inverter output. Range: 0.01 to 9.99 (Hz)	✕	✓	0.50	←	←	7 - 29
b083	Carrier frequency	Set the PWM carrier frequency (internal switching frequency). Range: 2.0 to 15.0 (kHz) (The settings may require a derating of the output current. See section 12.3.)	✕	✓	2.0 *4)	←	←	7 - 16

*4) The initial data for PM mode will be different.

"b" Function			Run Mode Edit		Defaults			
Func. Code	Name	Description	A	B	Initial data standard 200/400	Initial data CHN 200/400	Initial data EU 200/400	Page
b084	Initialization mode (parameters or trip history)	Select initialized data. 00…Initialization disabled 01…Clearing trip history 02…Initializing all parameters 03…Clearing trip history and initializing all parameters	✗	✗	00	←	←	7 - 83
b085	Initial data selection	Select default parameter values on initialization. 00…Mode 0 01…Mode 1 03…Mode 3	✗	✗	00	03	01	
b086	Frequency scaling conversion factor	Specify a constant to scale the displayed frequency for d007 monitor. Range: 0.01 to 99.99	✓	✓	1.00	←	←	7 - 5
b087	STOP/RESET key enable	Select whether the STOP/RESET key is enabled. 00…Enabled 01…Disabled always 02…Enabled only trip reset	✗	✓	00	←	←	7 - 50
b088	Restart mode after FRS	Selects how the inverter resumes operation when free-run stop (FRS) is cancelled. 00…Restart from 0 Hz 01…Restart from active frequency matching	✗	✓	00	←	←	7 - 62
b089	Automatic carrier frequency reduction	00…Disabled 01…Enabled, depending on the output current 02…Enabled, depending on the heatsink temperature	✗	✗	00	←	←	7 - 73
b091	Stop mode selection	00…Deceleration stop 01…Free-run stop	✗	✓	00	←	←	7 - 13
b094	Initialization target data setting	00…ALL parameters 01… ALL parameters except terminal and communication data	✗	✗	00	←	←	7 - 83
b100	Free V/f setting, frequency 1	Range: 0. to b102 (Hz)	✗	✗	0.	←	←	7 - 26
b101	Free V/f setting, voltage 1	Range: 0.0 to 300.0 V (200 V class), 0.0 to 600.0 V (400 V class)	✗	✗	0.0	←	←	
b102	Free V/f setting, frequency 2	Range: b100 to b104 (Hz)	✗	✗	0.	←	←	
b103	Free V/f setting, voltage 2	Range: 0.0 to 300.0 V (200 V class), 0.0 to 600.0 V (400 V class)	✗	✗	0.0	←	←	
b104	Free V/f setting, frequency 3	Range: b102 to b106 (Hz)	✗	✗	0.	←	←	
b105	Free V/f setting, voltage 3	Range: 0.0 to 300.0 V (200 V class), 0.0 to 600.0 V (400 V class)	✗	✗	0.0	←	←	
b106	Free V/f setting, frequency 4	Range: b104 to b108 (Hz)	✗	✗	0.	←	←	
b107	Free V/f setting, voltage 4	Range: 0.0 to 300.0 V (200 V class), 0.0 to 600.0 V (400 V class)	✗	✗	0.0	←	←	
b108	Free V/f setting, frequency 5	Range: b106 to b110 (Hz)	✗	✗	0.	←	←	
b109	Free V/f setting, voltage 5	Range: 0.0 to 300.0 V (200 V class), 0.0 to 600.0 V (400 V class)	✗	✗	0.0	←	←	

"b" Function			Run Mode Edit		Defaults			
Func. Code	Name	Description	A	B	Initial data standard 200/400	Initial data CHN 200/400	Initial data EU 200/400	Page
b110	Free V/f setting, frequency 6	Range: b108 to b112 (Hz)	✗	✗	0.	←	←	7 - 26
b111	Free V/f setting, voltage 6	Range: 0.0 to 300.0 V (200 V class), 0.0 to 600.0 V (400 V class)	✗	✗	0.0	←	←	
b112	Free V/f setting, frequency 7	Range: b110 to 400. (Hz)	✗	✗	0.	←	←	
b113	Free V/f setting, voltage 7	Range: 0.0 to 300.0 V (200 V class), 0.0 to 600.0 V (400 V class)	✗	✗	0.0	←	←	
b130	Deceleration overvoltage suppression enable	00…Disabled 01…Enabled (DC voltage constant control) 02…Enabled at the deceleration (with acceleration) 03…Enabled at the constant and deceleration (with acceleration)	✗	✓	00	←	←	7 - 71
b131	Deceleration overvoltage suppression level	DC bus voltage of suppression starting. Range: 330. to 390. (VDC). (200 V class inverter settings), 660. to 780. (VDC). (400 V class inverter settings)	✗	✓	360. / 720.	←	←	
b132	Deceleration overvoltage suppression const.	Acceleration rate when b130=02,03. Range: 0.10 to 30.00 seconds.	✗	✓	1.00	←	←	
b133	Deceleration overvoltage suppression proportional gain	Proportional gain when b130=01. Range: 0.00 to 5.00	✓	✓	0.20	←	←	
b134	Deceleration overvoltage suppression integral time	Integral time when b130=01. Range: 0.0 to 150.0 seconds.	✓	✓	1.0	←	←	
b150	Display external operator connected	When an external operator is connected via RS-422 port, the NES1-OP is locked and shows only one "d" parameter. Range: 001 to 060 (d001 to d060)	✓	✓	001	←	←	7 - 52
b160	1st parameter of Dual Monitor	Set any two "d" parameters in b160 and b161, then they can be monitored in d050. The two parameters are switched by up/down keys. Range: 001 to 018 (d001 to d018)	✓	✓	001	←	←	7 - 7
b161	2nd parameter of Dual Monitor		✓	✓	002	←	←	
b163	Frequency set in monitoring	00…Frequency set disabled 01…Frequency set enabled	✓	✓	01	←	←	7 - 3
b164	Automatic return to the initial display	After 10 minutes from the last key operation, display returns to the initial parameter set by b038. 00…Disabled 01…Enabled	✓	✓	00	←	←	7 - 52
b165	Operation at external operator connection loss	00…Trip 01…Trip after deceleration stop 02…Ignore 03…Free-run stop 04…Deceleration stop	✓	✓	02	←	←	7 - 51

"b" Function			Run Mode Edit		Defaults			
Func. Code	Name	Description	A	B	Initial data standard 200/400	Initial data CHN 200/400	Initial data EU 200/400	Page
b166	Data Read/Write selection	00…Read/Write OK 01…Read/Write protected	✕	✓	00	←	←	7 - 52
b171 *5)	Inverter mode selection	00…Disable 01…Induction Motor 03…Permanent Magnet Motor	✕	✕	00	←	←	7 - 86
b180	Initialization trigger	Select to perform initialization or not. 00…Initialization disable 01…Perform initialization	✕	✕	00	←	←	7 - 83

*5) It is displayed in NE-S1 Ver. 2.0 or later.

"C" Function			Run Mode Edit		Defaults			
Func. Code	Name	Description	A	B	Initial data standard 200/400	Initial data CHN 200/400	Initial data EU 200/400	Page
C001	Intelligent input [1] function	Select input terminal [1] function from 34 options (see "13.1.6 Input/Output function summary table").	✕	✓	00 [FW]	←	←	7 - 17
C002	Intelligent input [2] function	Select input terminal [2] function from 34 options (see "13.1.6 Input/Output function summary table").	✕	✓	01 [RV]	←	←	
C003	Intelligent input [3] function	Select input terminal [3] function from 34 options (see "13.1.6 Input/Output function summary table").	✕	✓	02 [CF1]	←	←	
C004	Intelligent input [4] function	Select input terminal [4] function from 34 options (see "13.1.6 Input/Output function summary table").	✕	✓	03 [CF2]	←	←	
C005	Intelligent input [5] function	Select input terminal [5] function from 34 options (see "13.1.6 Input/Output function summary table").	✕	✓	18 [RS]	←	←	
C011	Intelligent input [1] active state	Select logic conversion. 00…normally open [NO] 01…normally closed [NC]	✕	✓	00	←	←	
C012	Intelligent input [2] active state		✕	✓	00	←	←	
C013	Intelligent input [3] active state		✕	✓	00	←	←	
C014	Intelligent input [4] active state		✕	✓	00	←	←	
C015	Intelligent input [5] active state		✕	✓	00	←	←	
C021	Intelligent output [11] function	Select output terminal [11] function from 27 programmable functions (see "13.1.6 Input/Output function summary table").	✕	✓	01 [FA1]	←	←	7 - 18
C026	Intelligent relay function	Select intelligent relay terminal function from 27 programmable functions (see "13.1.6 Input/Output function summary table").	✕	✓	05 [AL]	←	←	
C027	[FM] terminal selection (Pulse/PWM output)	00…Output frequency (PWM) 01…Output current (PWM) 03…Output frequency (Pulse train) 04…Output voltage (PWM) 05…Input power (PWM) 06…Electronic thermal load ratio (PWM) 07…LAD frequency (PWM) 08…Output current (Pulse train) 10…Heatsink temperature (PWM)	✕	✓	07	←	←	7 - 24
C030	Digital current monitor reference value	Set the current value output pulse frequency is 1440 Hz when C027=08. Range: (0.20 to 2.00) × inverter rated current Amps.	✓	✓	1.00 × inverter rated current	←	←	7 - 24
C031	Intelligent output [11] active state	Select logic conversion. 00…normally open [NO] 01…normally closed [NC]	✕	✓	00	←	←	7 - 19
C036	Intelligent relay active state		✕	✓	01	←	←	

"C" Function			Run Mode Edit		Defaults			
Func. Code	Name	Description	A	B	Initial data standard 200/400	Initial data CHN 200/400	Initial data EU 200/400	Page
C038	Output mode of low current detection	00…During acceleration, deceleration, and constant speed 01…During constant speed only	✗	✓	01	←	←	7 - 79
C039	Low current detection level	Set the level of low current detection. Range: (0.00 to 2.00) × inverter rated current Amps.	✓	✓	1.00 × inverter rated current	←	←	
C040	Output mode of overload warning	00…During acceleration, deceleration, and constant speed 01…During constant speed only	✗	✓	01	←	←	7 - 70
C041	Overload warning level	Set the overload warning signal level. Range: (0.00 to 2.00) × inverter rated current Amps.	✓	✓	1.15 × inverter rated current	←	←	
C241	Overload warning level, 2nd motor		✓	✓	1.15 × inverter rated current	←	←	
C042	Frequency arrival setting for acceleration	Set the frequency arrival setting threshold for the output frequency during acceleration. Range: 0.00 to 400.0 (Hz)	✗	✓	0.00	←	←	7 - 74
C043	Frequency arrival setting for deceleration	Set the frequency arrival setting threshold for the output frequency during deceleration. Range: 0.00 to 400.0 (Hz)	✗	✓	0.00	←	←	
C044	PID deviation level	Set the allowable PID deviation (absolute value). Range: 0.0 to 100.0 (%)	✗	✓	3.0	←	←	7 - 40
C052	PV comparison signal output high limit	When the PV exceeds this value, the [FBV] function signal turns OFF. Range: 0.0 to 100.0 (%)	✗	✓	100.0	←	←	
C053	PV comparison signal output low limit	When the PV goes below this value, the [FBV] function signal turns ON. Range: 0.0 to 100.0 (%)	✗	✓	0.0	←	←	
C061	Electronic thermal warning level	Range: 0. to 100. (%) (Setting "0." means disabled.)	✗	✓	90.	←	←	7 - 68
C063	Zero speed detection level	Range: 0.00 to 100.0 (Hz)	✗	✓	0.00	←	←	7 - 76
C064	Heatsink overheat warning	Range: 0. to 110. (°C)	✗	✓	100.	←	←	7 - 78
C070	Selection of OPE/Modbus	00…OPE 01…Modbus	✗	✗	00	←	←	8 - 6
C071	Communication speed	04…4,800 bps 05…9,600 bps 06…19,200 bps 07…38,400 bps	✗	✓	05	←	←	
C072	Modbus address	Set the address of the inverter on the Modbus network. Range: 1. to 247.	✗	✓	1.	←	←	
C074	Communication parity	00…No parity 01…Even parity 02…Odd parity	✗	✓	00	←	←	
C075	Communication stop bit	01…1 bit 02…2 bit	✗	✓	01	←	←	

"C" Function			Run Mode Edit		Defaults			
Func. Code	Name	Description	A	B	Initial data standard 200/400	Initial data CHN 200/400	Initial data EU 200/400	Page
C076	Communication error selection	Select inverter response to communication error. 00…Trip 01…Trip after deceleration stop 02…Ignore 03…Free-run stop 04…Deceleration stop	✗	✓	02	←	←	8 - 6
C077	Communication error detection time	Set the communications watchdog timer period. Range: 0.00 to 99.99 seconds. (Setting "0.00" means disabled.)	✗	✓	0.00	←	←	
C078	Communication wait time	Set the inverter wait time from receiving a message to transmitting a message. Range: 0. to 1000. milliseconds.	✗	✓	0.	←	←	
C081	O/OI input gain calibration	Set the scale factor between the external frequency command on terminals L–O/OI, and the output frequency. Range: 0.0 to 200.0 (%)	✓	✓	100.0	←	←	7 - 22
C091	(The parameter for factory use)	**(Do not change)**	✓	✓	00	←	←	-
C101	Up/Down memory mode selection	Select keep the last frequency command adjusted by UP/DWN key or not. 00…Clear last frequency command (return to default frequency F001) 01…Keep last frequency command adjusted by UP/DWN key	✗	✓	00	←	←	7 - 38
C102	Reset selection	Select response method when [RS] terminal turns ON/OFF. 00…Cancel trip state at [RS] terminal input ON transition, stops inverter if in Run Mode 01…Cancel trip state at [RS] terminal input OFF transition, stops inverter if in Run Mode 02…Cancel trip state at [RS] terminal input ON transition, no effect if in Run Mode	✓	✓	00	←	←	7 - 60
C103	Restart mode after reset	Select the restart mode after resetting. 00…Start with 0 Hz 01…Start with active frequency matching	✗	✓	00	←	←	
C104	UP/DWN clear mode	Select the frequency set value when [UDC] terminal turns to ON. 00…0 Hz 01…Original setting (in the memory at power on)	✗	✓	00	←	←	7 - 38
C105	FM gain adjustment	Range: 50. to 200. (%)	✓	✓	100.	←	←	7 - 24
C130	Intelligent output [11] on delay	Range: 0.0 to 100.0 seconds.	✗	✓	0.0	←	←	7 - 20
C131	Intelligent output [11] off delay		✗	✓	0.0	←	←	
C140	Intelligent relay output on delay	Range: 0.0 to 100.0 seconds.	✗	✓	0.0	←	←	
C141	Intelligent relay output off delay		✗	✓	0.0	←	←	

"C" Function			Run Mode Edit		Defaults			
Func. Code	Name	Description	A	B	Initial data standard 200/400	Initial data CHN 200/400	Initial data EU 200/400	Page
C142	Logic output operand A	Select from all the programmable functions available for logic outputs except LOG, NO.	✕	✓	00	←	←	7 - 77
C143	Logic output operand B		✕	✓	00	←	←	
C144	Logic output operator	Select a logic operator to calculate [LOG] output state. 00…[LOG] = A AND B 01…[LOG] = A OR B 02…[LOG] = A XOR B	✕	✓	00	←	←	
C151	Button sensitivity selection	Range: 0. to 250. (×2 ms) / no	✕	✓	10.	←	←	7 - 54
C152	Scroll sensitivity selection	Range: 1. to 20.	✕	✓	10.	←	←	
C155	Ground fault detection	00…Disabled 01…Enabled	✕	✓	01	←	←	7 - 82
C157	Output phase loss detection	00…Disabled 01…Enabled	✕	✓	00	←	←	7 - 82
C160	Intelligent input [1] response time	Set response time of each input terminal. Range: 0. to 200. (×2 ms)	✕	✓	1.	←	←	7 - 18
C161	Intelligent input [2] response time		✕	✓	1.	←	←	
C162	Intelligent input [3] response time		✕	✓	1.	←	←	
C163	Intelligent input [4] response time		✕	✓	1.	←	←	
C164	Intelligent input [5] response time		✕	✓	1.	←	←	
C169	Multi-speed determination time	Range: 0. to 200. (×10 ms)	✕	✓	0.	←	←	7 - 33

"H" Function			Run Mode Edit		Defaults			
Func. Code	Name	Description	A	B	Initial data standard 200/400	Initial data CHN 200/400	Initial data EU 200/400	Page
H001 *6)	Auto-tuning selection	00…Disabled 01…Not rotation 02…Rotation	✕	✕	00	←	←	7 - 88
H003	Motor capacity	0.10 / 0.20 / 0.40 / 0.55 / 0.75 / 1.10 / 1.50 / 2.20 / 3.00 / 3.70 / 4.00 / 5.50 (kW)	✕	✕	*7)	←	←	7 - 49
H203	Motor capacity, 2nd motor		✕	✕		←	←	
H004	Motor poles setting	2 / 4 / 6 / 8 (poles)	✕	✕	4	←	←	
H204	Motor poles setting, 2nd motor		✕	✕	4	←	←	
H006	Motor stabilization constant	Range: 0. to 255. (%)	✓	✓	100.	←	←	7 - 44
H206	Motor stabilization constant, 2nd motor		✓	✓	100.	←	←	
H101 *6)	PM motor rated voltage	Range: 100.0 to 240.0 (V) (200 V class inverter settings) 200.0 to 480.0 (V) (400 V class inverter settings)	✕	✕	200.0 / 400.0	←	←	7 - 87
H102 *6)	PM motor code setting	00…Hitachi standard (Use H106 to H110 at motor constants) 01…Auto-Tuning (Use H110 to H114 at motor constants)	✕	✕	00	←	←	
H103 *6)	PM motor capacity	0.10 / 0.20 / 0.40 / 0.55 / 0.75 / 1.10 / 1.50 / 2.20 / 3.00 / 3.70 / 4.00 / 5.50 / 7.50 (kW)	✕	✕	*7)	←	←	
H104 *6)	PM motor pole setting	2 / 4 / 6 / 8 / 10 / 12 / 14 / 16 / 18 / 20 / 22 / 24 / 26 / 28 / 30 / 32 / 34 / 36 / 38 / 40 / 42 / 44 / 46 / 48 (poles)	✕	✕	01 (4P)	←	←	
H105 *6)	PM rated current	Range: (0.20 to 1.00) × inverter rated current Amps.	✕	✕	*7)	←	←	
H106 *6)	PM const R (Resistance)	Range: 0.001 to 65.535 (Ω)	✕	✕	*7)	←	←	
H107 *6)	PM const Ld (d-axis inductance)	Range: 0.01 to 655.35 (mH)	✕	✕	*7)	←	←	
H108 *6)	PM const Lq (q-axis inductance)	Range: 0.01 to 655.35 (mH)	✕	✕	*7)	←	←	
H109 *6)	PM const Ke (Induction voltage constant)	Range: 0.1 to 6553.5 (mV/(rad/s))	✕	✕	*7)	←	←	
H110 *6)	PM const J (Moment of inertia)	Range: 0.001 to 9999.000 (kgm^2)	✕	✕	*7)	←	←	

*6) It is displayed in PM mode.
*7) Specified by the capacity of each inverter model.

"H" Function			Run Mode Edit		Defaults			
Func. Code	Name	Description	A	B	Initial data standard 200/400	Initial data CHN 200/400	Initial data EU 200/400	Page
H111 *6)	PM const R (Resistance, Auto)	Range: 0.001 to 65.535 (Ω)	✗	✗	*7)	←	←	7 - 87
H112 *6)	PM const Ld (d-axis inductance, Auto)	Range: 0.01 to 655.35 (mH)	✗	✗	*7)	←	←	
H113 *6)	PM const Lq (q-axis inductance, Auto)	Range: 0.01 to 655.35 (mH)	✗	✗	*7)	←	←	
H114 *6)	PM const Ke (Induction voltage constant, Auto)	Range: 0.1 to 6553.5 (mV/(rad/s))	✗	✗	*7)	←	←	
H116 *6)	PM speed response	Range: 1. to 1000. (%)	✓	✓	100.	←	←	7 - 92
H117 *6)	PM starting current	Range: 20. to 100. (%)	✗	✗	70.	←	←	
H118 *6)	PM starting time	Range: 0.01 to 60.00 seconds	✗	✗	1.00	←	←	
H119 *6)	PM stabilization constant	Range: 0. to 120. (%)	✓	✓	100.	←	←	
H121 *6)	PM minimum frequency ratio	Range: 0. to 50. (%)	✓	✓	8.	←	←	
H122 *6)	PM no-load current	Range: 0. to 100. (%)	✓	✓	10.	←	←	
H123 *6)	PM starting method selection	00…Normal 01…Initial magnet position estimation	✗	✗	00	←	←	
H133 *6)	PM initial magnet position estimation detect time	Range: 0.03 to 2.50 seconds	✗	✗	0.05	←	←	
H134 *6)	PM initial magnet position estimation voltage gain	Range: 0 to 120 (%)	✗	✗	100	←	←	
H135 *6)	PM step-out protection selection	00…Disable 01…Error 02…Restart at 0 Hz	✓	✓	00	←	←	
H136 *6)	PM step-out protection level	Range: 1 to 100 (%)	✓	✓	50	←	←	
H141 *6)	PM overcurrent detection level	Range: (1.00 to 2.50) × inverter rated current Amps.	✗	✓	2.35 × inverter rated current	←	←	
H142 *6)	PM starting overcurrent detection level	Range: (1.00 to 2.50) × inverter rated current Amps.	✗	✓	1.80 × inverter rated current	←	←	

*6) It is displayed in PM mode.
*7) Specified by the capacity of each inverter model.

13.1.4 Monitoring mode (Display of WOP)

・The initial state displays "d001" at power on. If you want to fix it to any display, please change setting of "b038".

"d" Function			Run Mode Edit		Defaults			
Func. Code (WOP)	Name	Description	A	B	Initial data standard 200/400	Initial data CHN 200/400	Initial data EU 200/400	Page
d001 (Output FQ)	Output frequency monitoring	0.00 to 400.00 (Hz)	✓	✓	–	–	–	7 - 3
d002 (Output current)	Output current monitoring	0.0 to 655.3 (A)	✕	✕	–	–	–	7 - 3
d003 (Rotation)	Rotation direction monitoring	FWD (forward rotation) STOP (stopped) REV (reverse rotation)	✕	✕	–	–	–	7 - 3
d004 (PID-FB)	PV monitoring	0.00 to 10000.0	✕	✕	–	–	–	7 - 4
d005 (Input)	Intelligent input terminal status	1 to 5 terminals LLLLL/HHHHH	✕	✕	–	–	–	7 - 4
d006 (Output)	Intelligent output terminal status	11, RY terminal LL/HH	✕	✕	–	–	–	7 - 4
d007 (Scaled FQ)	Scaled output frequency monitoring	0.00 to 39996.00	✓	✓	–	–	–	7 - 5
d013 (Output Voltage)	Output voltage monitoring	0.0 to 600.0 (V)	✕	✕	–	–	–	7 - 5
d014 (Input Power)	Input power monitoring	0.0 to 999.9 (kW)	✕	✕	–	–	–	7 - 5
d015 (kW-hour)	Cumulative power monitoring	0.0 to 999999.9 *1)	✕	✕	–	–	–	7 - 6
d016 (RUN time)	Cumulative operation RUN time monitoring	0. to 999999. (hr)	✕	✕	–	–	–	7 - 6
d017 (ON time)	Cumulative power-on time monitoring	0. to 999999. (hr)	✕	✕	–	–	–	7 - 6
d018 (Heatsink Tmp.)	Heatsink temperature monitoring	-20.0 to 120.0 (°C)	✕	✕	–	–	–	7 - 6
d031 (Clock)	Current time monitoring	Current time	✕	✕	–	–	–	7 - 6
d050 (Dual)	Dual Monitoring	Display the monitoring data selected by b160, b161.	✕	✕	–	–	–	7 - 7
d060 (Inverter mode) *2)	Inverter mode Monitoring	IM (Induction Motor) / PM (Permanent Magnet Motor)	✕	✕	–	–	–	7 - 7

*1) About units, refer to "7.1.10 Cumulative power monitoring".
*2) It is displayed in NE-S1 Ver. 2.0 or later.

"d" Function			Run Mode Edit		Defaults			
Func. Code (WOP)	Name	Description	A	B	Initial data standard 200/400	Initial data CHN 200/400	Initial data EU 200/400	Page
d080 (Trip Counter)	Trip counter	0. to 65535. (counts)	✕	✕	–	–	–	7 - 7
d081 (ERR1)	Trip monitoring 1	Factor, frequency (Hz), current (A), DC bus voltage (VDC), running time (hr), power-on time (hr)	✕	✕	–	–	–	7 - 8
d082 (ERR2)	Trip monitoring 2		✕	✕	–	–	–	
d083 (ERR3)	Trip monitoring 3		✕	✕	–	–	–	
d084 (ERR4)	Trip monitoring 4		✕	✕	–	–	–	
d085 (ERR5)	Trip monitoring 5		✕	✕	–	–	–	
d086 (ERR6)	Trip monitoring 6		✕	✕	–	–	–	
d090 (WARN)	Warning monitoring	Warning code	✕	✕	–	–	–	7 - 8
d102 (DC Voltage)	DC bus voltage monitoring	0.0 to 1000.0 (VDC)	✕	✕	–	–	–	7 - 8
d104 (E.Thermal)	Electronic thermal overload monitoring	0.0 to 100.0 (%)	✕	✕	–	–	–	7 - 8

13.1.5 Function mode (Display of WOP)

"F" Function			Run Mode Edit		Defaults			
Func. Code (WOP)	Name	Description	A	B	Initial data standard 200/400	Initial data CHN 200/400	Initial data EU 200/400	Page
F001 (Set Frequency)	Output frequency setting	Standard default target frequency that determines motor rated speed. Range: 0.00 / start frequency (b082) to maximum frequency (A004/A204) (Hz), or 0.0 to 100.0 (%) (when PID function is enabled)	✓	✓	0.00	←	←	7 - 9
F002 (Accel.time1)	Acceleration time (1)	Standard default acceleration time. Range: 0.00 to 3600.00 seconds.	✓	✓	10.00	←	←	7 - 13
F202 (Accel.time1-M2)	Acceleration time (1), 2nd motor		✓	✓	10.00	←	←	
F003 (Decel.time1)	Deceleration time (1)	Standard default deceleration time. Range: 0.00 to 3600.00 seconds.	✓	✓	10.00	←	←	
F203 (Decel.time1-M2)	Deceleration time (1), 2nd motor		✓	✓	10.00	←	←	
F004 (RUN key direction)	RUN key routing	00…FWD 01…REV	✗	✗	00	←	←	7 - 12

"A" Function			Run Mode Edit		Defaults			
Func. Code (WOP)	Name	Description	A	B	Initial data standard 200/400	Initial data CHN 200/400	Initial data EU 200/400	Page
A001 (Frequency source)	Frequency source	00…VR 01…Terminal 02…Operator 03…Modbus 10…Math	✗	✗	01	←	←	7 - 9
A201 (Frequency source-M2)	Frequency source, 2nd motor		✗	✗	01	←	←	
A002 (RUN cmd source)	Run command source	01…Terminal 02…Operator 03…Modbus	✗	✗	01	←	←	7 - 12
A202 (RUN cmd source-M2)	Run command source, 2nd motor		✗	✗	01	←	←	
A003 (Base Frequency)	Base frequency	Range: 30.0 to the maximum frequency (A004) (Hz)	✗	✗	60.0 *3)	50.0 *3)	50.0 *3)	7 - 14
A203 (Base Frequency-M2)	Base frequency, 2nd motor	Range: 30.0 to the maximum frequency, 2nd motor (A204) (Hz)	✗	✗	60.0	50.0	50.0	
A004 (Max. Frequency)	Maximum frequency	Range: the base frequency (A003) to 400.0 (Hz)	✗	✗	60.0 *3)	50.0 *3)	50.0 *3)	7 - 16
A204 (Max. Frequency -M2)	Maximum frequency, 2nd motor	Range: the base frequency, 2nd motor (A203) to 400.0 (Hz)	✗	✗	60.0	50.0	50.0	
A011 ([O/OI] start FQ)	[O/OI] input active range start frequency	The output frequency corresponding to the analog input range starting point. Range: 0.00 to 400.00 (Hz)	✗	✓	0.00	←	←	7 - 23
A012 ([O/OI] end FQ)	[O/OI] input active range end frequency	The output frequency corresponding to the analog input range ending point. Range: 0.00 to 400.00 (Hz)	✗	✓	0.00	←	←	
A013 ([O/OI] start %)	[O/OI] input active range start ratio	The starting point (offset) for the active analog input range. Range: 0. to A014 (%)	✗	✓	0.	←	←	
A014 ([O/OI] end %)	[O/OI] input active range end ratio	The ending point (offset) for the active analog input range. Range: A013 to 100. (%)	✗	✓	100.	←	←	
A015 ([O/OI] start FQ select)	[O/OI] input start frequency enable	00…Start FQ 01…0Hz	✗	✓	01	←	←	
A016 (Analog-in filter)	Analog input filter	Range: 1. to 30. : ×2 ms filter 31. : 500 ms fixed filter with ±0.1 Hz hys.	✗	✓	31.	8.	31.	7 - 21
A019 (Multispeed select)	Multi-speed operation selection	00...Binary (8) 01...Bit (4)	✗	✗	00	←	←	7 - 33

*3) The initial data for PM mode will be different.

"A" Function			Run Mode Edit		Defaults			
Func. Code (WOP)	Name	Description	A	B	Initial data standard 200/400	Initial data CHN 200/400	Initial data EU 200/400	Page
A020 (Multispeed 0)	Multi-speed frequency 0	Define the first speed of a multi-speed function. Range: 0.00 / start frequency (b082) to maximum frequency (A004) (Hz)	✓	✓	0.00	←	←	7 - 33
A220 (Multispeed 0-M2)	Multi-speed frequency 0, 2nd motor	Define the first speed of a multi-speed function for 2nd motor. Range: 0.00 / start frequency (b082) to maximum frequency, 2nd motor (A204) (Hz)	✓	✓	0.00	←	←	
A021 to A027 (Multispeed 1 to Multispeed 7)	Multi-speed frequency 1 to 7 (for both motors)	Define 7 more speeds of a multi-speed function. Range: 0.00 / start frequency (b082) to maximum frequency (A004/A204) (Hz)	✓	✓	See next row	←	←	
		A021	✓	✓	60.00	50.00	50.00	
		A022	✓	✓	40.00	35.00	35.00	
		A023	✓	✓	20.00	←	←	
		A024 to A027	✓	✓	0.00	←	←	
A038 (Jog frequency)	Jog frequency	Define limited speed for jogging operation. Range: start frequency (b082) to 9.99 (Hz)	✓	✓	6.00	←	←	7 - 30
A039 (Jog stop mode)	Jog stop mode	Define how to stop the motor at end of jogging operation. 00…FRS 01…DEC 02…DB 03…FRS(RUN) 04…DEC(RUN) 05…DB(RUN)	✗	✓	04	←	←	
A041 (TRQ boost sel)	Torque boost selection	00…Manual 01…Auto	✗	✗	00	←	←	7 - 27
A241 (TRQ boost sel-M2)	Torque boost selection, 2nd motor		✗	✗	00	←	←	
A042 (TRQ boost V%)	Manual torque boost value	Set the boost starting torque between 0 and 20 % above normal V/f curve. Range: 0.0 to 20.0 (%) (Ratio to A082/A282)	✓	✓	1.0	3.0	1.0	
A242 (TRQ boost V%-M2)	Manual torque boost value, 2nd motor		✓	✓	1.0	3.0	1.0	
A043 (TRQ boost FQ%)	Manual torque boost frequency	Set the frequency of the V/f breakpoint for torque boost. Range: 0.0 to 50.0 (%) (Ratio to A003/A203)	✓	✓	5.0	←	←	
A243 (TRQ boost FQ%-M2)	Manual torque boost frequency, 2nd motor		✓	✓	5.0	←	←	

"A" Function			Run Mode Edit		Defaults			
Func. Code (WOP)	Name	Description	A	B	Initial data standard 200/400	Initial data CHN 200/400	Initial data EU 200/400	Page
A044 (V/F select)	V/f characteristic curve	Three available V/f curves. 00…VC 01…VP 02…Free-V/F	✗	✗	00	←	←	7 - 25
A244 (V/F select-M2)	V/f characteristic curve, 2nd motor		✗	✗	00	←	←	
A045 (V/F gain)	V/f gain	Set the inverter output voltage gain. Range: 20. to 100. (%)	✓	✓	100.	←	←	7 - 39
A245 (V/F gain-M2)	V/f gain, 2nd motor		✓	✓	100.	←	←	
A046 (A.TQ-BST V gain)	Voltage compensation gain for automatic torque boost	Set voltage compensation gain under automatic torque boost. Range: 0. to 255. (%)	✓	✓	100.	←	←	7 - 27
A246 (A.TQ-BST V gain-M2)	Voltage compensation gain for automatic torque boost, 2nd motor		✓	✓	100.	←	←	
A047 (A.TQ-BST SL gain)	Slip compensation gain for automatic torque boost	Set slip compensation gain under automatic torque boost. Range: 0. to 255. (%)	✓	✓	100.	←	←	
A247 (A.TQ-BST SL gain-M2)	Slip compensation gain for automatic torque boost, 2nd motor		✓	✓	100.	←	←	
A051 (DB enable)	DC braking enable	00…OFF 01…ON 02…ON(FQ)	✗	✓	00	←	←	7 - 46
A052 (DB Frequency)	DC braking frequency	The frequency at which DC braking begins. Range: 0.00 to 60.00 (Hz)	✗	✓	0.50	←	←	
A053 (DB wait time)	DC braking wait time	The delay from the end of controlled deceleration to start of DC braking (motor free runs until DC braking begins). Range: 0.0 to 5.0 seconds.	✗	✓	0.0	←	←	
A054 (DB force)	DC braking force for deceleration	Level of DC braking force. Range: 0. to 100. (%)	✗	✓	50.	←	←	
A055 (DB decel time)	DC braking time for deceleration	Set the duration for DC braking. Range: 0.0 to 10.0 seconds.	✗	✓	0.5	←	←	
A056 (DB input select)	DC braking / edge or level detection for [DB] input	00…Edge 01…Level	✗	✓	01	←	←	
A057 (DB force start)	DC braking force at start	Level of DC braking force at start. Range: 0. to 100. (%)	✗	✓	0.	←	←	

"A" Function			Run Mode Edit		Defaults			
Func. Code (WOP)	Name	Description	A	B	Initial data standard 200/400	Initial data CHN 200/400	Initial data EU 200/400	Page
A058 (DB time start)	DC braking time at start	Set the duration for DC braking at start. Range: 0.0 to 10.0 seconds.	✗	✓	0.0	←	←	7 - 46
A059 (DB carrier FQ)	Carrier frequency during DC braking	Carrier frequency of DC braking performance. Range: 2.0 to 15.0 (kHz)	✗	✓	2.0	←	←	
A061 (FQ upper limit)	Frequency upper limit	Set the upper limit on output frequency. Range: frequency lower limit (A062) to maximum frequency (A004) (Hz). 0.00 setting disables frequency limit function.	✗	✓	0.00	←	←	7 - 31
A261 (FQ upper limit-M2)	Frequency upper limit, 2nd motor	Set the upper limit on output frequency for 2nd motor. Range: frequency lower limit, 2nd motor (A262) to maximum frequency, 2nd motor (A204) (Hz). 0.00 setting disables frequency limit function.	✗	✓	0.00	←	←	
A062 (FQ lower limit)	Frequency lower limit	Set the lower limit on output frequency. Range: start frequency (b082) to frequency upper limit (A061) (Hz). 0.00 setting disables frequency limit function.	✗	✓	0.00	←	←	
A262 (FQ lower limit-M2)	Frequency lower limit, 2nd motor	Set the lower limit on output frequency for 2nd motor. Range: start frequency (b082) to frequency upper limit, 2nd motor (A261) (Hz). 0.00 setting disables frequency limit function.	✗	✓	0.00	←	←	
A063 (Jump FQ1 Center) A065 (Jump FQ2 Center) A067 (Jump FQ3 Center)	Jump frequency (center) 1 to 3	Up to 3 output frequencies can be defined for the output to jump passed to avoid motor resonances (center frequency). Range: 0.00 to 400.00 (Hz)	✗	✓	0.00 0.00 0.00	←	←	
A064 (Jump FQ1 Width) A066 (Jump FQ2 Width) A068 (Jump FQ3 Width)	Jump frequency width (hysteresis) 1 to 3	Define the distance from the center frequency at which the jump occurs. Range: 0.00 to 10.00 (Hz)	✗	✓	0.50 0.50 0.50	←	←	

"A" Function			Run Mode Edit		Defaults			
Func. Code (WOP)	Name	Description	A	B	Initial data standard 200/400	Initial data CHN 200/400	Initial data EU 200/400	Page
A069 (Accel hold FQ)	Acceleration hold frequency	Set the frequency to hold acceleration. Range: 0.00 to 400.00 (Hz)	✗	✓	0.00	←	←	7 - 32
A070 (Accel hold time)	Acceleration hold time	Set the duration of acceleration hold. Range: 0.0 to 60.0 seconds.	✗	✓	0.0	←	←	
A071 (PID enable)	PID enable	00…OFF 01…ON(+) 02…ON(+/-)	✗	✓	00	←	←	7 - 40
A072 (PID P gain)	PID proportional gain	PID proportional gain. Range: 0.00 to 25.00	✓	✓	1.00	←	←	
A073 (PID I gain)	PID integral time constant	PID integral time constant. Range: 0.0 to 3600.0 seconds.	✓	✓	1.0	←	←	
A074 (PID D gain)	PID derivative time constant	PID derivative time constant. Range: 0.00 to 100.00 seconds.	✓	✓	0.00	←	←	
A075 (PV scale convert)	PV scale conversion	Process Variable (PV) scale factor (multiplier). Range: 0.01 to 99.99	✗	✓	1.00	←	←	
A076 (PV source select)	PV source	Selects source of Process Variable (PV). 01…[O/OI] 02…Modbus 10…Math	✗	✓	01	←	←	
A077 (Reverse PID action)	Reverse PID action	00…OFF 01…ON	✗	✓	00	←	←	
A078 (PID limit)	PID variation range	Set the range of PID data variation with reference to the target value. Range: 0.0 to 100.0 (%)	✗	✓	0.0	←	←	
A081 (AVR select)	AVR function selection	Automatic (output) voltage regulation, select from three type of AVR functions. 00…ON 01…OFF 02…Decel-OFF	✗	✗	02	01	02	7 - 14
A281 (AVR select-M2)	AVR function selection, 2nd motor		✗	✗	02	01	02	
A082 (AVR voltage sel)	AVR voltage selection	200 V class inverter settings: 200/215/220/230/240 (V) 400 V class inverter settings: 380/400/415/440/460/480 (V)	✗	✗	200 / 400	220 / 380	230 / 400	
A282 (AVR voltage sel-M2)	AVR voltage selection, 2nd motor		✗	✗	200 / 400	220 / 380	230 / 400	
A083 (AVR filter time)	AVR filter time constant	Define the time constant of the AVR filter. Range: 0.000 to 1.000 seconds.	✗	✓	0.030	←	←	
A084 (OED voltage gain)	AVR deceleration gain	The gain adjustment of the braking performance. Range: 50. to 200. (%)	✗	✓	100.	←	←	

"A" Function			Run Mode Edit		Defaults			
Func. Code (WOP)	Name	Description	A	B	Initial data standard 200/400	Initial data CHN 200/400	Initial data EU 200/400	Page
A085 (Energy-saving mode)	Energy-saving operation mode	00…Normal 01…Eco	✗	✗	00	←	←	7 - 44
A086 (Energy-saving tune)	Energy-saving mode tuning	Range: 0.0 to 100.0 (%)	✓	✓	50.0	←	←	
A092 (Accel.time2)	Acceleration time (2)	Duration of 2nd segment of acceleration. Range: 0.00 to 3600.00 seconds.	✓	✓	10.00	←	←	7 - 35
A292 (Accel.time2-M2)	Acceleration time (2), 2nd motor		✓	✓	10.00	←	←	7 - 35
A093 (Decel.time2)	Deceleration time (2)	Duration of 2nd segment of deceleration. Range: 0.00 to 3600.00 seconds.	✓	✓	10.00	←	←	
A293 (Decel.time2-M2)	Deceleration time (2), 2nd motor		✓	✓	10.00	←	←	
A094 (Acc2/Dec2 sel)	Selection method to switch to Acc2/Dec2 profile	Three options for switching from 1st to 2nd acceleration / deceleration. 00…2CH-Terminal 01…Preset FQ 02…FWD-REV	✗	✗	00	←	←	
A294 (Acc2/Dec2 sel-M2)	Selection method to switch to Acc2/Dec2 profile, 2nd motor		✗	✗	00	←	←	
A095 (Acc1-2 FQ)	Acc1 to Acc2 frequency transition point	Output frequency at which Acc1 switches to Acc2. Range: 0.00 to 400.00 (Hz)	✗	✗	0.00	←	←	
A295 (Acc1-2 FQ-M2)	Acc1 to Acc2 frequency transition point, 2nd motor		✗	✗	0.00	←	←	
A096 (Dec1-2 FQ)	Dec2 to Dec1 frequency transition point	Output frequency at which Dec2 switches to Dec1. Range: 0.00 to 400.00 (Hz)	✗	✗	0.00	←	←	
A296 (Dec1-2 FQ-M2)	Dec2 to Dec1 frequency transition point, 2nd motor		✗	✗	0.00	←	←	
A097 (Accel.curve select)	Acceleration curve selection	Set the characteristic curve of Acc1 and Acc2. 00…Linear 01…S curve 02…U curve 03…inv.U curve	✗	✗	00	←	←	7 - 36
A098 (Decel.curve select)	Deceleration curve selection	Set the characteristic curve of Dec1 and Dec2. Options are same as above A097.	✗	✗	00	←	←	
A131 (Accel.curve const)	Acceleration curve constant	Range: 01 to 10	✗	✓	02	←	←	
A132 (Decel.curve const)	Deceleration curve constant	Range: 01 to 10	✗	✓	02	←	←	

"A" Function			Run Mode Edit		Defaults			
Func. Code (WOP)	Name	Description	A	B	Initial data standard 200/400	Initial data CHN 200/400	Initial data EU 200/400	Page
A141 (A-input calc.FQ)	A input selection for calculate function	00…Operator 01…VR 02…[O/OI] 04…Modbus	✗	✓	00	←	←	7 - 37
A142 (B-input calc.FQ)	B input selection for calculate function	00…Operator 01…VR 02…[O/OI] 04…Modbus	✗	✓	02	←	←	
A143 (Calculation symbol)	Calculation symbol	Set the operator between A input source (A141 selects) and B input source (A142 selects). 00…ADD 01…SUB 02…MUL	✗	✓	00	←	←	
A145 (Add frequency)	ADD frequency	An offset value that is applied to the output frequency when the [ADD] terminal is ON. Range: 0.00 to 400.00 (Hz)	✗	✓	0.00	←	←	7 - 38
A146 (Add direction)	ADD direction selection	00…ADD 01…SUB	✗	✓	00	←	←	
A154 (Decel hold FQ)	Deceleration hold frequency	Set the frequency to hold deceleration. Range: 0.00 to 400.00 (Hz)	✗	✓	0.00	←	←	7 - 32
A155 (Decel hold time)	Deceleration hold time	Set the duration of deceleration hold. Range: 0.0 to 60.0 seconds.	✗	✓	0.0	←	←	
A156 (PID sleep level)	PID sleep function action threshold	Set the starting threshold for the PID sleep function. Range: 0.00 to 400.00 (Hz)	✗	✓	0.00	←	←	7 - 40
A157 (PID sleep delay)	PID sleep function action delay time	Set the delay time for the PID sleep function to start. Range: 0.0 to 25.5 seconds.	✗	✓	0.0	←	←	
A158 (PID sleep Release)	PID sleep function return threshold	Set the ending threshold for the PID sleep function. Range: 0.00 to 400.0 (Hz)	✗	✓	0.00	←	←	
A161 (VR start FQ)	[VR] input active range start frequency	The output frequency corresponding to the [VR] input range starting point. Range: 0.00 to 400.00 (Hz)	✗	✓	0.00	←	←	7 - 23
A162 (VR end FQ)	[VR] input active range end frequency	The output frequency corresponding to the [VR] input range ending point. Range: 0.00 to 400.00 (Hz)	✗	✓	0.00	←	←	
A163 (VR start %)	[VR] input active range start ratio	The starting point (offset) for the [VR] input range. Range: 0. to A164 (%)	✗	✓	0.	←	←	
A164 (VR end %)	[VR] input active range end ratio	The ending point (offset) for the [VR] input range. Range: A163 to 100. (%)	✗	✓	100.	←	←	
A165 (VR start FQ select)	[VR] input start frequency enable	00…Start FQ 01…0Hz	✗	✓	01	←	←	

"b" Function			Run Mode Edit		Defaults			
Func. Code (WOP)	Name	Description	A	B	Initial data standard 200/400	Initial data CHN 200/400	Initial data EU 200/400	Page
b001 (Restart mode UV)	Restart mode on undervoltage trip	Select inverter restart method. 00…TRIP 01…0Hz Start 02…f-match 03…f-match-Trip	✗	✓	00	←	←	7 - 55
b002 (Allowable UV time)	Allowable undervoltage time	Set the amount of time a power input undervoltage can occur without trip. Range: 0.3 to 25.0 seconds. If undervoltage occurs longer than this time, the inverter trips even if the restart mode is selected.	✗	✓	1.0	←	←	
b003 (Retry wait time UV)	Retry wait time before motor restart	Set the delay time from undervoltage condition going away to the inverter restarting. Range: 0.3 to 100.0 seconds.	✗	✓	1.0	←	←	
b004 (UV trip on stop)	Instantaneous undervoltage trip alarm enable	00…OFF 01…ON 02…Decel-OFF	✗	✓	00	←	←	
b005 (No. of restart UV)	Number of restarts on undervoltage trip	00…16 times 01…No limit	✗	✓	00	←	←	
b007 (Restart min.FQ)	Restart frequency threshold	Set the frequency the motor restarts from 0 Hz at free-running status. Range: 0.00 to 400.00 (Hz)	✗	✓	0.50	←	←	
b008 (Restart mode OV/OC)	Restart mode on overvoltage / overcurrent trip	Select inverter restart method. 00…TRIP 01…0Hz Start 02…f-match 03…f-match-Trip	✗	✓	00	←	←	7 - 57
b010 (No. of restart OV/OC)	Number of retry on overvoltage / overcurrent trip	Range: 1 to 3 times	✗	✓	3	←	←	
b011 (Retry wait time OV/OC)	Retry wait time on overvoltage / overcurrent trip	Range: 0.3 to 100.0 seconds.	✗	✓	1.0	←	←	
b012 (E.Thermal Level)	Level of electronic thermal	Set a level of electronic thermal. Range: (0.20 to 1.00) × inverter rated current Amps.	✗	✓	1.00 × inverter rated current	←	←	7 - 67
b212 (E.Thermal Level-M2)	Level of electronic thermal, 2nd motor		✗	✓	1.00 × inverter rated current	←	←	
b013 (E.Thermal Character)	Electronic thermal characteristic	00…Reduced TRQ 01…Const TRQ 02…Free set	✗	✓	01	←	←	
b213 (E.Thermal Charact-M2)	Electronic thermal characteristic, 2nd motor		✗	✓	01	←	←	

"b" Function			Run Mode Edit		Defaults			
Func. Code (WOP)	Name	Description	A	B	Initial data standard 200/400	Initial data CHN 200/400	Initial data EU 200/400	Page
b015 (Free E.Thermal FQ-1)	Free setting electronic thermal frequency 1	Range: 0. to b017 (Hz)	✗	✓	0.	←	←	7 - 68
b016 (Free E.Thermal I-1)	Free setting electronic thermal current 1	Range: (0.00 to 1.00) × inverter rated current Amps.	✗	✓	0.00	←	←	
b017 (Free E.Thermal FQ-2)	Free setting electronic thermal frequency 2	Range: b015 to b019 (Hz)	✗	✓	0.	←	←	
b018 (Free E.Thermal I-2)	Free setting electronic thermal current 2	Range: (0.00 to 1.00) × inverter rated current Amps.	✗	✓	0.00	←	←	
b019 (Free E.Thermal FQ-3)	Free setting electronic thermal frequency 3	Range: b017 to 400. (Hz)	✗	✓	0.	←	←	
b020 (Free E.Thermal I-3)	Free setting electronic thermal current 3	Range: (0.00 to 1.00) × inverter rated current Amps.	✗	✓	0.00	←	←	
b021 (OL restrict mode)	Overload restriction operation mode	Select the restriction operation mode during overload conditions. 00…OFF 01…ON-Acc/Cnst 02…ON-Cnst	✗	✓	01	←	←	7 - 69
b221 (OL restrict mode-M2)	Overload restriction operation mode, 2nd motor		✗	✓	01	←	←	
b022 (OL restrict level)	Overload restriction level	Set the level of overload restriction. Range: (0.20 to 2.00) × inverter rated current Amps.	✗	✓	1.50 × inverter rated current	←	←	
b222 (OL restrict level-M2)	Overload restriction level, 2nd motor		✗	✓	1.50 × inverter rated current	←	←	
b023 (Decel.rate OL restrict)	Deceleration rate at overload restriction	Set the deceleration rate when inverter detects over b022 / b222. Range: 0.1 to 3000.0 seconds.	✗	✓	1.0	←	←	
b223 (Decel.rate OL rstr-M2)	Deceleration rate at overload restriction, 2nd motor		✗	✓	1.0	←	←	
b024 (OL restrict 2 mode)	Overload restriction operation mode 2	Select the restriction operation mode during overload conditions. 00…OFF 01…ON-Acc/Cnst 02…ON-Cnst	✗	✓	01	←	←	
b025 (OL restrict 2 level)	Overload restriction level 2	Set the level of overload restriction. Range: (0.20 to 2.00) × inverter rated current Amps.	✗	✓	1.50 × inverter rated current	←	←	
b026 (Decel.rate OL 2 rstr)	Deceleration rate 2 at overload restriction	Set the deceleration rate when inverter detects over b025. Range: 0.1 to 3000.0 seconds.	✗	✓	1.0	←	←	

"b" Function			Run Mode Edit		Defaults			
Func. Code (WOP)	Name	Description	A	B	Initial data standard 200/400	Initial data CHN 200/400	Initial data EU 200/400	Page
b027 (OC suppress select)	OC suppression selection	00…OFF 01…ON	✗	✓	01	←	←	7 - 70
b028 (Curnt Active F-match)	Current level of active frequency matching	Set the current level of active frequency matching restart. Range: (0.20 to 2.00) × inverter rated current Amps.	✗	✓	1.00 × inverter rated current	←	←	7 - 55
b029 (Decel.rate act.F-match)	Deceleration rate of active frequency matching	Set the deceleration rate when active frequency matching restart. Range: 0.1 to 3000.0 seconds.	✗	✓	0.5	←	←	
b030 (Start FQ act.F-match)	Start frequency of active frequency matching	00…Off FQ 01…Max.FQ 02…Set FQ	✗	✓	00	←	←	
b031 (Softlock select)	Software lock mode selection	Prevents parameter changes. 00…Lock(SFT) 01…Only FQ(SFT) 02…Lock 03…Only FQ 10…RUN chg mode See the "Run Mode Edit - B" column in the table in this chapter for the accessible parameters in this high level access mode.	✗	✓	01	10	01	7 - 50
b034 (RNT/ONT time)	Run/power ON warning time	Range: 0. (Warning disabled), 1. to 65535. (× 10 hrs)	✗	✓	0.	←	←	7 - 76
b035 (Rotation restrction)	Rotation direction restriction	00…Free 01…FWD 02…REV	✗	✗	00	←	←	7 - 12
b036 (Reduced V start)	Reduced voltage start selection	Range: 0 (the function disabled), 1 (approx. 4 ms) to 250 (approx. 1 sec)	✗	✓	3	←	←	7 - 29
b037 (Display restriction)	Function code display restriction	00…All 01…Utilized 03…Compare 04…Basic 05…Monitor	✗	✓	00	←	←	7 - 53
b038 (Initial display)	Initial display selection	000…Func. code that SET key pressed last displayed 001 to 060…d001 to d060 displayed 201…F001 displayed 202…B display of WOP	✗	✓	001	←	←	7 - 52

"b" Function			Run Mode Edit		Defaults			
Func. Code (WOP)	Name	Description	A	B	Initial data standard 200/400	Initial data CHN 200/400	Initial data EU 200/400	Page
b050 (Ctrld decel.select)	Controlled deceleration on power loss selection	00…OFF 01…ON 02…V-Cnst(STOP) 03…V-Cnst(RUN)	✗	✗	00	←	←	7 - 64
b051 (DC Volt ctrld.decel)	DC bus voltage trigger level of controlled deceleration	Set the DC bus voltage that starts controlled deceleration operation. Range: 0.0 to 400.0 / 800.0 (VDC)	✗	✗	220.0/ 440.0	←	←	
b052 (OV lvl ctrld.decel)	Overvoltage threshold of controlled deceleration	Set the OV-LAD stop level of controlled deceleration operation. Range: 0.0 to 400.0 / 800.0 (VDC)	✗	✗	360.0/ 720.0	←	←	7 - 64
b053 (Decel time ctrld.dec)	Deceleration time of controlled deceleration	Range: 0.01 to 300.00 seconds.	✗	✗	1.00	←	←	
b054 (FQ drop ctrld.decel)	Initial frequency drop of controlled deceleration	Set the initial frequency drop of controlled deceleration. Range: 0.00 to 10.00 (Hz)	✗	✗	0.00	←	←	
b060 (Windw comp [O/OI] max)	Maximum-limit level of window comparator (O/OI)	Range: {b061+(b062 × 2)} to 100. (%)	✓	✓	100.	←	←	7 - 81
b061 (Windw comp [O/OI] min)	Minimum-limit level of window comparator (O/OI)	Range: 0. to {b060 - (b062 × 2)} (%)	✓	✓	0.	←	←	
b062 (Windw comp [O/OI] hys)	Hysteresis width of window comparator (O/OI)	Range: 0. to {(b060 - b061) / 2} (%) (Maximum of 10 %)	✓	✓	0.	←	←	
b070 (Discon Level)	Operation level at O/OI disconnection	Range: 0 to 100 (%), or "no" (ignore)	✗	✓	no	←	←	
b078 (Clear kWh data)	Cumulative power clearance	00…OFF 01…CLR	✓	✓	00	←	←	7 - 6
b079 (kWh display gain)	Cumulative power display gain	Range: 1. to 1000.	✓	✓	1.	←	←	
b082 (Start Frequency)	Start frequency	Set the starting frequency for the inverter output. Range: 0.01 to 9.99 (Hz)	✗	✓	0.50	←	←	7 - 29
b083 (Carrier Frequency)	Carrier frequency	Set the PWM carrier frequency (internal switching frequency). Range: 2.0 to 15.0 (kHz) (The settings may require a derating of the output current. See section 12.3.)	✗	✓	2.0 *4)	←	←	7 - 16

*4) The initial data for PM mode will be different.

"b" Function			Run Mode Edit		Defaults			
Func. Code (WOP)	Name	Description	A	B	Initial data standard 200/400	Initial data CHN 200/400	Initial data EU 200/400	Page
b084 (Initialize Mode)	Initialization mode (parameters or trip history)	Select initialized data. 00…no 01…Trip data 02…Parameters 03…Trip+Param	✗	✗	00	←	←	7 - 83
b085 (Initial data select)	Initial data selection	Select default parameter values on initialization. 00…Mode0 01…Mode1 03…Mode3	✗	✗	00	03	01	
b086 (FQ scale factor)	Frequency scaling conversion factor	Specify a constant to scale the displayed frequency for d007 monitor. Range: 0.01 to 99.99	✓	✓	1.00	←	←	7 - 5
b087 (STOP key enable)	STOP/RESET key enable	Select whether the STOP/RESET key is enabled. 00…ON 01…OFF 02…Only RESET	✗	✓	00	←	←	7 - 50
b088 (Restart after FRS)	Restart mode after FRS	Selects how the inverter resumes operation when free-run stop (FRS) is cancelled. 00…0Hz Start 01…Actv.f-match	✗	✓	00	←	←	7 - 62
b089 (Auto.Carrier reduce)	Automatic carrier frequency reduction	00…OFF 01…ON(current) 02…ON(heatsink)	✗	✗	00	←	←	7 - 73
b091 (Stop mode select)	Stop mode selection	00…Decel-Stop 01…Free RUN	✗	✓	00	←	←	7 - 13
b094 (Initial target data)	Initialization target data setting	00…All 01…Exp.COM,TERM	✗	✗	00	←	←	7 - 83
b100 (Free V/F -F1)	Free V/f setting, frequency 1	Range: 0. to b102 (Hz)	✗	✗	0.	←	←	7 - 26
b101 (Free V/F -V1)	Free V/f setting, voltage 1	Range: 0.0 to 300.0 / 600.0 (V)	✗	✗	0.0	←	←	
b102 (Free V/F -F2)	Free V/f setting, frequency 2	Range: b100 to b104 (Hz)	✗	✗	0.	←	←	
b103 (Free V/F -V2)	Free V/f setting, voltage 2	Range: 0.0 to 300.0 / 600.0 (V)	✗	✗	0.0	←	←	
b104 (Free V/F -F3)	Free V/f setting, frequency 3	Range: b102 to b106 (Hz)	✗	✗	0.	←	←	
b105 (Free V/F -V3)	Free V/f setting, voltage 3	Range: 0.0 to 300.0 / 600.0 (V)	✗	✗	0.0	←	←	
b106 (Free V/F -F4)	Free V/f setting, frequency 4	Range: b104 to b108 (Hz)	✗	✗	0.	←	←	
b107 (Free V/F -V4)	Free V/f setting, voltage 4	Range: 0.0 to 300.0 / 600.0 (V)	✗	✗	0.0	←	←	

"b" Function			Run Mode Edit		Defaults			
Func. Code (WOP)	Name	Description	A	B	Initial data standard 200/400	Initial data CHN 200/400	Initial data EU 200/400	Page
b108 (Free V/F -F5)	Free V/f setting, frequency 5	Range: b106 to b110 (Hz)	✗	✗	0.	←	←	7 - 26
b109 (Free V/F -V5)	Free V/f setting, voltage 5	Range: 0.0 to 300.0 / 600.0 (V)	✗	✗	0.0	←	←	
b110 (Free V/F -F6)	Free V/f setting, frequency 6	Range: b108 to b112 (Hz)	✗	✗	0.	←	←	
b111 (Free V/F -V6)	Free V/f setting, voltage 6	Range: 0.0 to 300.0 / 600.0 (V)	✗	✗	0.0	←	←	
b112 (Free V/F -F7)	Free V/f setting, frequency 7	Range: b110 to 400. (Hz)	✗	✗	0.	←	←	
b113 (Free V/F -V7)	Free V/f setting, voltage 7	Range: 0.0 to 300.0 / 600.0 (V)	✗	✗	0.0	←	←	
b130 (Over-V supp.select)	Deceleration overvoltage suppression enable	00…OFF 01…V-const 02…Accel 03…Acc/Cnst	✗	✓	00	←	←	7 - 71
b131 (Over-V supp.level)	Deceleration overvoltage suppression level	DC bus voltage of suppression starting. Range: 330. to 390. / 660. to 780. (VDC)	✗	✓	360. / 720.	←	←	
b132 (Over-V supp.const)	Deceleration overvoltage suppression const.	Acceleration rate when b130=02,03. Range: 0.10 to 30.00 seconds.	✗	✓	1.00	←	←	
b133 (Over-V supp.P-gain)	Deceleration overvoltage suppression proportional gain	Proportional gain when b130=01. Range: 0.00 to 5.00	✓	✓	0.20	←	←	
b134 (Over-V supp.I-gain)	Deceleration overvoltage suppression integral time	Integral time when b130=01. Range: 0.0 to 150.0 seconds.	✓	✓	1.0	←	←	
b150 (Disp.ex.ope connected)	Display external operator connected	When an external operator is connected via RS-422 port, the NES1-OP is locked and shows only one "d" parameter. Range: 001 to 060	✓	✓	001	←	←	7 - 52
b160 (1st data of d050)	1st parameter of Dual Monitor	Set any two "d" parameters in b160 and b161, then they can be monitored in d050. The two parameters are switched by up/down keys. Range: 001 to 018	✓	✓	001	←	←	7 - 7
b161 (2nd data of d050)	2nd parameter of Dual Monitor		✓	✓	002	←	←	
b163 (FQ set in monitor)	Frequency set in monitoring	00…OFF 01…ON	✓	✓	01	←	←	7 - 3

"b" Function			Run Mode Edit		Defaults			
Func. Code (WOP)	Name	Description	A	B	Initial data standard 200/400	Initial data CHN 200/400	Initial data EU 200/400	Page
b164 (Auto return init.disp)	Automatic return to the initial display	After 10 minutes from the last key operation, display returns to the initial parameter set by b038. 00…OFF 01…ON	✓	✓	00	←	←	7 - 52
b165 (Ex.ope comm loss act)	Operation at external operator connection loss	00…Trip 01…Decel-Trip 02…Ignore 03…Free RUN 04…Decel-Stop	✓	✓	02	←	←	7 - 51
b166 (Data R/W select)	Data Read/Write selection	00…R/W OK 01…R/W protected	✗	✓	00	←	←	7 - 52
b171 (Inverter mode select) *5)	Inverter mode selection	00…No 01…Std.IM 03…PM	✗	✗	00	←	←	7 - 86
b180 (Initialize trigger)	Initialization trigger	Select to perform initialization or not. 00…No action 01…Initialize	✗	✗	00	←	←	7 - 83

*5) It is displayed in NE-S1 Ver. 2.0 or later.

"C" Function			Run Mode Edit		Defaults			
Func. Code (WOP)	Name	Description	A	B	Initial data standard 200/400	Initial data CHN 200/400	Initial data EU 200/400	Page
C001 (Input [1] Function)	Intelligent input [1] function	Select input terminal [1] function from 34 options (see "13.1.6 Input/Output function summary table").	✗	✓	00 [FW]	←	←	7 - 17
C002 (Input [2] Function)	Intelligent input [2] function	Select input terminal [2] function from 34 options (see "13.1.6 Input/Output function summary table").	✗	✓	01 [RV]	←	←	
C003 (Input [3] Function)	Intelligent input [3] function	Select input terminal [3] function from 34 options (see "13.1.6 Input/Output function summary table").	✗	✓	02 [CF1]	←	←	
C004 (Input [4] Function)	Intelligent input [4] function	Select input terminal [4] function from 34 options (see "13.1.6 Input/Output function summary table").	✗	✓	03 [CF2]	←	←	
C005 (Input [5] Function)	Intelligent input [5] function	Select input terminal [5] function from 34 options (see "13.1.6 Input/Output function summary table").	✗	✓	18 [RS]	←	←	
C011 (Input [1] actv. state)	Intelligent input [1] active state	Select logic conversion. 00…Norm.Open 01…Norm.Closed	✗	✓	00	←	←	
C012 (Input [2] actv. state)	Intelligent input [2] active state		✗	✓	00	←	←	
C013 (Input [3] actv. state)	Intelligent input [3] active state		✗	✓	00	←	←	
C014 (Input [4] actv. state)	Intelligent input [4] active state		✗	✓	00	←	←	
C015 (Input [5] actv. state)	Intelligent input [5] active state		✗	✓	00	←	←	
C021 (Output [11] function)	Intelligent Output [11] function	Select output terminal [11] function from 27 programmable functions (see "13.1.6 Input/Output function summary table").	✗	✓	01 [FA1]	←	←	7 - 18
C026 (Alarm relay Function)	Intelligent relay function	Select intelligent relay terminal function from 27 programmable functions (see "13.1.6 Input/Output function summary table").	✗	✓	05 [AL]	←	←	

"C" Function			Run Mode Edit		Defaults			
Func. Code (WOP)	Name	Description	A	B	Initial data standard 200/400	Initial data CHN 200/400	Initial data EU 200/400	Page
C027 ([FM] Function)	[FM] terminal selection (Pulse/PWM output)	00…Output FQ 01…Output I 03…Pulse FQ 04…Output V 05…Power 06…Thermal 07…LAD-FQ 08…Pulse I 10…Heatsink tmp	✗	✓	07	←	←	7 - 24
C030 (Digital I Ref.)	Digital current monitor reference value	Set the current value output pulse frequency is 1440 Hz when C027=08. Range: (0.20 to 2.00) × inverter rated current Amps.	✓	✓	1.00 × inverter rated current	←	←	
C031 (Output [11] actv.state)	Intelligent output [11] active state	Select logic conversion. 00…Norm.Open 01…Norm.Closed	✗	✓	00	←	←	7 - 19
C036 (Alarm RLY active state)	Intelligent relay active state		✗	✓	01	←	←	
C038 (LOC out mode select)	Output mode of low current detection	00…ACC/DEC/CST 01…Const	✗	✓	01	←	←	7 - 79
C039 (LOC out level)	Low current detection level	Set the level of low current detection. Range: (0.00 to 2.00) × inverter rated current Amps.	✓	✓	1.00 × inverter rated current	←	←	
C040 (Overload warn mode)	Output mode of overload warning	00…ACC/DEC/CST 01…Const	✗	✓	01	←	←	7 - 70
C041 (Overload warn level)	Overload warning level	Sets the overload warning signal level. Range: (0.00 to 2.00) × inverter rated current Amps.	✓	✓	1.15 × inverter rated current	←	←	
C241 (Overload warn level-M2)	Overload warning level, 2nd motor		✓	✓	1.15 × inverter rated current	←	←	
C042 (FQ arrive accel.1)	Frequency arrival setting for acceleration	Set the frequency arrival setting threshold for the output frequency during acceleration. Range: 0.00 to 400.00 (Hz)	✗	✓	0.00	←	←	7 - 74
C043 (FQ arrive decel.1)	Frequency arrival setting for deceleration	Set the frequency arrival setting threshold for the output frequency during deceleration. Range: 0.00 to 400.00 (Hz)	✗	✓	0.00	←	←	

"C" Function			Run Mode Edit		Defaults			
Func. Code (WOP)	Name	Description	A	B	Initial data standard 200/400	Initial data CHN 200/400	Initial data EU 200/400	Page
C044 (PID deviation)	PID deviation level	Set the allowable PID deviation (absolute value). Range: 0.0 to 100.0 (%)	✗	✓	3.0	←	←	7 - 40
C052 (PID FBV high limit)	PV comparison signal output high limit	When the PV exceeds this value, the [FBV] function signal turns OFF. Range: 0.0 to 100.0 (%)	✗	✓	100.0	←	←	
C053 (PID FBV low limit)	PV comparison signal output low limit	When the PV goes below this value, the [FBV] function signal turns ON. Range: 0.0 to 100.0 (%)	✗	✓	0.0	←	←	7 - 40
C061 (E.Thermal warning)	Electronic thermal warning level	Range: 0. to 100. (%) (Setting "0." means disabled.)	✗	✓	90.	←	←	7 - 68
C063 (0Hz detection level)	Zero speed detection level	Range: 0.00 to 100.00 (Hz)	✗	✓	0.00	←	←	7 - 76
C064 (Heatsink warning)	Heatsink overheat warning	Range: 0. to 110. (°C)	✗	✓	100.	←	←	7 - 78
C070 (Comm.Select)	Selection of OPE/Modbus	00…OPE 01…Modbus	✗	✗	00	←	←	8 - 6
C071 (Comm.baud rate)	Communication speed	04…4800bps 05…9600bps 06…19.2kbps 07…38.4kbps	✗	✓	05	←	←	
C072 (Modbus address)	Modbus address	Set the address of the inverter on the Modbus network. Range: 1. to 247.	✗	✓	1.	←	←	
C074 (Parity)	Communication parity	00…No 01…Even 02…Odd	✗	✓	00	←	←	
C075 (Stop bit)	Communication stop bit	01…1-bit 02…2-bit	✗	✓	01	←	←	
C076 (Comm.error mode)	Communication error selection	Select inverter response to communication error. 00…Trip 01…Decel-Trip 02…Ignore 03…Free RUN 04…Decel-Stop	✗	✓	02	←	←	
C077 (Comm.timeout)	Communication error detection time	Set the communications watchdog timer period. Range: 0.00 to 99.99 seconds. (Setting "0.00" means disabled.)	✗	✓	0.00	←	←	
C078 (Comm.wait time)	Communication wait time	Set the inverter wait time from receiving a message to transmitting a message. Range: 0. to 1000. milliseconds.	✗	✓	0.	←	←	

"C" Function			Run Mode Edit		Defaults			
Func. Code (WOP)	Name	Description	A	B	Initial data standard 200/400	Initial data CHN 200/400	Initial data EU 200/400	Page
C081 ([O/OI] input adj.)	O/OI input gain calibration	Set the scale factor between the external frequency command on terminals L–O/OI, and the output frequency. Range: 0.0 to 200.0 (%)	✓	✓	100.0	←	←	7 - 22
C091 (-)	(The parameter for factory use)	**(Do not change)**	✓	✓	00	←	←	-
C101 (UP/DWN memory mode)	Up/Down memory mode selection	Select keep the last frequency command adjusted by UP/DWN key or not. 00…Not save 01…Save	✗	✓	00	←	←	7 - 38
C102 (Reset mode select)	Reset selection	Select response method when [RS] terminal turns ON/OFF. 00…ON-RESET 01…OFF-RESET 02…ON in Trip	✓	✓	00	←	←	7 - 60
C103 (Restart after reset)	Restart mode after reset	Select the restart mode after resetting. 00…0Hz Start 01…Actv.f-match	✗	✓	00	←	←	
C104 (UP/DWN clear mode)	UP/DWN clear mode	Select the frequency set value when [UDC] terminal turns to ON. 00…0Hz 01…Pow-ON data	✗	✓	00	←	←	7 - 38
C105 (FM gain adjust)	FM gain adjustment	Range: 50. to 200. (%)	✓	✓	100.	←	←	7 - 24
C130 (Output [11] ON delay)	Intelligent output [11] on delay	Range: 0.0 to 100.0 seconds.	✗	✓	0.0	←	←	7 - 20
C131 (Output [11] OFF delay)	Intelligent output [11] off delay		✗	✓	0.0	←	←	
C140 (Alarm-RLY ON delay)	Intelligent relay output on delay	Range: 0.0 to 100.0 seconds.	✗	✓	0.0	←	←	
C141 (Alarm-RLY OFF delay)	Intelligent relay output off delay		✗	✓	0.0	←	←	
C142 (Log.out 1 operand A)	Logic output operand A	Select from all the programmable functions available for logic outputs except LOG, NO.	✗	✓	00	←	←	7 - 77
C143 (Log.out 1 operand B)	Logic output operand B		✗	✓	00	←	←	
C144 (Log.out 1 operator)	Logic output operator	Select a logic operator to calculate [LOG] output state. 00…AND 01…OR 02…XOR	✗	✓	00	←	←	

"C" Function			Run Mode Edit		Defaults			
Func. Code (WOP)	Name	Description	A	B	Initial data standard 200/400	Initial data CHN 200/400	Initial data EU 200/400	Page
C151 (Button sens.)	Button sensitivity selection	Range: 0. to 250. (×2 ms) / no	✗	✓	10.	←	←	7 - 54
C152 (Scroll sens.)	Scroll sensitivity selection	Range: 1. to 20.	✗	✓	10.	←	←	
C155 (Ground fault set)	Ground fault detection	00…OFF 01…ON	✗	✓	01	←	←	7 - 82
C157 (Out phase-loss set)	Output phase loss detection	00…OFF 01…ON	✗	✓	00	←	←	7 - 82
C160 (Input [1] resp.time)	Intelligent input [1] response time	Set response time of each input terminal. Range: 0. to 200. (×2 ms)	✗	✓	1.	←	←	7 - 18
C161 (Input [2] resp.time)	Intelligent input [2] response time		✗	✓	1.	←	←	
C162 (Input [3] resp.time)	Intelligent input [3] response time		✗	✓	1.	←	←	
C163 (Input [4] resp.time)	Intelligent input [4] response time		✗	✓	1.	←	←	
C164 (Input [5] resp.time)	Intelligent input [5] response time		✗	✓	1.	←	←	
C169 (Multi-spd determ.time)	Multi-speed determination time	Range: 0. to 200. (×10 ms)	✗	✓	0.	←	←	7 - 33

"H" Function			Run Mode Edit		Defaults			
Func. Code (WOP)	Name	Description	A	B	Initial data standard 200/400	Initial data CHN 200/400	Initial data EU 200/400	Page
H001 *6) (Auto-tuning select)	Auto-tuning selection	00…OFF 01…ON 02…ON(Rotation)	✕	✕	00	←	←	7 - 88
H003 (Motor capacity)	Motor capacity	0.10 / 0.20 / 0.40 / 0.55 / 0.75 / 1.10 / 1.50 / 2.20 / 3.00 / 3.70 / 4.00 / 5.50 (kW)	✕	✕	*7)	←	←	7 - 49
H203 (Motor capacity-M2)	Motor capacity, 2nd motor		✕	✕		←	←	
H004 (Motor poles)	Motor poles setting	2 / 4 / 6 / 8 (poles)	✕	✕	4	←	←	
H204 (Motor poles-M2)	Motor poles setting, 2nd motor		✕	✕	4	←	←	
H006 (M.stabil.const)	Motor stabilization constant	Range: 0. to 255. (%)	✓	✓	100.	←	←	7 - 44
H206 (M.stabil. const-M2)	Motor stabilization constant, 2nd motor		✓	✓	100.	←	←	
H101 *6) (PM voltage)	PM motor rated voltage	Range: 100.0 to 240.0 (V) (200 V class inverter settings) 200.0 to 480.0 (V) (400 V class inverter settings)	✕	✕	200.0 / 400.0	←	←	7 - 87
H102 *6) (PM motor code select)	PM motor code setting	00…Normal 01…Auto-Tuning	✕	✕	00	←	←	
H103 *6) (PM motor capacity)	PM motor capacity	0.10 / 0.20 / 0.40 / 0.55 / 0.75 / 1.10 / 1.50 / 2.20 / 3.00 / 3.70 / 4.00 / 5.50 / 7.50 (kW)	✕	✕	*7)	←	←	
H104 *6) (PM motor poles)	PM motor pole setting	2 / 4 / 6 / 8 / 10 / 12 / 14 / 16 / 18 / 20 / 22 / 24 / 26 / 28 / 30 / 32 / 34 / 36 / 38 / 40 / 42 / 44 / 46 / 48 (poles)	✕	✕	01 (4P)	←	←	
H105 *6) (PM rated current)	PM rated current	Range: (0.20 to 1.00) × inverter rated current Amps.	✕	✕	*7)	←	←	
H106 *6) (PM const R)	PM const R (Resistance)	Range: 0.001 to 65.535 (Ω)	✕	✕	*7)	←	←	
H107 *6) (PM const Ld)	PM const Ld (d-axis inductance)	Range: 0.01 to 655.35 (mH)	✕	✕	*7)	←	←	
H108 *6) (PM const Lq)	PM const Lq (q-axis inductance)	Range: 0.01 to 655.35 (mH)	✕	✕	*7)	←	←	
H109 *6) (PM const Ke)	PM const Ke (Induction voltage constant)	Range: 0.1 to 6553.5 (mV/(rad/s))	✕	✕	*7)	←	←	
H110 *6) (PM const J)	PM const J (Moment of inertia)	Range: 0.001 to 9999.000 (kgm^2)	✕	✕	*7)	←	←	

*6) It is displayed in PM mode.
*7) Specified by the capacity of each inverter model

"H" Function			Run Mode Edit		Defaults			
Func. Code (WOP)	Name	Description	A	B	Initial data standard 200/400	Initial data CHN 200/400	Initial data EU 200/400	Page
H111 *6) (PM const R –Auto)	PM const R (Resistance, Auto)	Range: 0.001 to 65.535 (Ω)	✗	✗	*7)	←	←	7 - 87
H112 *6) (PM const Ld –Auto)	PM const Ld (d-axis inductance, Auto)	Range: 0.01 to 655.35 (mH)	✗	✗	*7)	←	←	
H113 *6) (PM const Lq –Auto)	PM const Lq (q-axis inductance, Auto)	Range: 0.01 to 655.35 (mH)	✗	✗	*7)	←	←	
H114 *6) (PM const Ke –Auto)	PM const Ke (Induction voltage constant, Auto)	Range: 0.1 to 6553.5 (mV/(rad/s))	✗	✗	*7)	←	←	
H116 *6) (PM speed response)	PM speed response	Range: 1. to 1000. (%)	✓	✓	100.	←	←	7 - 92
H117 *6) (PM starting current)	PM starting current	Range: 20. to 100. (%)	✗	✗	70.	←	←	
H118 *6) (PM starting time)	PM starting time	Range: 0.01 to 60.00 seconds	✗	✗	1.00	←	←	
H119 *6) (PM stabil.const)	PM stabilization constant	Range: 0. to 120. (%)	✓	✓	100.	←	←	
H121 *6) (PM min. freq. Ratio)	PM minimum frequency ratio	Range: 0. to 50. (%)	✓	✓	8.	←	←	
H122 *6) (PM No-Load current)	PM no-load current	Range: 0. to 100. (%)	✓	✓	10.	←	←	
H123 *6) (PM starting method)	PM starting method selection	00…Normal 01…Search	✗	✗	00	←	←	
H133 *6) (PM Pos. time)	PM initial magnet position estimation detect time	Range: 0.03 to 2.50 seconds	✗	✗	0.05	←	←	
H134 *6) (PM Pos. voltage gain)	PM initial magnet position estimation voltage gain	Range: 0 to 120 (%)	✗	✗	100	←	←	
H135 *6) (PM Step-out Set)	PM step-out protection selection	00…Off 01…TRIP 02…0Hz Start	✓	✓	00	←	←	
H136 *6) (PM Step-out Level)	PM step-out protection level	Range: 1 to 100 (%)	✓	✓	50	←	←	

*6) It is displayed in PM mode.
*7) Specified by the capacity of each inverter model

"H" Function			Run Mode Edit		Defaults			
Func. Code (WOP)	Name	Description	A	B	Initial data standard 200/400	Initial data CHN 200/400	Initial data EU 200/400	Page
H141 *6) (OC Level Set)	PM overcurrent detection level	Range: (1.00 to 2.50) × inverter rated current Amps.	✕	✓	2.35 × inverter rated current	←	←	7 - 92
H142 *6) (Start OC Level Set)	PM starting overcurrent detection level	Range: (1.00 to 2.50) × inverter rated current Amps.	✕	✓	1.80 × inverter rated current	←	←	

*6) It is displayed in PM mode.

13.1.6 Input/Output function summary table

Input Function Summary Table – This table shows all intelligent input functions at a glance. Detailed description of these functions, related parameters and settings are in “7.3.1 Intelligent input terminal setting”.

Input Function Summary Table				
Option Code	**Terminal Symbol**	**Function Name**	**Description**	
00	FW	Forward Run/Stop	ON	Inverter is in Run Mode, motor runs forward.
			OFF	Inverter is in Stop Mode, motor stops.
01	RV	Reverse Run/Stop	ON	Inverter is in Run Mode, motor runs reverse.
			OFF	Inverter is in Stop Mode, motor stops.
02	CF1	Multi-speed selection, Bit 1	ON	Binary encoded speed select, Bit 1, logical 1
			OFF	Binary encoded speed select, Bit 1, logical 0
03	CF2	Multi-speed selection, Bit 2	ON	Binary encoded speed select, Bit 2, logical 1
			OFF	Binary encoded speed select, Bit 2, logical 0
04	CF3	Multi-speed selection, Bit 3	ON	Binary encoded speed select, Bit 3, logical 1
			OFF	Binary encoded speed select, Bit 3, logical 0
06	JG	Jogging	ON	Inverter is in Run Mode, output to motor runs at jog frequency (A038).
			OFF	Inverter is in Stop Mode.
07	DB	External DC braking	ON	External DC braking will be applied.
			OFF	External DC braking will not be applied.
08	SET	Set (select) 2nd Motor Data	ON	The inverter uses 2nd motor parameters for generating frequency output to motor.
			OFF	The inverter uses 1st (main) motor parameters for generating frequency output to motor.
09	2CH	Two-stage Acceleration and Deceleration	ON	Frequency output uses two-stage acceleration and deceleration values.
			OFF	Frequency output uses standard acceleration and deceleration values.
11	FRS	Free-run Stop	ON	Causes output to turn OFF, allowing motor to free run to stop.
			OFF	Output operates normally, so controlled deceleration stop motor.
12	EXT	External Trip	ON	When assigned input transitions OFF to ON, inverter latches trip event and displays “E12”.
			OFF	No trip event for ON to OFF, any recorded trip events remain in history until reset.
13	USP	Unattended Start Protection	ON	On power up, the inverter will not resume a Run command (mostly used in the US).
			OFF	On power up, the inverter will resume a Run command that was active before power loss.
15	SFT	Software Lock	ON	The standard panel and remote operators are prevented from changing parameters.
			OFF	The parameters may be edited and stored.
18	RS	Reset Inverter	ON	The trip condition is reset, the inverter output is turned OFF, and power up reset is asserted.
			OFF	Normal power-ON operation.
20	STA	Start (3-wire interface)	ON	Starts the motor rotation.
			OFF	No change to present motor status.
21	STP	Stop (3-wire interface)	ON	Stops the motor rotation.
			OFF	No change to present motor status.
22	F/R	FW, RV (3-wire interface)	ON	Selects the direction of motor rotation: ON = Reverse. While the motor is rotating, a change of "F/R" will start a deceleration, followed by a change in direction.
			OFF	Selects the direction of motor rotation: OFF = Forward. While the motor is rotating, a change of "F/R" will start a deceleration, followed by a change in direction.

Input Function Summary Table				
Option Code	Terminal Symbol	Function Name	Description	
23	PID	PID Disable	ON	Temporarily disables PID loop control.
			OFF	Has no effect on PID loop operation.
24	PIDC	PID Reset	ON	Resets the PID loop controller. The main consequence is that the integrator sum is forced to zero.
			OFF	No effect on PID controller.
27	UP	Remote Control UP Function	ON	Accelerates (increases output frequency) motor from current frequency.
			OFF	Output to motor operates normally.
28	DWN	Remote Control Down Function	ON	Decelerates (decreases output frequency) motor from current frequency.
			OFF	Output to motor operates normally.
29	UDC	Remote Control Data Clearing	ON	Clears the UP/DWN frequency memory by forcing it to equal the frequency command parameter F001. Setting "C101" must be set “00” to enable this function to work.
			OFF	UP/DWN frequency memory is not changed.
31	OPE	Operator Control	ON	Forces to change the source of the frequency source (A001) and the run command source (A002) to operate both as "02" setting internally.
			OFF	The Frequency source set by "A001" and the run command source set by "A002" is used.
32	SF1	Multi-speed selection, Bit operation Bit 1	ON	Bit encoded speed select, Bit 1, logical 1
			OFF	Bit encoded speed select, Bit 1, logical 0
33	SF2	Multi-speed selection, Bit operation Bit 2	ON	Bit encoded speed select, Bit 2, logical 1
			OFF	Bit encoded speed select, Bit 2, logical 0
34	SF3	Multi-speed selection, Bit operation Bit 3	ON	Bit encoded speed select, Bit 3, logical 1
			OFF	Bit encoded speed select, Bit 3, logical 0
39	OLR	Overload Restriction Source Changeover	ON	Overload restriction function uses second settings (b024 to b026).
			OFF	Overload restriction function uses first settings (b021 to b023 / b221 to b223).
50	ADD	ADD frequency enable	ON	Adds the "A145" (add frequency) value to the output frequency.
			OFF	Does not add the "A145" value to the output frequency.
51	F-TM	Force Terminal Mode	ON	Forces to change the source of the frequency source (A001) and the run command source (A002) to operate both as "01" setting internally.
			OFF	Source of output frequency set by "A001" and source of Run command set by "A002" is used.
53	KHC	Clear watt-hour data	ON	Clear cumulative watt-hour data.
			OFF	No action.
65	AHD	Analog command hold	ON	Analog command is held.
			OFF	Analog command is not held.
83	HLD	Retain output frequency	ON	Retain the current output frequency.
			OFF	No retention.
84	ROK	Permission of Run command	ON	Run command permitted.
			OFF	Run command is not permitted.
86	DISP	Display limitation	ON	Only a parameter configured in "b038" is shown.
			OFF	All the monitors and parameters can be shown.
no	NO	No function	ON	(input ignored)
			OFF	(input ignored)

Output Function Summary Table – This table shows all intelligent output functions at a glance. Detailed descriptions of these functions, related parameters and settings are in “7.3.4 Intelligent output terminal setting”.

Output Function Summary Table				
Option Code	**Terminal Symbol**	**Function Name**	**Description**	
00	RUN	Run Signal	ON	When the inverter is in Run Mode.
			OFF	When the inverter is in Stop Mode.
01	FA1	Frequency Arrival Type 1–Constant Speed	ON	When output to motor is at the frequency command.
			OFF	When output to motor is OFF, or in any acceleration or deceleration ramp.
02	FA2	Frequency Arrival Type 2–Over frequency	ON	When output to motor is at or above the set frequency (C042 and C043), even if in acceleration or deceleration ramps.
			OFF	When output to motor is OFF, or at a level below the set frequency.
03	OL	Overload Advance Notice Signal	ON	When output current is more than the set threshold (C041) for the overload signal.
			OFF	When output current is equal to or less than the set threshold (C041) for the overload signal.
04	OD	Output Deviation for PID Control	ON	When PID deviation is equal to or more than the set threshold (C044) for the deviation signal.
			OFF	When PID deviation is less than the set threshold (C044) for the deviation signal.
05	AL	Alarm Signal	ON	When an alarm signal has occurred and has not been cleared.
			OFF	When no alarm has occurred since the last cleaning of alarm(s).
06	FA3	Frequency Arrival Type 3–Set frequency	ON	When output to motor is at the set frequency (C042 and C043), during acceleration and deceleration.
			OFF	When output to motor is OFF or is not at a level of the set frequency.
09	UV	Undervoltage	ON	Inverter is in undervoltage.
			OFF	Inverter is not in undervoltage.
11	RNT	Run Time Expired	ON	Total running time of the inverter exceeds the "b034" set value.
			OFF	Total running time of the inverter does not exceed the "b034" set value.
12	ONT	Power ON time Expired	ON	Total power ON time of the inverter exceeds the "b034" set value.
			OFF	Total power ON time of the inverter does not exceed the "b034" set value.
13	THM	Thermal Warning	ON	Accumulated thermal count exceeds the "C061" set value.
			OFF	Accumulated thermal count does not exceed the "C061" set value.
21	ZS	Zero Hz Speed Detection Signal	ON	Output frequency is equal to or falls below the threshold specified by "C063".
			OFF	Output frequency is higher than the threshold specified by "C063".
27	Dc	Analog Input Disconnect Detection	ON	When analog input signal loss is detected.
			OFF	When analog input signal loss is not detected.
31	FBV	PID Second Stage Output	ON	Transitions to ON when the inverter is in RUN Mode and the PID Process Variable (PV) is less than "C053".
			OFF	Transitions to OFF when the PID Process Variable (PV) exceeds "C052", and transitions to OFF when the inverter goes from Run Mode to Stop Mode.
32	NDc	Network Disconnect Detection	ON	When the communications watchdog timer (period specified by "C077") has time out.
			OFF	When the communications watchdog timer is satisfied by regular communications activity.
33	LOG	Logic Output Function	ON	When the Boolean operation specified by "C142" to "C144" has a logical “1” result.
			OFF	When the Boolean operation specified by "C142" to "C144" has a logical “0” result.
41	FR	Starting Contact Signal	ON	Either "FW" or "RV" command is given to the inverter.
			OFF	No "FW" or "RV" command is given to the inverter, or both are given to the inverter.

Output Function Summary Table				
Option Code	Terminal Symbol	Function Name	Description	
42	OHF	Heatsink Overheat Warning	ON	Temperature of the heatsink exceeds the "C064" set value.
			OFF	Temperature of the heatsink does not exceed the "C064" set value.
43	LOC	Low current detection	ON	Motor current is less than the specified by "C039".
			OFF	Motor current is not less than the specified by "C039".
50	IRDY	Inverter Ready Signal	ON	Inverter can receive a run command.
			OFF	Inverter cannot receive a run command.
51	FWR	Forward Rotation	ON	Inverter is driving the motor in forward direction.
			OFF	Inverter is not driving the motor in forward direction.
52	RVR	Reverse Rotation	ON	Inverter is driving the motor in reverse direction.
			OFF	Inverter is not driving the motor in reverse direction.
53	MJA	Major Failure Signal	ON	Inverter is tripping with major failure.
			OFF	Inverter is normal or is not tripping with major failure.
54	WC	Window Comparator for Analog Input	ON	Analog input value is inside of the window comparator.
			OFF	Analog input value is outside of the window comparator.
58	FREF	Frequency Command Source Signal	ON	Frequency command is given from the operator.
			OFF	Frequency command is not given from the operator.
59	REF	Run Command Source Signal	ON	Run command is given from the operator.
			OFF	Run command is not given from the operator.
60	SETM	2nd Motor Selection	ON	2nd motor is being selected.
			OFF	2nd motor is not being selected.
no	NO	No function	ON	-
			OFF	-

13.2 Top cover for exclusive use of NE-S1 series: NES1-FFM-M

・Prepared exclusive top cover NES1-FFM-M (Afterward FFM) to improve usability of the inverter.
The applicable models are as follows. There are respective effects.

1. Effect to improve the current derating properties
2. Effect to improve Capacitor life
3. Effect not to let dust invade the inverter from the upper part
4. Effect to reduce an installation area at the time of plural mount installation

Applicable model：NES1-015 to 022SB/LB, 007 to 040HB
Note) Please do not be attached to the inverter which is not an applicable model. There might be an injury, the fire. In addition, cause the inverter fault.

13.2.1 Mounting method

・Because of mounting method varies according to inverter, please be careful.
① NES1-015 to 022SB/LB,022HB,040HB
② NES1-015HB
③ NES1-007HB
・The inverter included in ①, fit FFM in the cover upper surface of the main body of inverter.
・The inverter included in ②, after having removed the back side rib of FFM in figure 2 (shaded area) surgically by nippers, fit FFM in the cover upper surface of the main body of inverter.
・The inverter included in ③, after having removed the back side rib of FFM in figure 2 and 3 (shaded area) surgically by nippers, fit FFM in the cover upper surface of the main body of inverter.

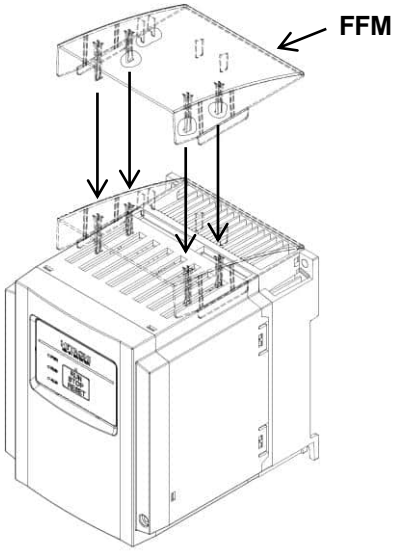

Figure 1. Mounting method of FFM

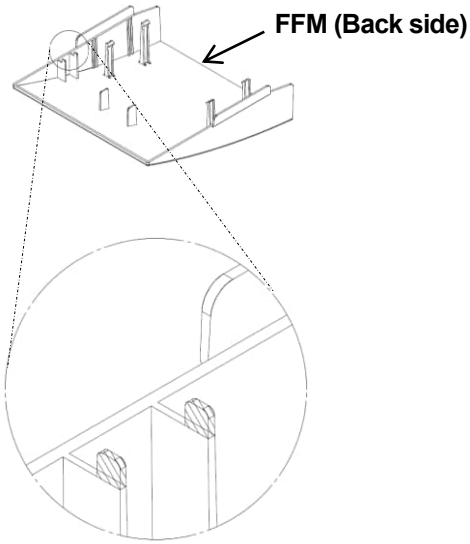

Figure 2. Part (shaded area) to remove surgically

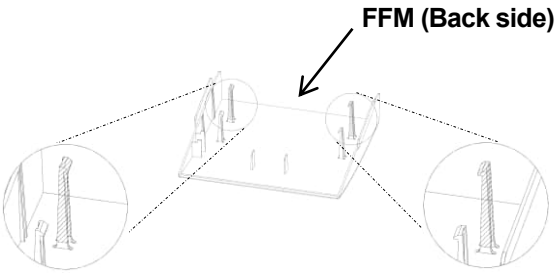

Figure 3. Part (shaded area) to remove surgically

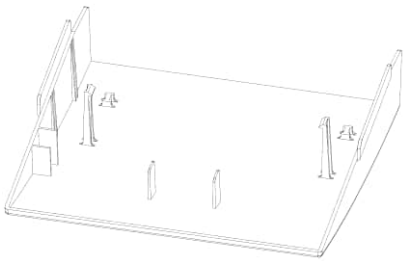

Figure 4. After removing parts in Figure 2 and 3

13.2.2 Improvement of the derating

・Derating properties are improved by attaching optional FFM to an applicable model. All models with attaching FFM (except NES1-040HB) will be no longer required for carrier derating and current derating at ambient temperature of 50 ℃.
The detail refers to figure 5, 6 and figure 7.

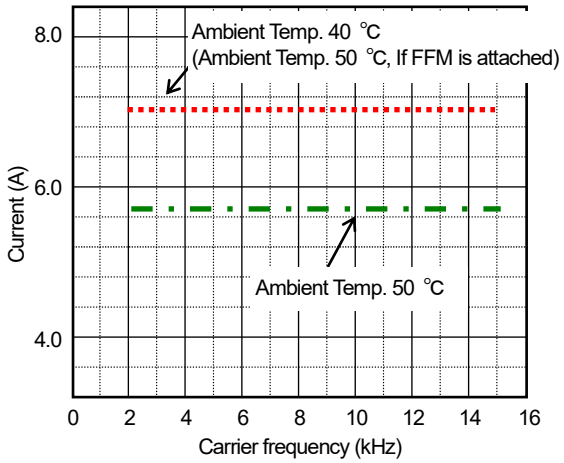

Figure 5. Derating of NES1-015SB

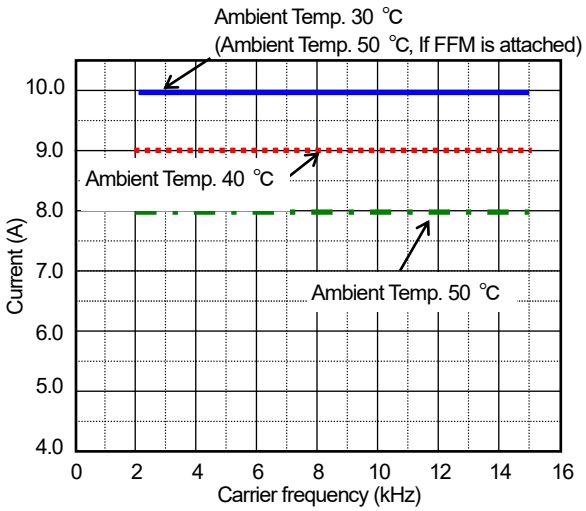

Figure 6. Derating of NES1-022SB

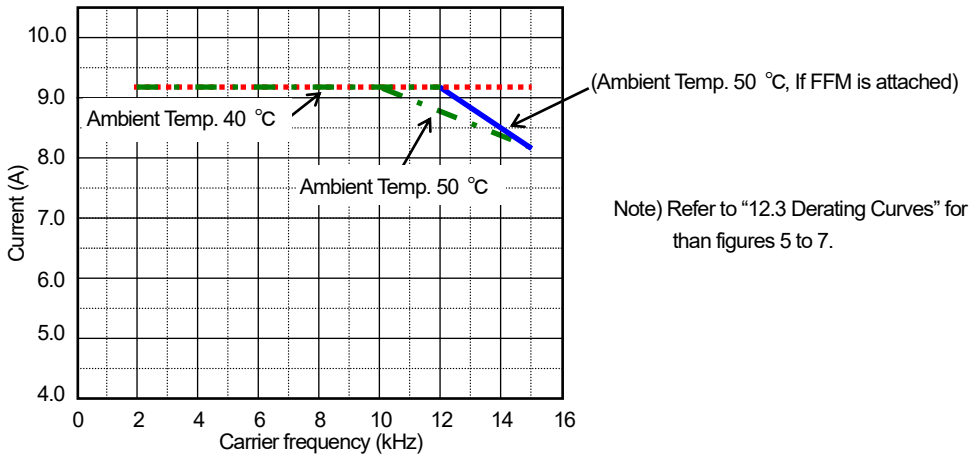

Note) Refer to "12.3 Derating Curves" for models other than figures 5 to 7.

Figure 7. Derating of NES1-040HB

13.2.3 Capacitor life improvement

・If FFM is attached to an applicable model, the capacitor (on the control board) life doubles approximately.
The detail refers to figure 8.

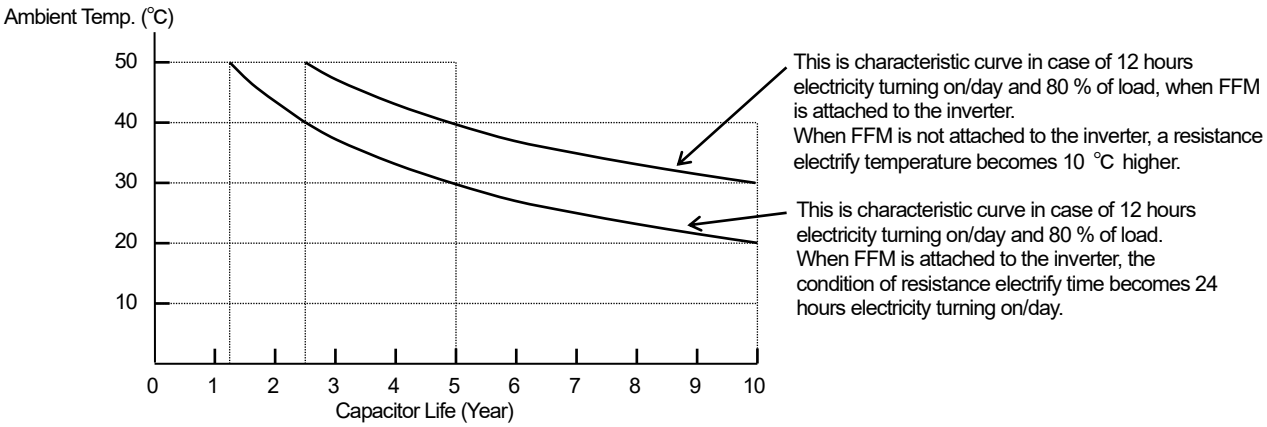

Figure 8. The Characteristic Curve of Capacitor Life

13.2.4 Reduction of the dust invades

・Because the NE-S1 series inverter has a top opening that becomes the window shade construction, it is in the structure that the dust from the top is hard to invade the products inside directly. The dust from the top becomes harder to invade the inverter inside by attaching optional FFM to an applicable model.
The detail refers to figure 9.

Figure 9. FFM installation state

13.2.5 Reduction of the inverter installation area

・The inverter needs to install with the space for ventilation more than 10 cm from the inverter upper and lower surface. If the optional FFM to an applicable model is attached, the air will be exhausted to the front. Therefore, upper space can be only 2 cm that is height of FFM (Refer to Figure 10).
In this case, please keep the clearance from the front cover to such as cabinet door (Refer to Figure 11).
In addition, as well as a case to set up inverters lengthwise, the space more than 10 cm becomes needless even if a wiring duct is installed above the inverter.
Therefore, you can reduce requisite space at the installation (Refer to Figure 12).

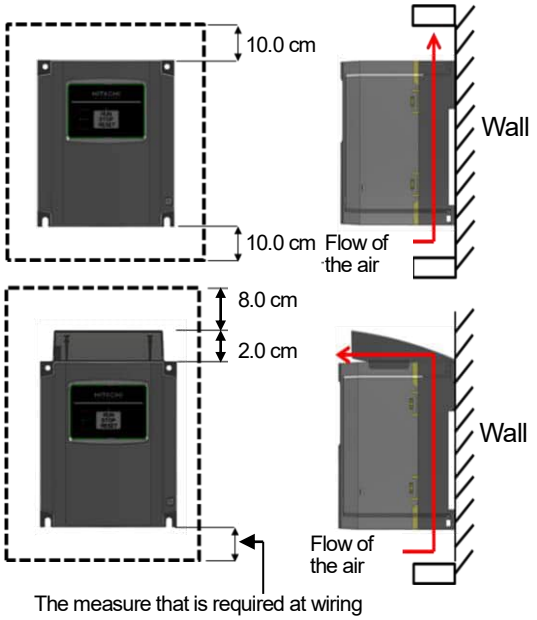

Figure 10. Reduction of the inverter upper part space

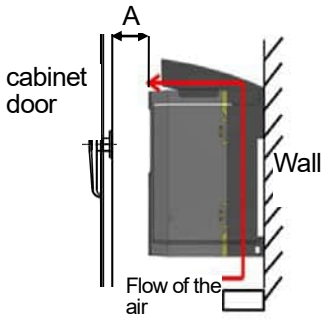

Minimum clearance to be kept as indicated "A" as follows.
NES1-007H : 2.0 cm
NES1-015S/L/H : 0.8 cm
NES1-022S/L/H : 0.0 cm
NES1-040H : 0.0 cm

(Note)
When connecting the NES1-OP, the height of the volume for frequency setting is required.

Figure 11. Minimum requisite clearance from front cover of the inverter

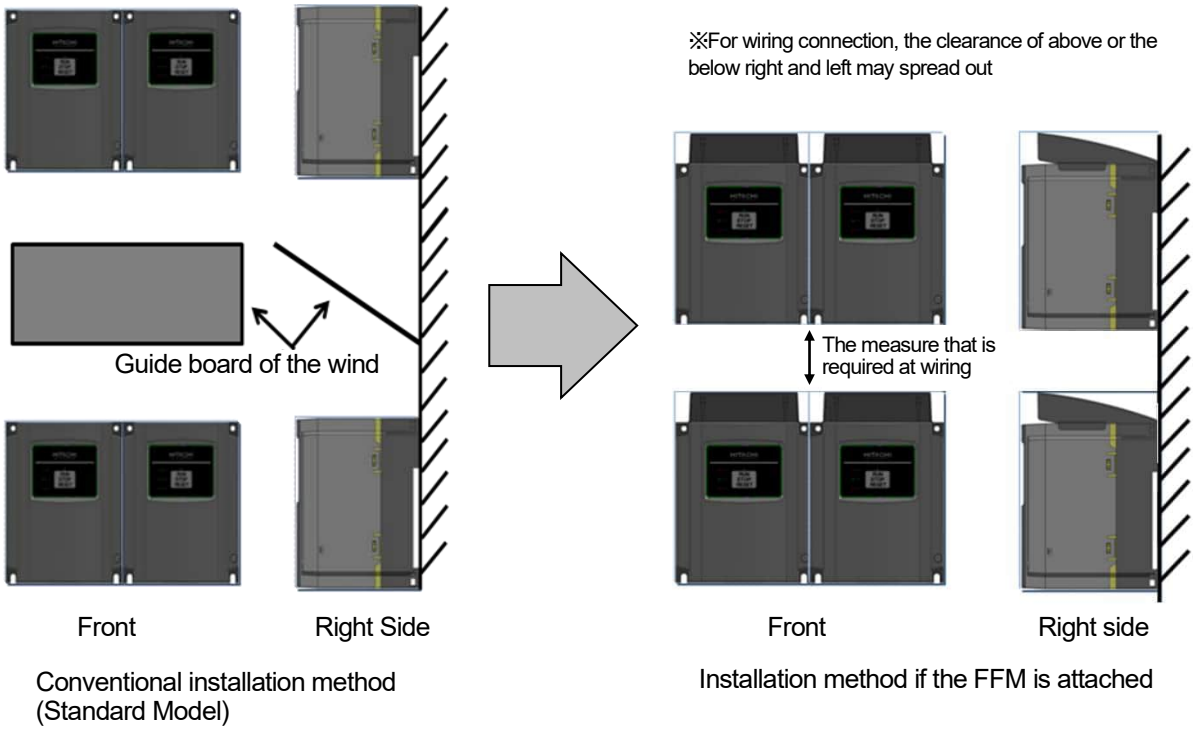

Figure 12. Reduction of the several inverters installation area

Appendix

Appendix A ·····Appendix - 3

(Memo)

Appendix-A　Disassembly method of NES1-OP

(1) After having removed the front cover, remove two places of screws.

Remove two places of screws.

(2) Pick up the side of the operator cover, and remove a NES1-OP.

*Take it off the inverter right side by all means if you exclude a NES1-OP.

Pick up the point that I ordered in a figure A below, and flatter PCB, and take off two places of claws of the operator to open it outside of inverter (cf. figure A,B). If the claw of the right-side surface comes off, remove the left side surface equally next (cf. figure C,D).

Pick up two places

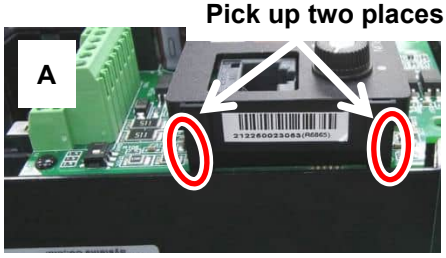

Take off two places of claws of NES1-OPE to open it outside of inverter

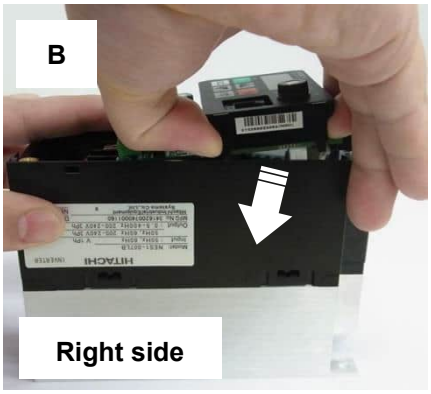

The condition that two places of claws of NES1-OPE were off.

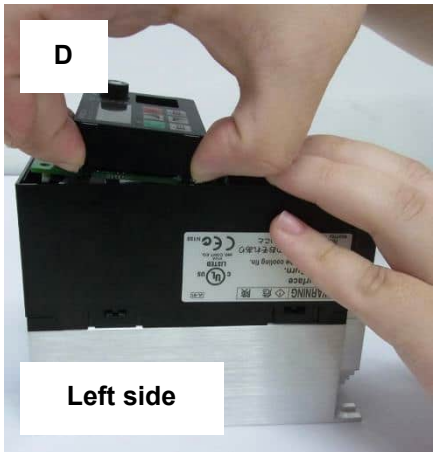

A

a-contact ..... 7 - 17, 7 - 19
acceleration curve constant ..... 7 - 36
acceleration hold frequency ..... 7 - 32
acceleration hold time ..... 7 - 32
acceleration pattern ..... 7 - 36
acceleration time ..... 7 - 13
acceleration time (2) ..... 7 - 35
active frequency matching ..... 7 - 59
ADD ..... 7 - 38
ADD direction select ..... 7 - 38
ADD frequency ..... 7 - 38
AHD ..... 7 - 22
AL ..... 7 - 66
AL0, AL1, AL2 (terminal) ..... 5 - 8
ALARM LED ..... 6 - 6, 6 - 7
allowable undervoltage time ..... 7 - 55
analog command holding ..... 7 - 22
analog input ..... 7 - 21
analog input filter ..... 7 - 21
automatic carrier frequency reduction ..... 7 - 73
automatic return to the initial display ..... 7 - 52
automatic torque boost ..... 7 - 28
AVR ..... 7 - 14
AVR deceleration gain ..... 7 - 14
AVR filter time constant ..... 7 - 14
AVR voltage selection ..... 7 - 14

B

b-contact ..... 7 - 17, 7 - 19
base frequency ..... 7 - 14
basic display mode ..... 7 - 54
binary operation ..... 7 - 33
bit operation ..... 7 - 34

C

capacitor life curve ..... 11 - 7
carrier frequency ..... 7 - 16
caution for driving PM motor ..... 7 - 84
CF1, CF2, CF3 ..... 7 - 33
change to PM motor control mode ..... 7 - 86
charge lamp ..... 3 - 4, 5 - 11
CM2 (terminal) ..... 5 - 8
communication error selection ..... 8 - 6
constant torque characteristic (electronic thermal) ..... 7 - 68
constant torque characteristic (VC) ..... 7 - 25
control terminal ..... 5 - 7, 5 - 14
control terminal A,B ..... 3 - 4, 5 - 14
cumulative operation RUN time monitoring ..... 7 - 6
cumulative power monitoring ..... 7 - 6
cumulative power-on time monitoring ..... 7 - 6
current time monitoring ..... 7 - 6

D

data comparison display mode ..... 7 - 53
DB ..... 7 - 46
Dc ..... 7 - 81
DC braking ..... 7 - 46
DC bus voltage monitoring ..... 7 - 8
deceleration and stopping at power failure ..... 7 - 64
deceleration curve constant ..... 7 - 36
deceleration hold frequency ..... 7 - 32
deceleration hold time ..... 7 - 32
deceleration overvoltage suppression ..... 7 - 71
deceleration pattern ..... 7 - 36
deceleration time ..... 7 - 13
deceleration time (2) ..... 7 - 35
derating (curve) ..... 12 - 7
detection of terminal disconnection ..... 7 - 81
digital current monitor reference value ..... 7 - 24
digital current monitoring ..... 7 - 24
digital output frequency ..... 7 - 24
dimensions ..... 12 - 5
DISP ..... 7 - 52
display limitation function ..... 7 - 52
down key ..... 6 - 7
dual monitoring ..... 7 - 7
DWN ..... 7 - 38

E

electronic thermal ..... 7 - 67
electronic thermal overload monitoring ..... 7 - 8
electronic thermal warning level ..... 7 - 68
EMC ..... 1 - 7
energy-saving mode tuning ..... 7 - 44
energy-saving operation ..... 7 - 44
error code ..... 9 - 5
Escape key ..... 6 - 7
EXT ..... 7 - 72
external DC braking ..... 7 - 47
external trip ..... 7 - 72

F

F/R ..... 7 - 28
F-TM ..... 7 - 51
FA1, FA2, FA3 ..... 7 - 74
factory (default) setting ..... 7 - 83
FBV ..... 7 - 40, 7 - 43
FM (terminal) ..... 5 - 8
forcible-operation (operator) ..... 7 - 51
forcible-operation (terminal) ..... 7 - 51
forward rotation signal ..... 7 - 79
FR ..... 7 - 78
free setting characteristic (electronic thermal) ..... 7 - 68
free V/f characteristic ..... 7 - 26
free-run stop ..... 7 - 62
FREF ..... 7 - 82
frequency addition ..... 7 - 38
frequency arrival setting for acceleration ..... 7 - 74
frequency arrival setting for deceleration ..... 7 - 74
frequency arrival signals. ..... 7 - 74
frequency limit ..... 7 - 31
frequency lower limit ..... 7 - 31
frequency matching ..... 7 - 85
frequency source ..... 7 - 9
frequency upper limit ..... 7 - 31
FRS ..... 7 - 62
function code display restriction ..... 7 - 53
function-specific display mode ..... 7 - 53

fuse size ..... 1 - 11, 5 - 13
FW ..... 7 - 12
FWR ..... 7 - 79

G

ground terminal ..... 5 - 7, 5 - 10

H

H (terminal) ..... 5 - 7
heatsink overheat warning ..... 7 - 78
heatsink temperature monitoring ..... 7 - 6
HLD ..... 7 - 32

I

Initial display selection ..... 7 - 52
initialization ..... 7 - 83
input power monitoring ..... 7 - 5
inspection ..... 2 - 3, 11 - 3
instantaneous undervoltage trip alarm enable ..... 7 - 55, 7 - 57
intelligent input terminal ..... 5 - 8, 7 - 17
intelligent input terminal a/b selection ..... 7 - 17
intelligent input terminal response time ..... 7 - 18
intelligent input terminal status ..... 7 - 4
intelligent output terminal ..... 5 - 8, 7 - 18
intelligent output terminal status ..... 7 - 4
intelligent relay outputs ..... 5 - 8
intelligent relay terminal ..... 7 - 18
internal DC braking ..... 7 - 49
inverse U-curve acceleration / deceleration . 7 - 36
inverter mode monitoring ..... 7 - 7
IRDY ..... 7 - 79

J

JG ..... 7 - 30
jog frequency ..... 7 - 30
jogging command setting ..... 7 - 30
jump frequency ..... 7 - 31

K

KHC ..... 7 - 6

L

L (terminal) ..... 5 - 7
LAD ..... 7 - 24
linear acceleration / deceleration ..... 7 - 36
LOC ..... 7 - 79
LOG ..... 7 - 77
logic output signal operation ..... 7 - 77
low-current indication signal ..... 7 - 79

M

main terminal ..... 3 - 4, 5 - 7
maintenance and inspection ..... 11 - 3
major failure signal ..... 7 - 74
manual torque boost ..... 7 - 22
maximum frequency ..... 7 - 11
megger testing ..... 11 - 5
MJA ..... 7 - 80
Modbus-RTU ..... 8 - 3
monitor display only mode ..... 7 - 53
multi-speed determination time ..... 7 - 33
multi-speed select setting ..... 7 - 33

N

NDc ..... 7 - 78
network disconnect detection signal ..... 7 - 78
NO/NC ..... 7 - 17, 7 - 19
number of retry on overvoltage / overcurrent trip ..... 7 - 57

O

O/OI (terminal) ..... 5 - 7, 7 - 21
OD ..... 7 - 40, 7 - 43
OHF ..... 7 - 78
OL ..... 7 - 70
OLR ..... 7 - 69
ONT ..... 7 - 76
OPE ..... 7 - 51
operation at external operator connection loss ..... 7 - 51
output active state ..... 7 - 19
output current monitoring ..... 7 - 3
output frequency monitoring ..... 7 - 3
output frequency setting ..... 7 - 9
output on / off delay ..... 7 - 20
output voltage monitoring ..... 7 - 5
overcurrent restraint ..... 7 - 70
overload advance notice signal ..... 7 - 70
overload restriction ..... 7 - 69

P

P24 (terminal) ..... 5 - 7, 5 - 15, 5 - 17
PID function ..... 7 - 40
PID scale ..... 7 - 4, 7 - 41
PID sleep function ..... 7 - 40, 7 - 43
PID variation range ..... 7 - 40, 7 - 42
PIDC ..... 7 - 40, 7 - 43
PLC (terminal) ..... 5 - 7, 5 - 15, 5 - 17
PM auto-tuning ..... 7 - 88
PM motor constants ..... 7 - 87
PM motor drive ..... 7 - 84, 7 - 92
POWER LED ..... 6 - 6
power-on time over ..... 7 - 76
program LED ..... 6 - 7
programmable controller ..... 5 - 16
PV (process variable) monitoring ..... 7 - 4
PV comparison signal ..... 7 - 40, 7 - 43

R

reduced torque characteristic (1.7^{th} power of VP) ..... 7 - 25
reduced torque characteristic (electronic thermal) ..... 7 - 67
reduced voltage start ..... 7 - 29
REF ..... 7 - 82

reset ..... 6 - 19, 7 - 60
restart frequency threshold ..... 7 - 57
restart mode on undervoltage trip ..... 7 - 55
restart with an active matching frequency .... 7 - 59
restricted distribution ..... 2 - 3, 7 - 83
retry after overcurrent, overvoltage ..... 7 - 57
retry wait time before motor restart ..... 7 - 55
retry wait time on overvoltage / overcurrent trip ..... 7 - 55
reverse PID action ..... 7 - 40, 7 - 42
reverse rotation signal ..... 7 - 80
RNT ..... 7 - 76
ROK ..... 7 - 32
rotation direction monitoring ..... 7 - 3
rotational direction restriction ..... 7 - 12
RS ..... 6 - 19, 7 - 60
RUN ..... 7 - 74
run command source ..... 7 - 12
run command LED ..... 6 - 7
RUN key ..... 6 - 7
RUN LED ..... 6 - 6, 6 - 7
Run Mode Edit ..... 7 - 50, 13 - 3
RUN/STOP/RESET key ..... 6 - 6
running time over signal ..... 7 - 76
RV ..... 7 - 12
RVR ..... 7 - 80

S

S-curve acceleration / deceleration ..... 7 - 36
scaled output frequency monitoring ..... 7 - 5
2nd motor control ..... 7 - 45
SET ..... 7 - 45
SET key ..... 6 - 7
SETM ..... 7 - 82
SF1, SF2, SF3 ..... 7 - 34
SFT ..... 7 - 50
side-by-side ..... 4 - 4
sink logic ..... 5 - 15, 5 - 16, 5 - 17
software lock ..... 7 - 50
source logic ..... 5 - 15, 5 - 16, 5 - 18
specifications ..... 12 - 3
STA ..... 7 - 28
stabilization constant ..... 7 - 44
start frequency ..... 7 - 29
start/end frequency setting for external analog input ..... 7 - 23
starting contact signal ..... 7 - 78
stop mode selection ..... 7 - 13
STP ..... 7 - 28
switch for O/OI (analog input) changeover (SW6) ..... 3 - 4, 5 - 8
switch for RS485/OPE (SW5) ..... 3 - 4, 5 - 8
switch for termination resistor (SW4) .... 3 - 4, 5 - 8

T

termination resistors ..... 8 - 4
thermal warning ..... 7 - 68
THM ..... 7 - 68
3-wire input function ..... 7 - 28
tightening torque ..... 1 - 11, 5 - 13, 5 - 14
torque boost ..... 7 - 27
trip ..... 6 - 19, 7 - 66
trip counter ..... 7 - 7
trip monitoring ..... 7 - 8
troubleshooting ..... 10 - 3
two-stage acceleration/deceleration ..... 7 - 35
2CH ..... 7 - 35

U

U-curve acceleration / deceleration ..... 7 - 36
UDC ..... 7 - 38
UL ..... 1 - 11
unattended start protection ..... 7 - 63
UP ..... 7 - 38
UP key ..... 6 - 7
USP ..... 7 - 63
UV ..... 7 - 55

V

V/f characteristic curve ..... 7 - 25
V/f gain setting ..... 7 - 39
VC ..... 7 - 25
VP ($f^{1.7}$) ..... 7 - 25

W

warning code ..... 9 - 7
warning monitoring ..... 7 - 8
WC ..... 7 - 81
window comparator ..... 7 - 81
wiring of the control circuit ..... 5 - 14
wiring of the main circuit ..... 5 - 9
withstand voltage test ..... 11 - 5

Z

0 Hz speed detection signal ..... 7 - 76
ZS ..... 7 - 76