HITACHI
Inspire the Next

Read this "Basic Guide" and keep it handy for future reference.

Basic Guide
HITACHI S1 IP55 Series Inverter
S1

Preface
Contents
Chapter 1: Safety precautions
Chapter 2: Quick startup
Chapter 3: Product overview
Chapter 4: Installation guide
Chapter 5: Basic operation instructions
Chapter 6: Function parameter list
Chapter 7: Troubleshooting
Chapter 8: Maintenance and hardware fault diagnosis
Chapter 9: Communication protocol
Appendix A: Expansion cards
Appendix B: Technical data
Appendix C: Dimension drawings
Appendix D: Wiring guide
Appendix E: STO Function description
Appendix F: Acronyms and abbreviations
Appendix G: Energy efficiency data
Appendix H: Further information

If you have any inquiry or problem,
Refer to Chapter 7 Troubleshooting
or
Contact to the Technical Inquiry Service for Inverter.

When contacting us, please mention the below reference number.

BG-S1-IP55-03/21EN

Preface

Thank you for choosing S1 IP55 high-ingress protection series Inverter.

The S1 IP55 high-ingress protection series Inverter is a high-performance and multipurpose Inverter aiming to integrate the driving of synchronous motors and asynchronous motors, and torque control, speed control with position control. It is armed with advanced vector control technology and the latest digital processor dedicated for motor control, thus enhancing product reliability and adaptability to the environment. The S1 IP55 high-ingress protection series Inverter adopts customized and industrialized design to realize excellent control performance through optimized functions and flexible applications.

To meet the basic needs of customers, Inverters of power range from 4 to 110 kW are developed for S1 IP55 high-ingress protection series Inverters. To meet diversified customer demands, the S1 IP55 high-ingress protection series Inverter provides abundant expansion cards including programmable expansion card, PG card, communication card and I/O expansion card to achieve various functions as needed.

The programmable expansion card adopts mainstream development environment for customers to carry out secondary development easily, fulfilling varied customized needs and reducing customer cost.

PG card supports a variety of encoders like incremental encoders and resolver-type encoders, in addition, it also supports pulse reference and frequency-division output. PG card adopts digital filter technology to improve EMC performance and to realize stable transmission of the encoder signal over a long distance. It is equipped with encoder offline detection function to contain the impact of system faults.

The S1 IP55 high-ingress protection series Inverter supports multiple kinds of popular communication modes to realize complicated system solutions. It can be connected to the internet with optional wireless communication card, by which users can monitor the Inverter state anywhere any time via mobile APP.

The S1 IP55 high-ingress protection series Inverter uses high power density design. Some power ranges carry built-in DC reactor and brake unit to save installation space. Through overall EMC design, it can satisfy the low noise and low electromagnetic interference requirements to cope with challenging grid, temperature, humidity and dust conditions, thus greatly improving product reliability.

This operation manual presents installation wiring, parameter setup, fault diagnosis and trouble shooting, and precautions related to daily maintenance. Read through this manual carefully before installation to ensure that the S1 IP55 high-ingress protection series Inverter is installed and operated in a proper manner to give full play to its excellent performance and powerful functions.

If the end user is a military unit or the product is used for weapon manufacturing, please comply with relevant export control regulations, and complete necessary formalities.

Our company reserves the right to update the information of our products.

Contents

Preface i
Contents ii
1 Safety Precautions 1
1.1 What this chapter contains 1
1.2 Safety definition 1
1.3 Warning symbols 1
1.4 Safety guidelines 2
1.4.1 Delivery and installation 2
1.4.2 Commissioning and running 3
1.4.3 Maintenance and component replacement 3
1.4.4 Scrap treatment 4
2 Quick Startup 5
2.1 What this chapter contains 5
2.2 Unpack inspection 5
2.3 Application confirmation 5
2.4 Environment confirmation 5
2.5 Installation confirmation 6
2.6 Basic commissioning 6
2.7 Safety standard related data 7
3 Product Overview 8
3.1 What this chapter contains 8
3.2 Basic principle 8
3.3 Product specification 8
3.4 Product nameplate 10
3.5 Product model 11
3.6 Rated values 11
3.7 Structure diagram 12
4 Installation guide 13
4.1 What this chapter contains 13
4.2 Mechanical installation 13
4.2.1 Installation environment 13
4.2.2 Installation direction 14
4.2.3 Installation mode 15
4.2.4 Single-unit installation 15
4.2.5 Multiple-unit installation 16
4.2.6 Vertical installation 17
4.2.7 Tilted installation 18
4.3 Standard wiring of main circuit 19
4.3.1 Wiring diagram of main circuit 19

4.3.2 Main circuit terminal diagram 19
4.3.3 Wiring process of the main circuit terminals 21
4.4 Standard wiring of control circuit 22
4.4.1 Wiring diagram of basic control circuit 22
4.4.2 Input/output signal connection diagram 24
4.5 Wiring protection 25
4.5.1 Protect the Inverter and input power cable in short-circuit 25
4.5.2 Protect the motor and motor cable in short circuit 25
4.5.3 Protect motor and prevent thermal overload 26
4.5.4 Bypass connection 26
5 Basic Operation Instructions 27
5.1 What this chapter contains 27
5.2 Keypad introduction 27
5.3 Keypad display 30
5.3.1 Stop parameter display state 30
5.3.2 Displaying running-state parameters 31
5.3.3 Displaying fault information 32
5.4 Operating the Inverter through the keypad 32
5.4.1 Enter/exit menu 32
5.4.2 Editing a parameter list 36
5.4.3 Adding parameters to the parameter list displayed in stopped/running state 37
5.4.4 Adding parameters to the user defined parameter list 38
5.4.5 Editing user defined parameters 39
5.4.6 Editing parameters in parameter groups 40
5.4.7 Monitoring states 40
5.4.8 Autotuning motor parameters 41
5.4.9 Backing up parameters 41
5.4.10 System settings 42
5.4.11 Power-on setup wizard 42
5.5 Basic operation instruction 43
5.5.1 What this section contains 43
5.5.2 Common commissioning procedures 44
5.5.3 Vector control 47
5.5.4 V/F control mode 51
5.5.5 Torque control 59
5.5.6 Motor parameter 63
5.5.7 Start/stop control 67
5.5.8 Frequency setup 73
5.5.9 Analog input 76
5.5.10 Analog output 79
5.5.11 Digital input 83

5.5.12 Digital output 91
5.5.13 Simple PLC 96
5.5.14 Multi-step speed running 97
5.5.15 PID control 99
5.5.16 Run at wobbling frequency 104
5.5.17 Local encoder input 106
5.5.18 Commissioning procedures for closed-loop control, position control and spindle positioning 106
5.5.19 Fault handling 112
5.5.20 Tension control solutions 116
6 Function parameter list 121
6.1 What this chapter contains 121
6.2 Function parameter list 121
P00 group—Basic functions 122
P01 group—Start/stop control 125
P02 group—Parameters of motor 1 131
P03 group—Vector control of motor 1 135
P04 group—V/F control 141
P05 group—Input terminals 148
P06 group—Output terminals 156
P07 group—HMI 161
P08 group—Enhanced functions 166
P09 group—PID control 174
P10 group—Simple PLC and multi-step speed control 178
P11 group—Protection parameters 181
P12 group—Parameters of motor 2 189
P13 group—Control parameters of synchronous motor 192
P14 group—Serial communication function 193
P15 group—Functions of communication expansion card 1 197
P16 group—Functions of communication expansion card 2 200
P17 group—State-check functions 205
P18 group—Closed-loop control state check 209
P19 group—Expansion card state check 212
P20 group—Encoder of motor 1 214
P21 group—Position control 218
P22 group—Spindle positioning 223
P23 group—Vector control of motor 2 226
P24 group—Encoder of motor 2 227
P25 group—Extension I/O card input functions 231
P26 group—Output functions of I/O expansion card 234
P27 group—Programmable expansion card functions 236

P28 group—Master/slave control functions 239
P90 group—Tension control in speed mode 242
P91 group—Tension control in torque mode 245
P92 group—Tension optimization 248
P93 group—Tension control status viewing 250
7 Troubleshooting 252
7.1 What this chapter contains 252
7.2 Indications of alarms and faults 252
7.3 Fault reset 252
7.4 Fault history 252
7.5 Inverter faults and solutions 252
7.5.1 Details of faults and solutions 252
7.5.2 Other state 260
7.6 Analysis on common faults 261
7.6.1 Motor fails to work 261
7.6.2 Motor vibrates 262
7.6.3 Overvoltage 263
7.6.4 Undervoltage 263
7.6.5 Unusual heating of motor 264
7.6.6 Inverter overheating 265
7.6.7 Motor stalls during ACC 266
7.6.8 Overcurrent 267
7.7 Countermeasures on common interference 267
7.7.1 Interference on meter switches and sensors 267
7.7.2 Interference on communication 268
7.7.3 Failure to stop and indicator shimmering due to motor cable coupling 269
7.7.4 Leakage current and interference on RCD 270
7.7.5 Live device chassis 271
8 Maintenance and hardware fault diagnosis 272
8.1 What this chapter contains 272
8.2 Periodical inspection 272
8.3 Cooling fan 274
8.4 Capacitor 275
8.4.1 Capacitor reforming 275
8.4.2 Electrolytic capacitor replacement 276
8.5 Power cable 276
9 Communication protocol 277
9.1 What this chapter contains 277
9.2 Modbus protocol introduction 277
9.3 Application of Modbus 277
9.3.1 RS485 277

9.3.2 RTU mode 280
9.4 RTU command code and communication data 283
9.4.1 Command code: 03H, reading N words 283
9.4.2 Command code: 06H, writing a word 284
9.4.3 Command code: 08H, diagnosis 285
9.4.4 Command code: 10H, continuous writing 286
9.4.5 Data address definition 286
9.4.6 Fieldbus scale 290
9.4.7 Error message response 291
9.4.8 Read/Write operation example 292
9.5 Common communication faults 297
Appendix A Expansion cards 298
A.1 Model definition 298
A.2 Dimensions and installation 307
A.3 Wiring 309
A.4 I/O expansion card 310
A.4.1 I/O expansion card 1 (EC-IO501-00) 310
A.4.2 I/O expansion card 2 (EC-IO502-00) 311
A.5 Programmable expansion card (EC-PC502-00) function description 313
A.6 Communication card function description 316
A.6.1 Bluetooth communication card (EC-TX501) and WIFI communication card (EC-TX502) 316
A.6.2 PROFIBUS-DP communication card (EC-TX503) 317
A.6.3 Ethernet communication card (EC-TX504) 319
A.6.4 CAN multi-protocol communication card (EC-TX505C) 319
A.6.5 PROFINET communication card (EC-TX509C) 321
A.6.6 Ethernet/IP communication card (EC-TX510) and Modbus TCP communication card (EC-TX515) 323
A.7 PG expansion card function description 325
A.7.1 Sin/Cos PG card (EC-PG502) 325
A.7.2 UVW incremental PG card (EC-PG503-05) 327
A.7.3 Resolver PG card (EC-PG504-00) 329
A.7.4 Multi-function incremental PG card (EC-PG505-12) 331
A.7.5 24V incremental PG card (EC-PG505-24B) 334
A.7.6 Simplified incremental PG card (EC-PG507-12) 337
A.7.7 24V simplified incremental PG card (EC-PG507-24) 338
A.8 IoT cards 342
A.8.1 GPRS card (EC-IC501-2) 342
A.8.2 4G card (EC-IC502-2-CN, EC-IC502-2-EU, EC-IC502-2-LA) 343
Appendix B Technical data 344
B.1 What this chapter contains 344

B.2 Derated application 344
B.2.1 Capacity 344
B.2.2 Derating 344
B.3 Grid specifications 345
B.4 Motor connection data 345
B.4.1 EMC compatibility and motor cable length 345
B.5 Application standards 346
B.5.1 CE marking 346
B.5.2 EMC compliance declaration 346
B.6 EMC regulations 346
B.6.1 Inverter category C2 347
B.6.2 Inverter category C3 347
Appendix C Dimension drawings 348
C.1 What this chapter contains 348
C.2 Inverter structure 348
C.3 Dimensions of Inverters 349
C.3.1 Wall-mounting dimensions 349
C.3.2 Flange mounting dimensions 351
Appendix D Wiring guide 353
D.1 Cables 353
D.1.1 Power cables 353
D.1.2 Control cables 354
D.1.3 Cable arrangement 357
D.1.4 Insulation inspection 357
D.2 Breaker and electromagnetic contactor 357
Appendix E STO function description 359
E.1 STO function logic table 359
E.2 STO channel delay description 359
E.3 STO function installation checklist 360
Appendix F Acronyms and abbreviations 361
Appendix G Energy efficiency data 362
Appendix H Further information 363
H.1 Product and service queries 363
H.2 Feedback on HITACHI Inverter manuals 363
H.3 Documents on the Internet 363

1 Safety Precautions

1.1 What this chapter contains

Read this manual carefully and follow all safety precautions before moving, installing, operating and servicing the Inverter. If these safety precautions are ignored, physical injury or death may occur, or damage may occur to the equipment.

If any physical injury or death or damage to the equipment occur due to neglect of the safety precautions in the manual, our company will not be responsible for any damages and we are not legally bound in any manner.

1.2 Safety definition

Danger: Serious physical injury or even death may occur if related requirements are not followed

Warning: Physical injury or damage to the equipment may occur if related requirements are not followed

Note: Procedures taken to ensure proper operation.

Qualified electricians: People working on the device should take part in professional electrical and safety training, receive the certification and be familiar with all steps and requirements of installing, commissioning, operating and maintaining the device to prevent any emergencies.

1.3 Warning symbols

Warnings caution you about conditions which can result in serious injury or death and/or damage to the equipment, and advice on how to avoid the danger. Following warning symbols are used in this manual.

Symbols	Name	Instruction	Abbreviation
Danger	Danger	Serious physical injury or even death may occur if related requirements are not followed	
Warning	Warning	Physical injury or damage to the equipment may occur if related requirements are not followed	
Forbid	Electrostatic discharge	Damage to the PCBA board may occur if related requirements are not followed	
Hot	Hot sides	The base of the Inverter may become hot. Do not touch.	
5 min	Electric shock	As high voltage still presents in the bus capacitor after power off, wait for at least five minutes (or 15 min / 25 min, depending on the warning symbols on the machine) after power off to prevent electric shock	5 min
	Read manual	Read the operation manual before operating on the equipment	
Note	Note	Procedures taken to ensure proper operation	**Note**

1.4 Safety guidelines

<table>
<tr><td></td><td>

- Only trained and qualified electricians are allowed to carry out related operations.
- Do not perform wiring, inspection or component replacement when power supply is applied. Ensure all the input power supplies are disconnected before wiring and inspection, and wait for at least the time designated on the Inverter or until the DC bus voltage is less than 36V. The minimum waiting time is listed in the table below.

<table>
<tr><th colspan="2">Inverter model</th><th>Minimum waiting time</th></tr>
<tr><td>400V</td><td>4–110kW</td><td>5 min</td></tr>
</table>

</td></tr>
<tr><td></td><td>

- Do not refit the Inverter unless authorized; otherwise, fire, electric shock or other injuries may occur.

</td></tr>
<tr><td></td><td>

- The base of the radiator may become hot during running. Do not touch to avoid hurt.

</td></tr>
<tr><td></td><td>

- The electrical parts and components inside the Inverter are electrostatic. Take measures to prevent electrostatic discharge during related operation.

</td></tr>
</table>

1.4.1 Delivery and installation

<table>
<tr><td></td><td>

- Install the Inverter on fire-retardant material and keep the Inverter away from combustible materials.
- Do not operate on a damaged or incomplete Inverter.
- Do not touch the Inverter with wet items or body parts; otherwise, electric shock may occur.

</td></tr>
</table>

Note:

- Select appropriate tools for delivery and installation to ensure a safe and proper running of the Inverter and avoid physical injury or death. To ensure physical safety, the installation staff should take mechanical protective measures like wearing exposure shoes and working uniforms.
- Ensure to avoid physical shock or vibration during delivery and installation;
- Do not carry the Inverter by its front cover only as the cover may fall off;
- Installation site should be away from children and other public places;
- The Inverter should be used in proper environment (see section 4.2.1 "Installation environment" for details);
- Prevent the screws, cables and other conductive parts from falling into the Inverter;
- As leakage current of the Inverter during running may exceed 3.5mA, ground properly and ensure the grounding resistance is less than 10Ω. The conductivity of PE grounding conductor is the same with that of the phase conductor. For models higher than 30 kW, the cross-sectional area of the PE grounding conductor can be slightly less than the recommended area.
- R, S and T are the power input terminals, and U, V and W are output motor terminals. Connect the input power cables and motor cables properly; otherwise, damage to the Inverter may occur.

1.4.2 Commissioning and running

	● Disconnect all power sources applied to the Inverter before terminal wiring, and wait for at least the time designated on the Inverter after disconnecting the power sources. ● High voltage presents inside the Inverter during running. Do not carry out any operation on the Inverter during running except for keypad setup. It must be noted that the control terminal of EV1000 inverter is ELV (Extra Low Voltage) circuit, which cannot be connected directly to the accessible terminals of other devices if no protective isolation measure is taken. For instance, RS485 terminal of the inverter can be connected to RS232 interface of the PC only after a converter with protective isolation is connected between them. ● The Inverter may start up by itself when P01.21 (restart after power down) is set to 1. Do not get close to the Inverter and motor. ● The Inverter cannot be used as "Emergency-stop device". ● The Inverter cannot act as an emergency brake for the motor; it is a must to install mechanical brake device. ● During driving permanent magnet synchronous motor, besides above-mentioned items, the following work must be done before installation and maintenance. 1. Disconnect all the input power sources including main power and control power. 2. Ensure the permanent-magnet synchronous motor has been stopped, and the voltage on output end of the Inverter is lower than 36V. 3. After the permanent-magnet synchronous motor is stopped, wait for at least the time designated on the Inverter, and ensure the voltage between "+" and "-" is lower than 36V. 4. During operation, it is a must to ensure the permanent-magnet synchronous motor cannot run again by the action of external load.

Note:

- Do not switch on or switch off input power sources of the Inverter frequently.
- For inverters that have been stored for a long time, set the capacitance and carry out inspection and pilot run on the Inverter before use.
- Close the front cover before running; otherwise, electric shock may occur.

1.4.3 Maintenance and component replacement

	● Only well-trained and qualified professionals are allowed to perform maintenance, inspection, and component replacement on the Inverter. ● Disconnect all the power sources applied to the Inverter before terminal wiring, and wait for at least the time designated on the Inverter after disconnecting the power sources. ● Take measures to prevent screws, cables and other conductive matters from falling into the Inverter during maintenance and component replacement.

Note:

- Use proper torque to tighten the screws.
- Keep the Inverter and its parts and components away from combustible materials during maintenance and component replacement.
- Do not carry out insulation voltage-endurance test on the Inverter, or measure the control circuits of the Inverter with megameter.
- Take proper anti-static measures on the Inverter and its internal parts during maintenance and component replacement.

1.4.4 Scrap treatment

	● The heavy metals inside the Inverter should be treated as industrial effluent.
	● When the life cycle ends, the product should enter the recycling system. Dispose of it separately at an appropriate collection point instead of placing it in the normal waste stream.

2 Quick Startup

2.1 What this chapter contains

This chapter introduces the basic principles required during installation commissioning. Users can realize quick installation commissioning by following these principles.

2.2 Unpack inspection

Check as follows after receiving products.

1. Check whether the packing box is damaged or dampened. If yes, contact local dealers or HITACHI offices.
2. Check the model identifier on the exterior surface of the packing box is consistent with the purchased model. If no, contact local dealers or HITACHI offices.
3. Check whether the interior surface of packing box is improper, for example, in wet condition, or whether the enclosure of the Inverter is damaged or cracked. If yes, contact local dealers or HITACHI offices.
4. Check whether the nameplate of the Inverter is consistent with the model identifier on the exterior surface of the packing box. If not, contact local dealers or HITACHI offices.
5. Check whether the accessories (including user's manual, control keypad and expansion card units) inside the packing box are complete. If not, contact local dealers or HITACHI offices.

2.3 Application confirmation

Check the following items before operating on the Inverter.

1. Verify the load mechanical type to be driven by the Inverter, and check whether overload occurred to the Inverter during actual application, or whether the Inverter power class needs to be enlarged?
2. Check whether the actual running current of load motor is less than rated Inverter current.
3. Check whether the control precision required by actual load is the same with the control precision provided by the Inverter.
4. Check whether the grid voltage is consistent with rated Inverter voltage.
5. Check whether the functions required need an optional expansion card to be realized.

2.4 Environment confirmation

Check the following items before use.

1. Check whether the ambient temperature of the Inverter during actual application exceeds 40°C, if yes, derate 1% for every additional 1°C. In addition, do not use the Inverter when the ambient temperature exceeds 50°C. **Note:** For cabinet-type Inverter, its ambient temperature is the air temperature inside the cabinet.
2. Check whether ambient temperature of the Inverter during actual application is below -10°C, if yes, install heating facility. **Note:** For cabinet-type Inverter, its ambient temperature is the air temperature inside the cabinet.

3.	Check whether the altitude of the application site exceeds 1000m. When the installation site altitude exceeds 1000m, derate 1% for every increase of 100m; when the installation site altitude exceeds 3000m, consult the local HITACHI dealer or office.
4.	Check whether the humidity of application site exceeds 90%, if yes, check whether condensation occurred, if condensation does exist, take additional protective measures.
5.	Check whether there is direct sunlight or animal intrusion in the application site, if yes, take additional protective measures.
6.	Check whether there is dust, explosive or combustible gases in the application site, if yes, take additional protective measures.

2.5 Installation confirmation

After the Inverter is installed properly, check the installation condition of the Inverter.

1.	Check whether the input power cable and current-carrying capacity of the motor cable fulfill actual load requirements.
2.	Check whether the Inverter is installed on fire-retardant materials; check whether the hot parts (reactors, brake resistors, etc.) are kept away from combustible materials.
3.	Check whether all the control cables are routed separately with power cables based on EMC requirement.
4.	Check whether all the grounding systems are grounded properly according to Inverter requirements.
5.	Check whether installation spacing of the Inverter complies with the requirements in operation manual.
6.	Check whether installation mode of the Inverter complies with the requirements in operation manual. Vertical installation should be adopted whenever possible.
7.	Check whether external connecting terminals of the Inverter are firm and tight enough, and whether the moment is up to the requirement.
8.	Check whether there are redundant screws, cables or other conductive objects inside the Inverter, if yes, take them out.

2.6 Basic commissioning

Carry out basic commissioning according to the following procedures before operating on the Inverter.

1.	Select motor type, set motor parameters and select Inverter control mode according to actual motor parameters.
2.	Whether autotuning is needed? If possible, disconnect the motor load to carry out dynamic parameter autotuning; if the load cannot be disconnected, perform static autotuning.
3.	Adjust the acceleration and deceleration time based on actual working conditions of the load.
4.	Jogging to carry out device commissioning. Check whether the motor running direction is consistent with the direction required, if no, it is recommended to change the motor running direction by exchanging the motor wiring of any two phases.
5.	Set all the control parameters, and carry out actual operation.

2.7 Safety standard related data

IEC/EN 61508 (Class A system)							ISO 13849**			
SIL	**PFH**	**HFT**	**SFF**	**λdu**	**λdd**	**PTI***	**PL**	**CCF**	**DC**	**Category**
2	$8.73x10^{-10}$	1	71.23%	$1.79x10^{-9}$	0	1 year	d	57	60%	3

* PTI: Proof test interval

** Depends on the classification defined on the EN ISO 13849-1.

3 Product Overview

3.1 What this chapter contains

This chapter mainly introduces the operation principles, product features, layouts, nameplates and model instructions.

3.2 Basic principle

The S1 IP55 high-ingress protection series Inverter is used to control asynchronous AC induction motor and permanent-magnet synchronous motor. The figure below shows the main circuit diagram of the Inverter. The rectifier converts 3PH AC voltage into DC voltage, and the capacitor bank of intermediate circuit stabilizes the DC voltage.

Figure 3-1 400V (4kW-15kW) main circuit diagram

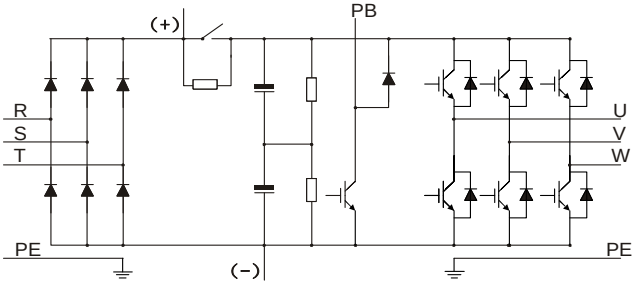

Figure 3-2 400V (18.5kW-110kW) main circuit diagram

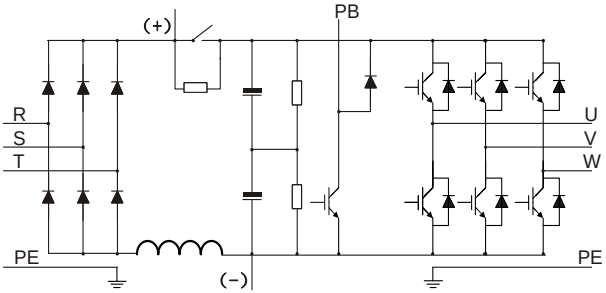

Note:

1. Inverters of 18.5kW-110kW are equipped with built-in DC reactors.
2. Built-in brake units are included in the standard configuration of 37kW or smaller models.

3.3 Product specification

Function description		Specification
Power input	Input voltage (V)	AC 3PH 380V (-15%)–440V (+10%) rated voltage:400V
	Input current (A)	Refer to Rated values.
	Input frequency (Hz)	50Hz or 60Hz, allowable range: 47–63Hz

Function description		Specification
Power output	Output voltage (V)	0–input voltage
	Output current (A)	Refer to Rated values.
	Output power (kW)	Refer to Rated values.
	Output frequency (Hz)	0–590Hz
Technical control performance	Control mode	Space voltage vector control, sensorless vector control (SVC), and feedback vector control (FVC)
	Motor type	Asynchronous motor, permanent-magnet synchronous motor
	Speed regulation ratio	Asynchronous motor 1: 200 (SVC); Synchronous motor 1: 20 (SVC), 1:1000 (FVC)
	Speed control precision	±0.2% (SVC), ±0.02% (FVC)
	Speed fluctuation	± 0.3% (SVC)
	Torque response	<20ms SVC) , <10ms (FVC)
	Torque control precision	10% (SVC) , 5% (FVC)
	Starting torque	Asynchronous motor: 0.25Hz/150% (SVC) Synchronous motor: 2.5 Hz/150% (SVC) 0Hz/200% (FVC)
	Overload capacity	ND: 150% of rated current: 1min; 180% of rated current: 10s; 200% of rated current: 1s; LD: 120% of rated current: 1min;
Running control performance	Frequency setup mode	Digital, analog, pulse frequency, multi-step speed running, simple PLC, PID, Modbus communication, etc; Realize switch-over between the set combination and the set channel
	Automatic voltage regulation function	Keep the output voltage constant when grid voltage changes
	Fault protection function	Fault protection function Provide over 30 kinds of fault protection functions: overcurrent, overvoltage, undervoltage, over-temperature, phase loss and overload, etc
	Speed tracking restart function	Realize impact-free starting of the motor in rotating
	Retention at transient voltage drop	Keeps running with regenerative energy when the grid transiently drops.
	Motor switchover	Supports two groups of motor parameters to control motor switchover.
Peripheral interface	Terminal analog input resolution	No more than 20mV
	Terminal digital input resolution	No more than 2ms
	Analog input	2 inputs, AI1: 0–10V/0–20mA; AI2: -10–10V

Function description		Specification
	Analog output	1 output, AO1: 0–10V /0–20mA
	Digital input	Four regular inputs; max. frequency: 1kHz; internal impedance: 3.3kΩ Two high-speed inputs; max. frequency: 50kHz;
	Digital output	One high-speed pulse output; max. frequency: 50kHz One Y terminal open collector output
	Relay output	Two programmable relay outputs RO1A NO, RO1B NC, RO1C common port RO2A NO, RO2B NC, RO2C common port Contact capacity: 3A/AC250V, 1A/DC30V
	Extension interface	Three extension interfaces: SLOT1, SLOT2, SLOT3 Expandable PG card, programmable expansion card, communication card, I/O card, and so on.
Others	Installation mode	Support wall-mounting and flange-mounting
	Operation ambient temperature	-10–50°C
	Ingress protection rating	IP55
	Cooling mode	Forced-air cooling
	Brake unit	Built-in brake units are included in the standard configuration of 37kW or lower Inverters.
	EMC filter	Conducted emissions of all models meet the requirements of C3 in the IEC/EN 61800-3 standard. The product offers the 30m motor cable, meeting the C3 requirements.
	STO certification level	Meet the SIL2 level

3.4 Product nameplate

Figure 3-3 Product nameplate

3.5 Product model

Figure 3-4 Product model

S1-00170 HFEF-55 M

① ② ③ ④ ⑤

Table 3-1 Description of product models

Field	Sign	Description	Example
Product Category	①	Abbreviation of product series	S1: Standard multi-function Inverter
Rated current	②	Rated output current in LD	00170: 17.0A continuous output current
Version	③	Version	H: AC 3PH 380V (-15%) – 440V (+ 10%) Rated voltage: 400V F: built-in operator E: European version F: built-in EMC filter
Ingress protection rating	④	Ingress protection rating	55: IP55 ingress protection rating (It is impossible to completely prevent dust from entering, but the amount of dust from entering will not cause damage to the equipment. It will not cause damage when the product under normal installation state is immersed in water from each direction).
Accessory identifier	⑤	AC input switch	M: Standard AC input switch

3.6 Rated values

Product model	Power class (kW)	Input current(A)		Output current(A)	
		ND rating	LD rating	ND rating	LD rating
S1-00125HFEF-55M	4/5.5	13.5	19.5	9.5	12.5
S1-00170HFEF-55M	5.5/7.5	19.5	23	14	17
S1-00230HFEF-55M	7.5/11	25	30	18.5	23
S1-00320HFEF-55M	11/15	32	40	25	32
S1-00380HFEF-55M	15/18.5	40	45	32	38
S1-00450HFEF-55M	18.5/22	45	51	38	45
S1-00600HFEF-55M	22/30	51	64	45	60
S1-00750HFEF-55M	30/37	64	80	60	75
S1-00920HFEF-55M	37/45	80	98	75	92
S1-01150HFEF-55M	45/55	100	128	92	115
S1-01500HFEF-55M	55/75	128	139	115	150
S1-01700HFEF-55M	75/90	139	168	150	170
S1-02150HFEF-55M	90/110	168	201	180	215
S1-02150HFEF-55MND	110	201	/	215	/

3.7 Structure diagram

The Inverter layout is shown in the figure below (take a 15kW Inverter as an example).

Figure 3-5 Structure diagram

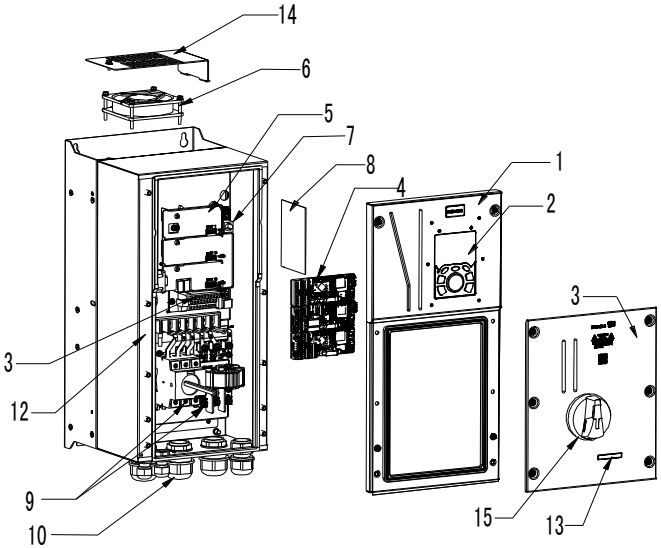

No.	Name	Instruction
1	Upper cover	Protect internal components and parts
2	Keypad	For details, see section 5.4 "Operating the Inverter through the keypad"
3	Lower cover	Protect internal components and parts
4	Expansion card	Optional part. For details, see Appendix A "Expansion cards"
5	Baffle of control board	Protect the control board and install expansion card
6	Cooling fan	For details, see 8 "Maintenance"
7	Keypad interface	Connect the keypad
8	Nameplate	For details, see 3 "Product Overview"
9	Main circuit terminal	For details, see 4 "Installation guide"
10	Control terminals	For details, see 4 "Installation guide"
11	Waterproof connector	Lock and secure connection cables
12	POWER indicator	Power indicator
13	Label of S1 IP55 product series	For details, see section 3.5 "Product model" of this chapter
14	Baffle of fan	Protect the fan.
15	Switch handle	Control the main circuit power.

4 Installation guide

4.1 What this chapter contains

This chapter introduces the mechanical and electrical installations of the Inverter.

	• Only well trained and qualified professionals are allowed to carry out the operations mentioned in this chapter. Please carry out operations according to instructions presented in 1 "Safety Precautions". Ignoring these safety precautions may lead to physical injury or death, or device damage. • Ensure the Inverter power is disconnected before installation. If the Inverter has been powered on, disconnect the Inverter and wait for at least the time designated on the Inverter, and ensure the POWER indicator is off. Users are recommended to use a multimeter to check and ensure the Inverter DC bus voltage is below 36V. • Installation must be designed and done according to applicable local laws and regulations. HITACHI does not assume any liability whatsoever for any installation which breaches local laws and regulations. If recommendations given by HITACHI are not followed, the Inverter may experience problems that the warranty does not cover.

4.2 Mechanical installation

4.2.1 Installation environment

Installation environment is essential for the Inverter to operate at its best in the long run. The installation environment of the Inverter should meet the following requirements.

Environment	Condition
Installation site	Indoors
Ambient temperature	• -10–+50°C; • When the ambient temperature exceeds 40°C, derate 1% for every additional 1°C; • It is not recommended to use the Inverter when the ambient temperature is above 50°C; • In order to improve reliability, do not use the Inverter in cases where the temperature changes rapidly; • When the Inverter is used in a closed space e.g. control cabinet, use cooling fan or air conditioner to prevent internal temperature from exceeding the temperature required; • When the temperature is too low, if restart a Inverter which has been idled for a long time, it is required to install external heating device before use to eliminate the freeze inside the Inverter, failing to do so may cause damage to the Inverter.
Humidity	• The relative humidity (RH) of the air is less than 90%; • The max RH cannot exceed 60% in the environment where there are corrosive gases.
Storage temperature	-30–+60°C

Environment	Condition
Running environment	The installation site should meet the following requirements. ● Away from electromagnetic radiation sources; ● Away from oil mist, corrosive gases and combustible gases; ● Ensure foreign object like metal powder will not fall into the Inverter (do not install the Inverter onto combustible object like wood); ● Away from radioactive substance and combustible objects; ● Away from corrosive liquid; ● Low salt content; ● No direct sunlight
Altitude	● Below 1000m; ● When the installation site altitude exceeds 1000m, derate 1% for every increase of 100m; when the installation site altitude exceeds 3000m, consult the local HITACHI dealer or office.
Vibration	Up to 5.8m/s^2 (0.6g)
Installation direction	Install the Inverter vertically to ensure good heat dissipation effect.

Note: Inverters must be installed in ventilated environments free of corrosive gases and conductive dust.

4.2.2 Installation direction

The Inverter can be installed on the wall or in a cabinet.

The Inverter must be installed vertically. Check the installation position according to following requirements. See Appendix C "Dimension drawings" for detailed outline dimensions.

Figure 4-1 Installation direction of the Inverter

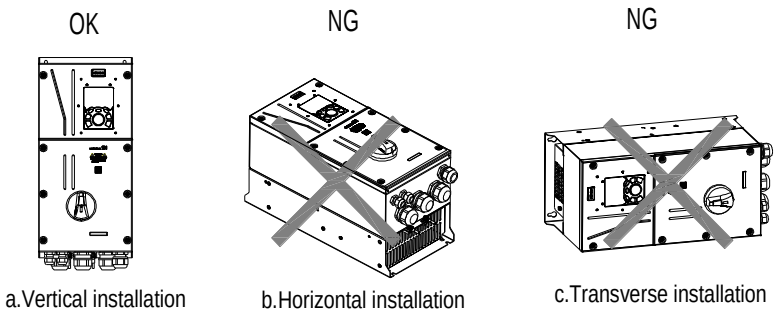

4.2.3 Installation mode

The Inverters can be installed in two modes, depending on the different Inverter dimensions:

Figure 4-2 Installation mode

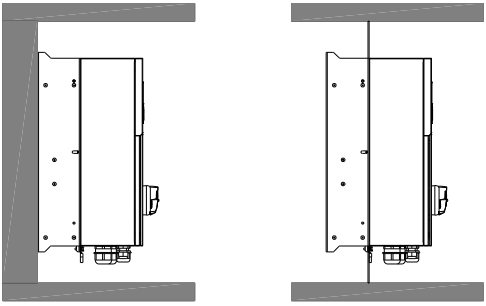

Wall-mounting Flange-mounting

(1) Mark the position of the installation hole. See Appendix C "Dimension drawings" for the position of installation hole;

(2) Mount the screws or bolts onto the designated position;

(3) Put the Inverter on the wall;

(4) Tighten the fixing screws on the wall.

Note: Flange-mounting plate is a must for 4-110kW Inverters that adopt flange-mounting mode.

4.2.4 Single-unit installation

Figure 4-3 Single-unit installation

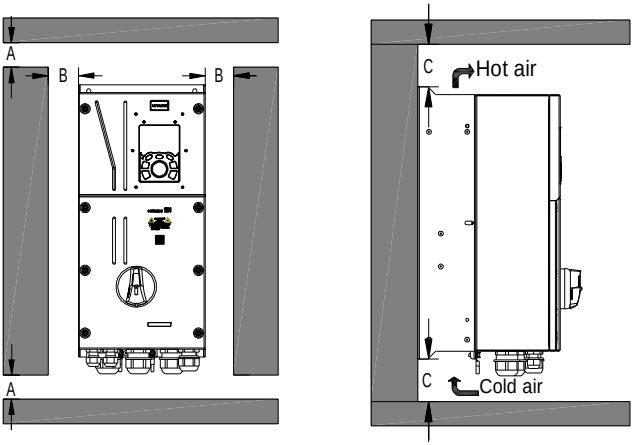

Note: The min. dimension of A, B, and C is 100mm.

4.2.5 Multiple-unit installation

Figure 4-4 Parallel installation

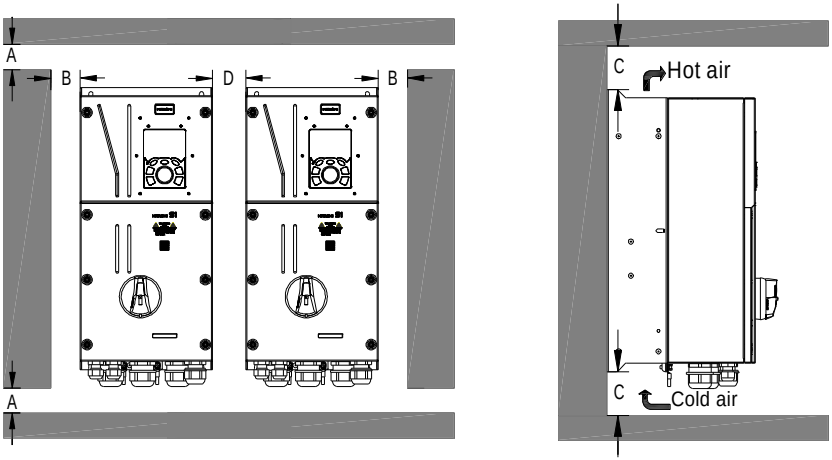

Note:

1. When users install Inverters in different sizes, align the top of each Inverter before installation for the convenience of future maintenance.
2. The min dimension of A, B, and C is 100mm, and the dimension of D can be 0, that is zero-clearance parallel installation is supported.

4.2.6 Vertical installation

Figure 4-5 Vertical installation

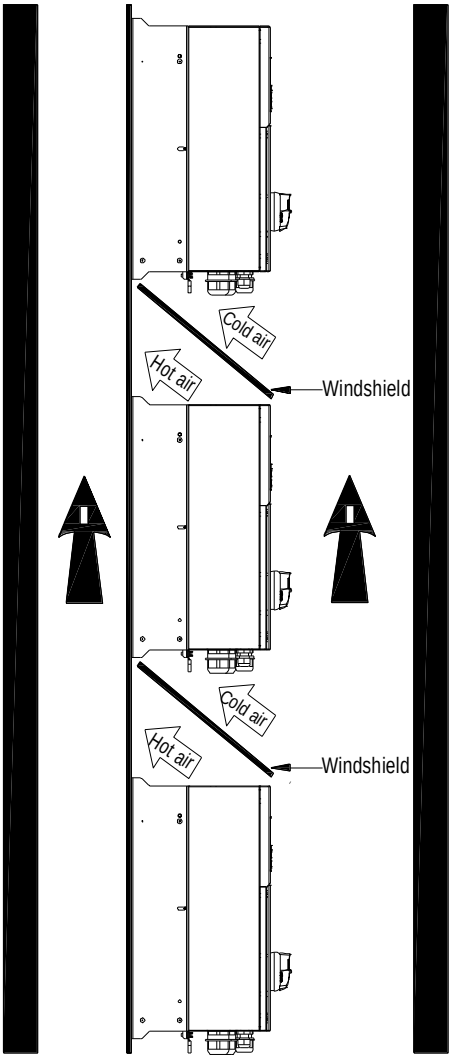

Note: During vertical installation, users must install windshield, otherwise, the Inverter will experience mutual interference, and the heat dissipation effect will be degraded.

4.2.7 Tilted installation

Figure 4-6 Tilted installation

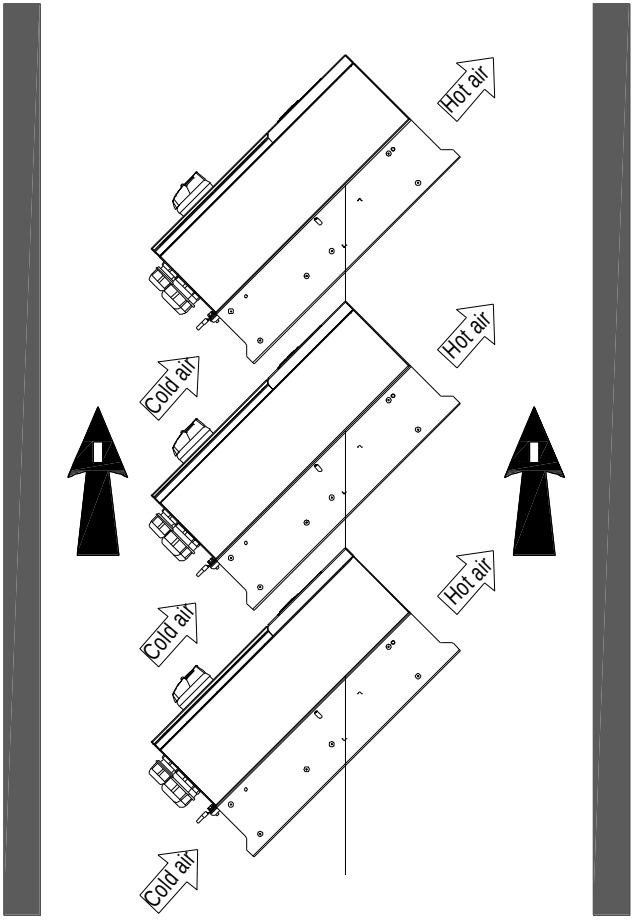

Note: During tilted installation, it is a must to ensure the air inlet duct and air outlet duct are separated from each other to avoid mutual interference.

4.3 Standard wiring of main circuit

4.3.1 Wiring diagram of main circuit

Figure 4-7 Main circuit wiring diagram

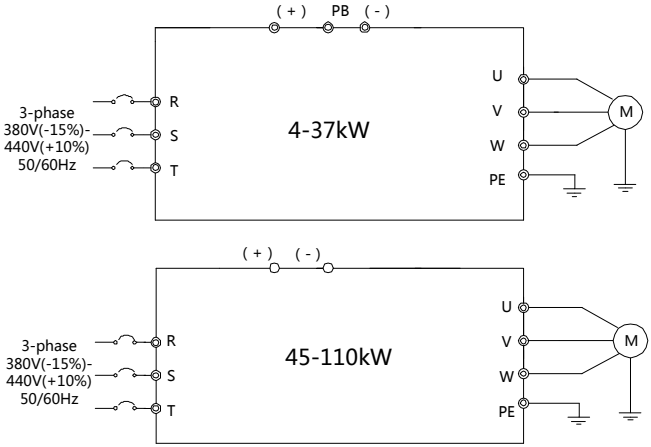

4.3.2 Main circuit terminal diagram

Figure 4-8 4-5.5kW

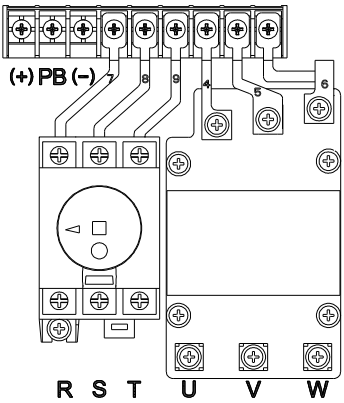

Figure 4-9 7.5-15kW

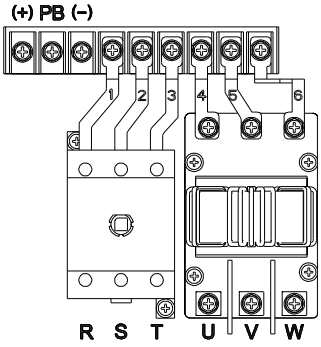

Figure 4-10 18.5-22kW

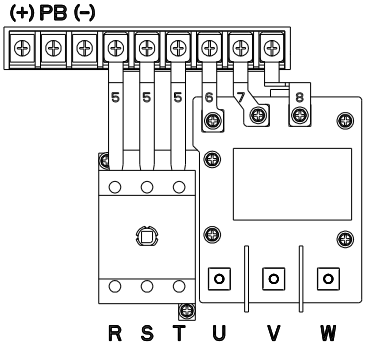

Figure 4-11 30-37kW

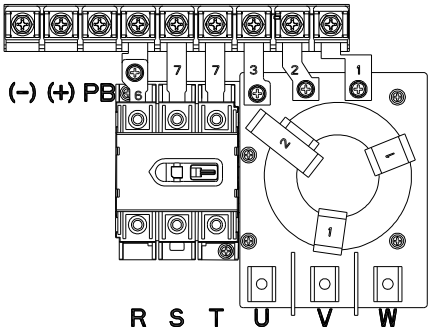

Figure 4-12 45-55kW

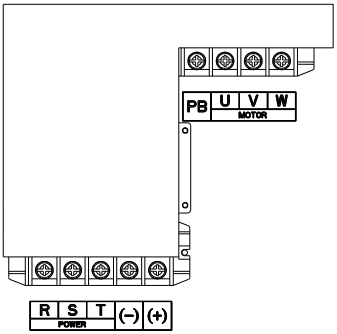

Figure 4-13 75-110kW

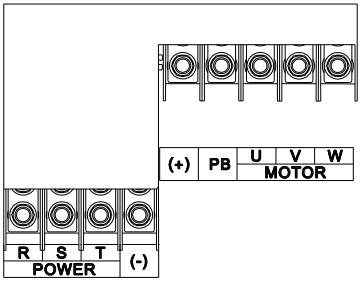

Terminal sign	Terminal name	Function description
R, S, T	Main circuit power input	3PH AC input terminal, connect to the grid
U, V, W	Inverter output	3PH AC output terminal, connect to the motor
(+)	Brake unit terminal 1/Brake resistor terminal 1	(+) and (-) are connected with the terminals of brake unit. PB and (+) are connected with the terminals of brake resistor.
(-)	Brake unit terminal 2	
PB	Brake resistor terminal 2	
PE	Grounding terminal for safe protection	Grounding resistor is less than 10 ohm; each machine must carry two PE terminals and proper grounding is required

Note:

1. It is not recommended to use asymmetrical motor cable. If there is a symmetrical grounding conductor in the motor cable besides the conductive shielded layer, ground the grounding conductor on the Inverter end and motor end.
2. Route the motor cable, input power cable and control cables separately.

4.3.3 Wiring process of the main circuit terminals

1. Connect the grounding line of the input power cable to the grounding terminal (PE) of the Inverter, and connect the 3PH input cable to R, S and T terminals and tighten up.

2. Connect the grounding line of the motor cable to the grounding terminal of the Inverter, and connect 3PH motor cable to U, V and W terminals and tighten up.
3. Connect the brake resistor which carries cables to the designated position.
4. Fix all the cables outside the Inverter mechanically if allowed.

Figure 4-14 Screw installation diagram

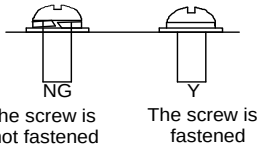

4.4 Standard wiring of control circuit

4.4.1 Wiring diagram of basic control circuit

Figure 4-15 Wiring diagram of control circuit

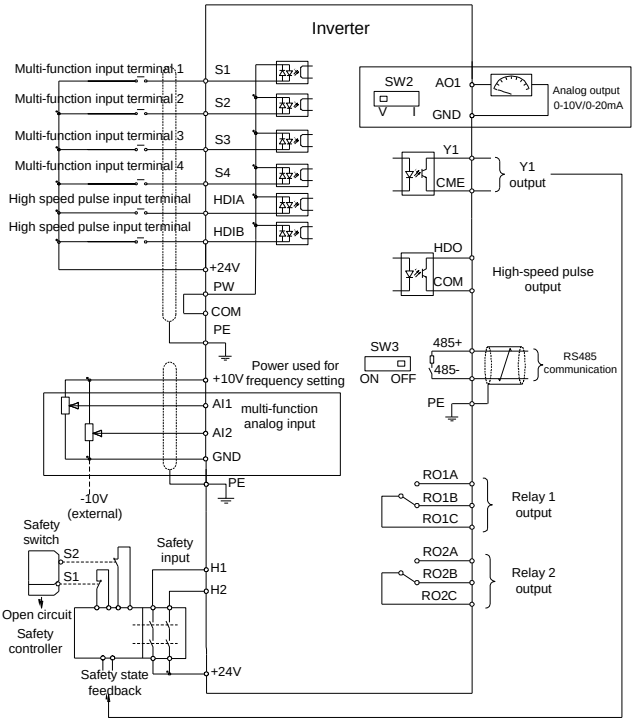

Note: If wire-passing board outlet space is insufficient when all terminals on the control board are wired, cut the knock-out hole on the lower cover for wire outlet. If a dangerous situation occurs when the knock-out hole is cut for a purpose but not wire outlet, we will not bear any responsibility.

Terminal name	Instruction
+10V	The Inverter provides +10.5V power
AI1	1. Input range: AI1 voltage/current can choose 0–10/ 0–20mA; AI2: -10V–+10V voltage; 2. Input impedance: 20kΩ during voltage input; 250Ω during current input; 3. AI1 voltage or current input is set by P05.50; 4. Resolution ratio: When 10V corresponds to 50Hz, the min. resolution ratio is 5mV; 5. 25°C, When input above 5V or 10mA, the error is ±0.5%
AI2	
GND	Reference ground of +10.5V
AO1	1. Output range: 0–10V voltage or 0–20mA current 2. Voltage or current output is set by toggle switch SW2; 3. 25°C, when input above 5V or 10mA, the error is ±0.5%.
RO1A	RO1 relay output; RO1A is NO, RO1B is NC, RO1C is common port Contact capacity: 3A/AC250V, 1A/DC30V
RO1B	
RO1C	
RO2A	RO2 relay output; RO2A is NO, RO2B is NC, RO2C is common port Contact capacity: 3A/AC250V, 1A/DC30V
RO2B	
RO2C	
HDO	1. Switch capacity: 50mA/30V; 2. Range of output frequency: 0–50kHz 3. Duty ratio: 50%
COM	Reference ground of +24V
CME	Common port of open collector output
Y1	1. Switch capacity: 50mA/30V; 2. Range of output frequency: 0–1kHz
485+	485 communication port, 485 differential signal port and standard 485 communication interface should use shielded twisted pair; the 120ohm terminal matching resistor of 485 communication is connected by toggle switch SW3.
485-	
PE	Grounding terminal
PW	External power input terminal for digital input circuits Voltage range: 12–30V
24V	The Inverter provides user power; the max. output current is 200mA
S1	Digital input 1 — 1. Internal impedance: 3.3kΩ 2. Accept 12–30V voltage input 3. This terminal is bi-directional input terminal and supports NPN/PNP connection modes 4. Max. input frequency: 1kHz 5. All are programmable digital input terminals, users can set the terminal function via function codes
S2	Digital input 2
S3	Digital input 3
S4	Digital input 4
HDIA	Channels for both high frequency pulse input and S1–S4 function inputs Max. input frequency: 50kHz; Duty ratio: 30%–70%; Supports the input of a quadrature encoder with 24V power supply; equipped with speed-measurement function
HDIB	

Terminal name	Instruction	
+24V—H1	STO input 1	1. Safe torque off (STO) redundant input, connect to external NC contact, STO acts when the contact opens, and the Inverter stops output; 2. Safety input signal wires use shielded wire whose length is within 25m; 3. H1 and H2 terminals are short connected to +24V by default; it is required to remove the jumper on the terminal before using STO function.
+24V—H2	STO input 2	

4.4.2 Input/output signal connection diagram

Set NPN/PNP mode and internal/external power via U-shaped jumper. PNP internal mode is adopted by default.

Figure 4-16 Position of U-shaped jumper

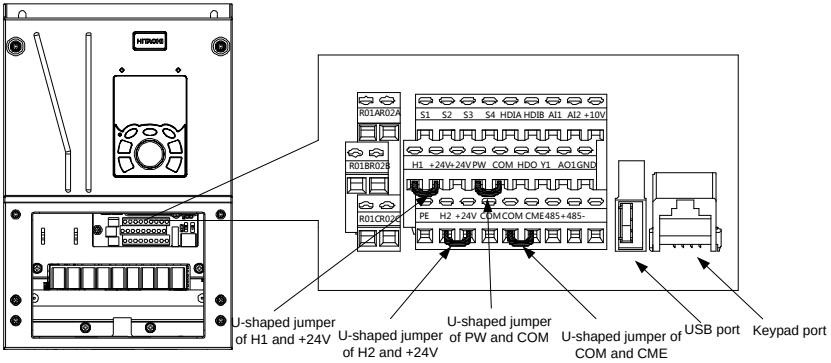

If input signal comes from NPN transistors, set the U-shaped jumper between +24V and PW based on the power used according to the figure below.

Figure 4-17 NPN mode

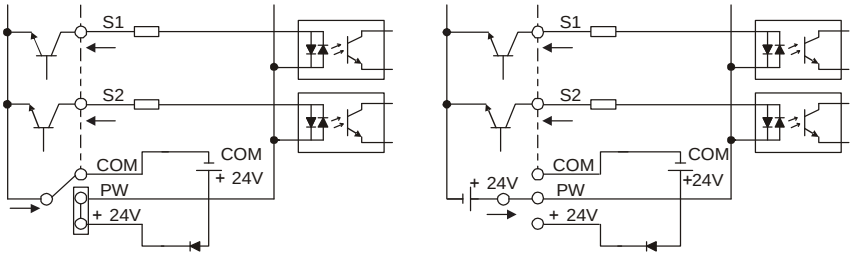

Internal power（NPN mode） External power（NPN mode）

If input signal comes from PNP transistor, set the U-shaped jumper based on the power used according to the figure below.

Figure 4-18 PNP mode

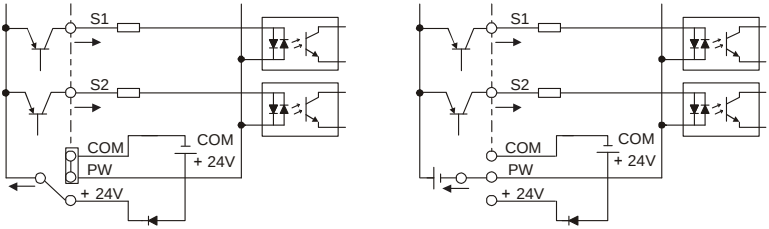

Internal power (PNP mode) External power (PNP mode)

4.5 Wiring protection

4.5.1 Protect the Inverter and input power cable in short-circuit

Protect the Inverter and input power cable during short-circuit to avoid thermal overload.

Carry out protective measures according to the following requirements.

Figure 4-19 Fuse configuration

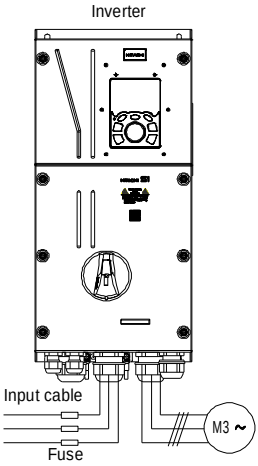

Note: Select the fuse according to operation manual. During short-circuit, the fuse will protect input power cables to avoid damage to the Inverter; when internal short-circuit occurred to the Inverter, it can protect neighboring equipment from being damaged.

4.5.2 Protect the motor and motor cable in short circuit

If the motor cable is selected based on rated Inverter current, the Inverter will be able to protect the motor cable and motor during short circuit without other protective devices.

	● If the Inverter is connected to multiple motors, it is a must to use a separated thermal overload switch or breaker to protect the cable and motor, which may require the fuse to cut off the short circuit current.

4.5.3 Protect motor and prevent thermal overload

According to the requirements, the motor must be protected to prevent thermal overload. Once overload is detected, users must cut off the current. The Inverter is equipped with motor thermal overload protection function, which will block output and cut off the current (if necessary) to protect the motor.

4.5.4 Bypass connection

In some critical occasions, industrial frequency conversion circuit is necessary to ensure proper operation of the system when Inverter fault occurs.

In some special cases, e.g., only soft startup is needed, it will converts to power-frequency operation directly after soft startup, corresponding bypass link is also needed.

	● Do not connect any power source to Inverter output terminals U, V and W. The voltage applied to motor cable may cause permanent damage to the Inverter.

If frequent switch-over is needed, users can use the switch which carries mechanical interlock or a contactor to ensure motor terminals will not be connected to input power cables and Inverter output ends simultaneously.

5 Basic Operation Instructions

5.1 What this chapter contains

This chapter tells users how to use the Inverter keypad and the commissioning procedures for common functions of the Inverter.

5.2 Keypad introduction

LCD keypad is included in the standard configuration of S1 IP55 series Inverters. Users can control the Inverter start/stop, read state data and set parameters via keypad.

Figure 5-1 Keypad diagram

Note:

1. LCD keypad is armed with real-time clock, which can run properly after power off when installed with batteries. The clock battery (type: CR2032) should be purchased by the user separately.
2. LCD keypad support parameter-copy.

No.	Name	Instruction		
1	State Indicator	(1)	RUN	Running indicator; LED off – the Inverter is stopped; LED blinking – the Inverter is in parameter autotune LED on – the Inverter is running
		2)	TRIP	Fault indicator; LED on – in fault state LED off – in normal state LED blinking – in pre-alarm state
		(3)	QUICK/JOG	Short-cut key indicator, which displays different state under different functions, see definition of QUICK/JOG key for details

No.	Name	Instruction			
2	Button area	(4)		Function key	The function of function key varies with the menu; The function of function key is displayed in the footer
		(5)			
		(6)			
		(7)		Short-cut key	Re-definable. It is defined as JOG function by default, namely jogging. The function of short-cut key can be set by the ones of P07.02, as shown below. 0: No function ; 1: Jogging (linkage indicator (3); logic : NO); 2: Reserved; 3: FWD/REV switch-over (linkage indicator (3); logic: NC) ; 4: Clear UP/DOWN setting (linkage indicator (3) logic: NC) ; 5: Coast to stop (linkage indicator (3); logic: NC) ; 6: Switching running command reference mode in order (linkage indicator (3); logic: NC) ; 7: Reserved; **Note:** After restoring to default values, the default function of short-cut key (7) is 1.
		(8)		Confirmation key	The function of confirmation key varies with menus, eg confirming parameter setup, confirming parameter selection, entering the next menu, etc.
		(9)		Running key	Under keypad operation mode, the running key is used for running operation or autotuning operation.
		(10)		Stop/ Reset key	During running state, press the Stop/Reset key can stop running or autotuning; this key is limited by P07.04. During fault alarm state, all the control modes can be reset by this key.
		(11)		Direction key UP: DOWN: LEFT: RIGHT:	UP: The function of UP key varies with interfaces, eg shifting up the displayed item, shifting up the selected item, changing digits, etc; DOWN: The function of DOWN key varies with interfaces, eg shifting down the displayed item, shifting down the selected item, changing digits, etc; LEFT: The function of LEFT key varies

No.	Name	Instruction			
					with interfaces, eg switch over the monitoring interface, eg shifting the cursor leftward, exiting current menu and returning to previous menu, etc; RIGHT: The function of RIGHT key varies with interfaces, eg switch over the monitoring interface, shifting the cursor rightward, enter the next menu etc.
3	Display area	(12)	LCD	Display screen	240×160 dot-matrix LCD; display three monitoring parameters or six sub-menu items simultaneously
4	Others	(13)	RJ45 interface	RJ45 interface	RJ45 interface is used to connect to the Inverter.
		(14)	Battery holder	Clock battery holder	The battery holder is used for replacing or installing a battery for the clock.
		(15)	USB terminal	mini USB terminal	Mini USB terminal is used to connect to the USB flash drive through an adapter.

The LCD has different display areas, which displays different contents under different interfaces. The figure below is the main interface of stop state.

Figure 5-2 Main interface of LCD

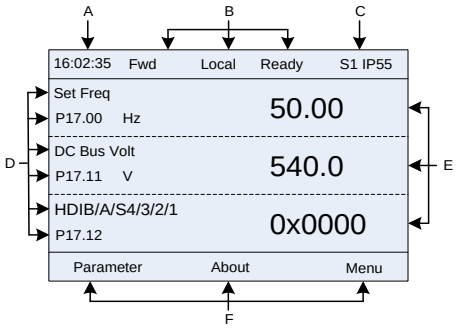

Area	Name	Displayed contents
Header A	Real-time display area	Display the real-time; clock battery is not included; the time needs to be reset when powering on the Inverter
Header B	Inverter running state display area	Display the running state of the Inverter: play motor rotating direction: "Fwd" – Run forward during operation; "Rev" – Run reversely during operation; "Disrev" – Reverse running is forbidden; 2. Display Inverter running command channel: "Local"–Keypad; "Trml"–Terminal; "Remote"–Communication 3. Display current running state of the Inverter : "Ready" – The Inverter is in stop state (no fault); "Run" – The Inverter is in running state; "Jog"–The Inverter is in

Area	Name	Displayed contents
		jogging state; "Pre-alarm"–the Inverter is under pre-alarm state during running; "Fault"–Inverter fault occurred.
Header C	Inverter model display area	1. Display Inverter model;
Display D	Parameter names and function codes on the inverter homepage	Display a maximum of three parameter names and function codes on the homepage. The parameters displayed on the homepage can be managed.
Display E	Values of parameters on the inverter homepage	Display the values of parameters on the Inverter homepage, which are updated in real time.
Footer F	Corresponding menu of function keys (4), (5), and (6)	Indicate the menus corresponding to function keys (4), (5) and (6). The corresponding menus of function keys (4), (5) and (6) vary with interfaces, and the content displayed in this area varies also.

5.3 Keypad display

The inverter keypad can display the stopped-state parameters, running-state parameters, function parameter editing status, and fault alarm status.

5.3.1 Stop parameter display state

When the Inverter is in stopped state, the keypad displays stopped-state parameters, and this interface is the main interface during power-up by default. In stopped state, parameters in various states can be displayed. Press ▲ or ▼ to shift the displayed parameter up or down.

Figure 5-3 Stopped-state parameter display 1

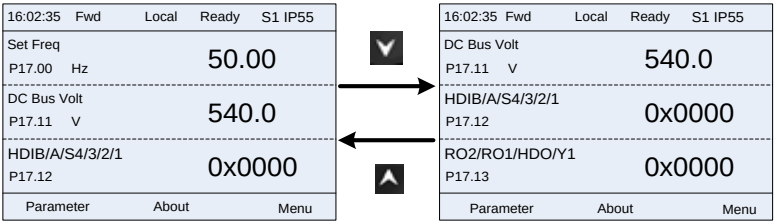

Press ◀ or ▶ to switch between different display styles, including list display style and progress bar display style.

Figure 5-4 Stopped-state parameter display state

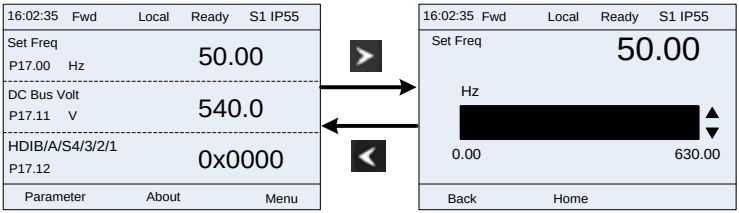

The stopped-state parameter display list is user defined, and each state variable function code can be added to the stopped-state parameter display list as needed. A function code which has been added to the stopped-state parameter display list can also be deleted or shifted.

5.3.2 Displaying running-state parameters

After receiving valid running command, the Inverter will enter running state, and the keypad displays running state parameter with RUN indicator on the keypad turning on. In running state, multiple kinds of state parameters can be displayed. Press ▲ or ▼ to shift the displayed parameter up or down.

Figure 5-5 Running-state parameter display 1

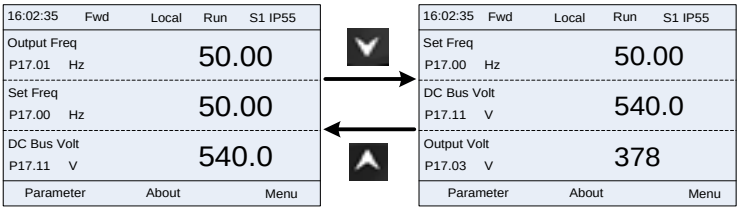

Press ◀ or ▶ to switch between different display styles, including list display style and progress bar display style.

Figure 5-6 Running-state parameter display state 2

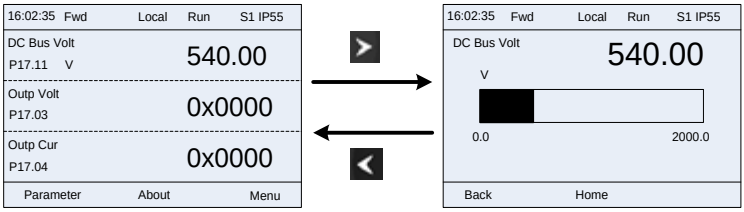

In running state, multiple kinds of state parameters can be displayed. The running display parameter list is user defined, and each state variable function code can be added to the running display parameter list as needed. A function code which has been added to the running display parameter list can also be deleted or shifted.

5.3.3 Displaying fault information

The Inverter enters fault alarm display state once fault signal is detected, and the keypad displays fault code and fault information with TRIP indicator on the keypad turning on. Fault reset operation can be carried out via STOP/RST key, control terminal or communication command.

The fault code will be kept displaying until fault is removed.

Figure 5-7 Fault alarm display state

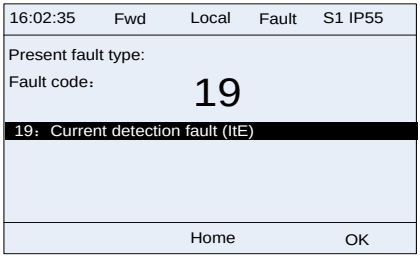

5.4 Operating the Inverter through the keypad

Various operations can be performed on the Inverter through the keypad, including entering/exiting menu, parameter selection, list modification and parameter addition.

5.4.1 Enter/exit menu

The keypad displays three main menus at the home interface by default: **Parameter**, **About**, and **Menu**. The following figure shows how to enter the **Parameter** main menu and how to operate under this main menu.

Figure 5-8 Enter/exit menu diagram 1

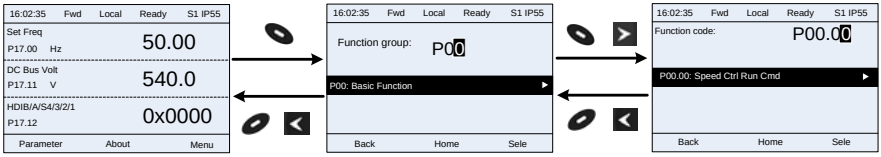

The following figure shows how to enter the **Menu** main menu and how to operate under this main menu.

Figure 5-9 Enter/exit menu diagram 2

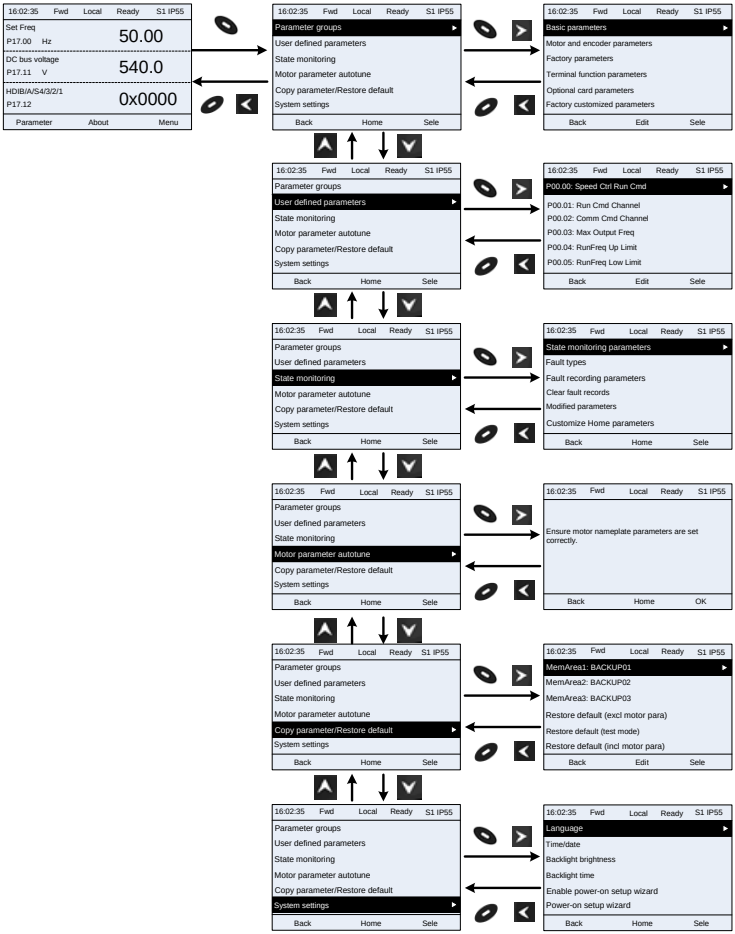

The keypad menu setup is shown as follows.

Level 1	Level 2	Level 3	Level 4
Parameter groups	Basic parameters	P00: Basic Function	P00.xx
		P01: Start/stop control	P01.xx
		P03: Motor1 Vector Ctrol	P03.xx
		P04: V/F Control	P04.xx
		P07: HMI	P07.xx
		P08: Enhanced Function	P08.xx
		P09: PID Control	P09.xx
		P10: PLC&Mul-stepSpCtrl	P10.xx
		P11: Protection Param	P11.xx
		P13: SM Ctrl Param	P13.xx
		P14: Serial Comm Func	P14.xx
		P21: Position Ctrl	P21.xx
		P22: Spdl Positioning	P22.xx
		P23: Motor 2 Vector Ctrl	P23.xx
	Motor and encoder parameters	P02: Motor 1 Param	P02.xx
		P12: Motor 2 Param	P12.xx
		P20: Motor 1 Encoder	P20.xx
		P24: Motor 2 Encoder	P24.xx
	Factory parameters	P99: Factory Func	P99.xx
	Terminal function parameters	P05: Input Terminals	P05.xx
		P06: Output Terminals	P06.xx
		P98: AIAO Calibration	P98.xx
	Optional card parameters	P15: Comm Ex-card 1	P15.xx
		P16: Comm Ex-card 2	P16.xx
		P25: Ex I/OCard InpFunc	P25.xx
		P26: Ex I/OCard OutpFunc	P26.xx
		P27: PLC Func	P27.xx
		P28: Master/slave Ctrl	P28.xx
	Factory customized parameters	P90: Tension control speed mode	P90.xx
		P91: Tension control torque	P91.xx
		P92: Tension control optimization	P92.xx
User defined parameters	/	/	Pxx.xx ...
State monitoring	State monitoring	P07: HMI	P07.xx
		P17: State Viewing Func	P17.xx
		P18: CI-IpCtrlStateView	P18.xx

Level 1	Level 2	Level 3	Level 4
	parameters	P19: Ex-card StateView	P19.xx
		P93: Tension control state viewing func	P93.xx
	Fault types	/	P07.27: TypeofLatelyFault
			P07.28: Typeof1stLastFault
			P07.29: Typeof2ndLastFault
			P07.30: Typeof3rdLastFault
			P07.31: Typeof4thLastFault
			P07.32: Typeof5thLastFault
	Fault recording parameters	/	P07.33: RunFreq atLatelyFault ... P07.xx: xx state of fault xx
	Clear fault records	/	Sure to clear fault records?
	Modified parameters	/	Pxx.xx: Modified parameter 1
			Pxx.xx: Modified parameter 2
			Pxx.xx: Modified parameter xx
	Customize Home parameters	Stopped-state parameters	/
		Running-state parameters	/
Motor parameter autotune	/	Ensure motor nameplate parameters are set correctly.	Complete para rotary autotune
			Complete para static autotune
			Partial para static autotune
			Complete para rotary autotune 2 (for AM)
			Partial para static autotune 2 (for AM)
Copy parameter/Restore default	/	MemArea1: BACKUP01	Upload local func para to keypad
			Download all func para from keypad
			Download NonMotor func para from keypad

Level 1	Level 2	Level 3	Level 4
			Download motor func para from keypad
		MemArea2: BACKUP012	Upload local func para to keypad
			Download all func para from keypad
			Download NonMotor func para from keypad
			Download motor func para from keypad
		MemArea3: BACKUP03	Upload local func para to keypad
			Download all func para from keypad
			Download NonMotor func para from keypad
			Download motor func para from keypad
		Restore default (excl motor para)	Sure to restore defaults (excl motor para)?
		Restore default (test mode)	Sure to restore default (test mode)?
		Restore default (incl motor para)	Sure to restore default (incl motor para)?
System settings	/	/	Language
			Time/date
			Backlight brightness
			Backlight time
			Enable power-on setup wizard
			Power-on setup wizard
			Keypad programming
			Fault time setting
			Control board programming
			Up/Down key sensitivity

5.4.2 Editing a parameter list

The parameters in the parameter list in stopped state can be added as needed (through the menu of user defined home parameters), and the list can also be edited such as "Move up", "Move down", "Delete from the list", and "Restore default". The edit function is shown in the following.

Figure 5-10 List edit diagram 1

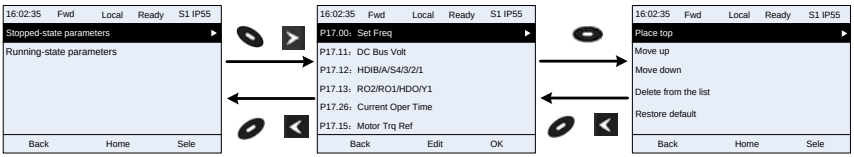

Press key to enter edit interface, select the operation needed, and press key, key or Enter key to confirm the edit operation and return to the previous menu (parameter list), the returned list is the list edited. If key or key is pressed in edit interface without any selection, it will return to the previous menu (parameter list remain unchanged).

Note: For the parameter objects in the list header, move-up operation will be invalid, and the same principle can be applied to the parameter objects in the list footer; after deleting a certain parameter, the parameter objects under it will be moved up automatically.

The items in the parameter list in running state can be added as needed (through the menu of user defined home parameters), and the list can also be edited such as "Move up", "Move down", "Delete from the list", and "Restore default parameters". The edit function is shown in the interface below.

Figure 5-11 List edit diagram 2

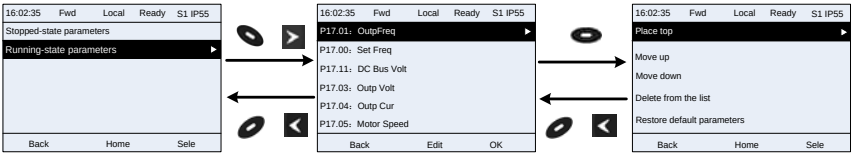

The parameters of user defined parameter setting can be added, deleted or adjusted as needed, such as "Move up", "Move down", "Delete from the list", and "Restore default parameters"; the adding function can be set in a certain function code in a function group. The edit function is shown in the figure below.

Figure 5-12 List edit diagram 3

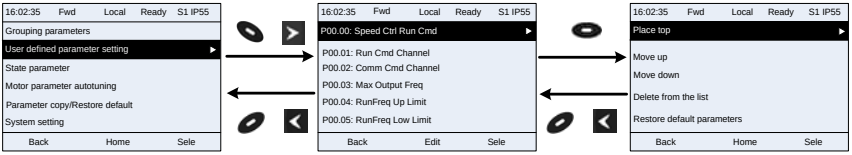

5.4.3 Adding parameters to the parameter list displayed in stopped/running state

You can choose **Menu** > **State monitoring**, choose a submenu, enter a specific function group and then a specific function code to add the parameter to the list of parameters displayed in stopped state or parameters displayed in running state.

Figure 5-13 Adding parameter diagram 1

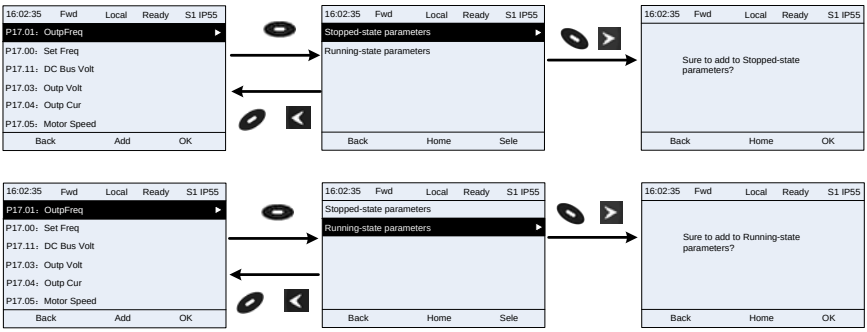

After selecting a specific function code, press key to enter the parameter addition interface, and then press key, key or Enter key to confirm the addition operation. If this parameter is not included in the list of parameters displayed in stopped state or parameters displayed in running state, the parameter added will be at the end of the list; if the parameter is already in the list of parameters displayed in stopped state or parameters displayed in running state, the addition operation will be invalid. If key or key is pressed without any selection in the addition interface, it will return to previous menu.

Part of the monitoring parameters in P07 HMI group can be added to the list of parameters displayed in stopped state or parameters displayed in running state. All the parameters in P17, P18 and P19 group can be added to the list of parameters displayed in stopped state or parameters displayed in running state.

Up to 16 monitoring parameters can be added to the list of parameters displayed in stopped state; and up to 32 monitoring parameters can be added to the list of parameters displayed in running state.

5.4.4 Adding parameters to the user defined parameter list

You can choose **Menu** > **Parameter** groups, choose a submenu, and enter a specific function group and then a specific function code to add the parameter to the user defined parameter list.

Figure 5-14 Adding parameter diagram 2

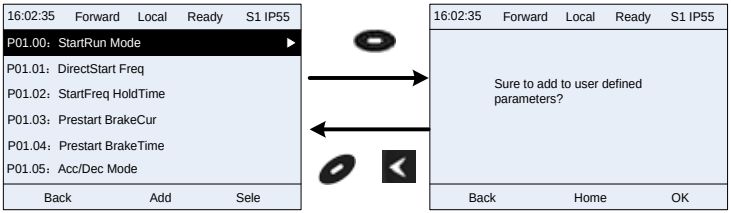

Press key to enter addition interface, and press key, key or Enter key to confirm the addition operation. If this parameter is not included in the original user defined parameter list, the newly-added parameter will be at the end of the list; if this parameter is already in the list, the addition operation will be invalid. If key or key is pressed without any selection, it will return to parameter setup list menu.

All the function code groups under the parameter group menu can be added to the user defined parameter list. Up to 64 function codes can be added to the user defined parameter list.

5.4.5 Editing user defined parameters

After accessing a specific function code under the User defined parameters menu, you can press key, key or Enter key to enter parameter selection edit interface. After entering the edit interface, the present value will be highlighted. Press key and key to edit the present parameter value, and the corresponding parameter item of the value will be highlighted automatically. After parameter selection is done, press key or Enter key to save the selected parameter and return to the previous menu. In parameter selection edit interface, press key to maintain the parameter value and return to the previous menu.

Figure 5-15 Editing user defined parameters

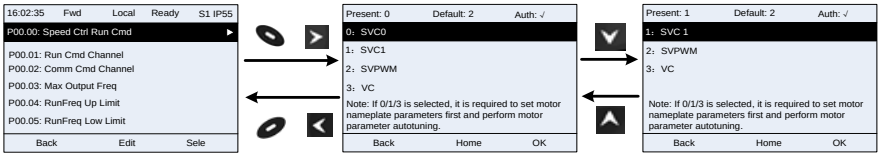

In parameter selection edit interface, the "Auth" on the top right indicates whether this parameter is editable or not.

" √ " indicates the set value of this parameter can be modified under current state.

"×" indicates the set value of this parameter cannot be modified under current state.

"Present" indicates the present value.

"Default" indicates the default value of this parameter.

5.4.6 Editing parameters in parameter groups

You can choose **Menu** > **Parameter groups**, enter a specific function group and then a specific function code, and then press key, key or Enter key to enter the parameter setting interface. After entering the edit interface, set the parameter from the low bit to high bit, and the bit under setting will be highlighted. Press key or key to increase or decrease the parameter value (this operation is valid until the parameter value exceeds the max. value or min. value); press or to shift the edit bit. After the parameter is set, press key or Enter key to save the setting and return to the previous menu. Press to maintain the original parameter value and return to the previous menu.

Figure 5-16 Editing parameters in parameter groups

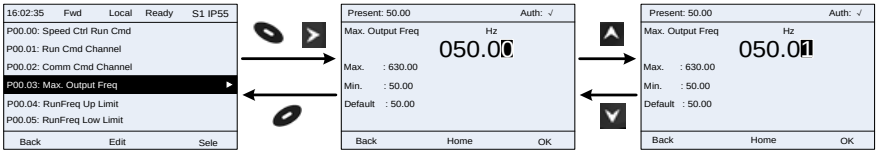

In parameter selection edit interface, the "Auth" on the top right indicates whether this parameter can be modified or not.

" √ " indicates the set value of this parameter can be modified under current state.

"×" indicates the set value of this parameter cannot be modified under current state.

"Present" indicates the present value.

"Default" indicates the default value of this parameter.

5.4.7 Monitoring states

You can choose **Menu** > **State monitoring** > **State monitoring parameter**, enter a specific function group and then a specific function code, and press key, key or Enter key enter the state monitoring interface. After entering the state monitoring interface, the actual parameter value will be displayed in real time, this value is the actually detected value which cannot be modified.

In the state monitoring interface, you can press key or key to return to the previous menu.

Figure 5-17 State monitoring interface

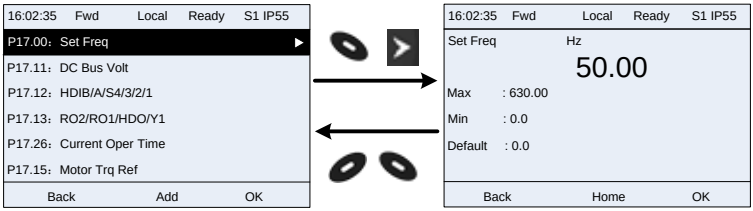

5.4.8 Autotuning motor parameters

You can choose **Menu** > **Motor parameter autotune** and press key, key or key to enter motor parameter autotuning interface. However, before entering the motor parameter autotuning interface, you must set the motor nameplate parameters correctly. After entering the interface, select a motor autotuning type to carry out motor parameter autotuning.

In motor parameter autotuning interface, you can press key or key to return to the previous menu.

Figure 5-18 Selecting a parameter autotuning type

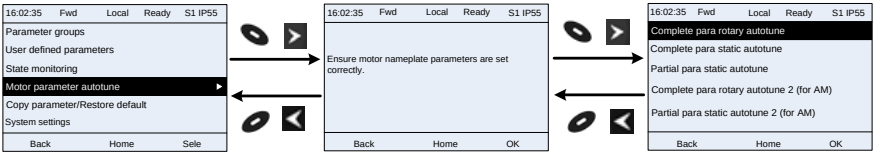

After selecting a motor autotuning type, enter motor parameter autotuning interface, and press RUN key to start motor parameter autotuning. After autotuning is done, a message will pop up indicating autotuning is succeeded, and then it will return to the main interface of stop. During autotuning, you can press STOP/RST key to terminate autotuning; if any fault occur during autotuning, the keypad will display a fault interface.

Figure 5-19 Parameter autotuning

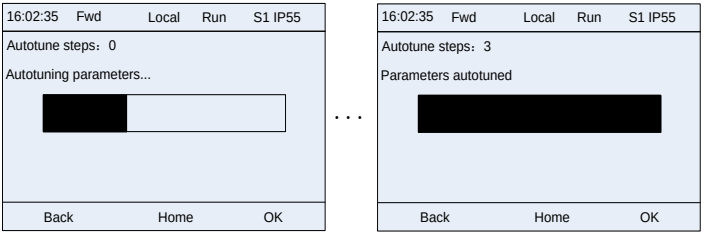

5.4.9 Backing up parameters

You can choose **Menu** > **Copy parameter/Restore default**, and press key, key or

key to enter function parameter backup interface and function parameter restoration interface to upload/download Inverter parameters, or restore Inverter parameters to default values. The keypad has three different storage areas for parameter backup, and each storage area can save the parameters of one Inverter, which means the keypad can save parameters of three Inverters in total.

Figure 5-20 Parameter backup

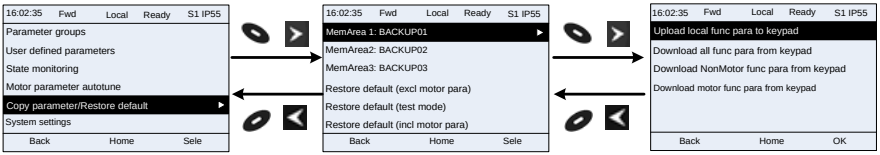

5.4.10 System settings

You can choose **Menu** > **System settings**, and press key, key or key to enter system setting interface to set the keypad language, time/date, backlight brightness, backlight time and restore parameters.

Note: Clock battery is not included, and the keypad time/date needs to be reset after power off. If time-keeping after power off is needed, you should purchase the clock batteries separately.

Figure 5-21 System setup diagram

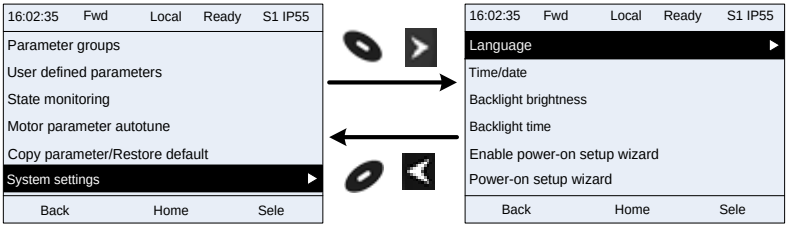

5.4.11 Power-on setup wizard

The keypad supports the power-on setup wizard function, mainly for the first power-on situation, instructing you to enter the setting menu, and gradually implementing basic functions such as basic parameter setting, direction judgment, mode setting and autotuning.

For first power-on, the keypad automatically enters the setup wizard interface. See the following.

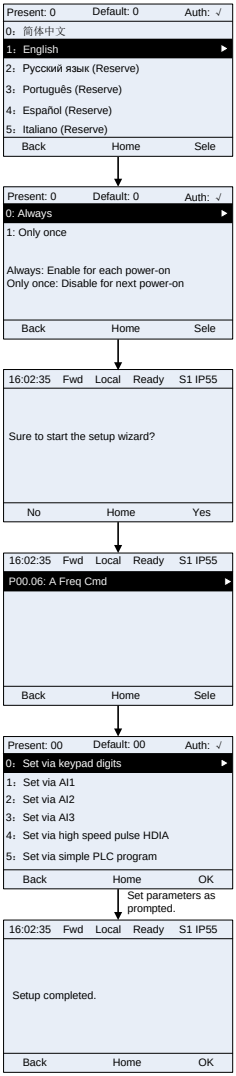

5.5 Basic operation instruction

5.5.1 What this section contains

This section introduces the function modules inside the Inverter

	● Ensure all the terminals are fixed and tightened firmly. ● Ensure the motor matches with the Inverter power.

5.5.2 Common commissioning procedures

The common operation procedures are shown below (take motor 1 as an example).

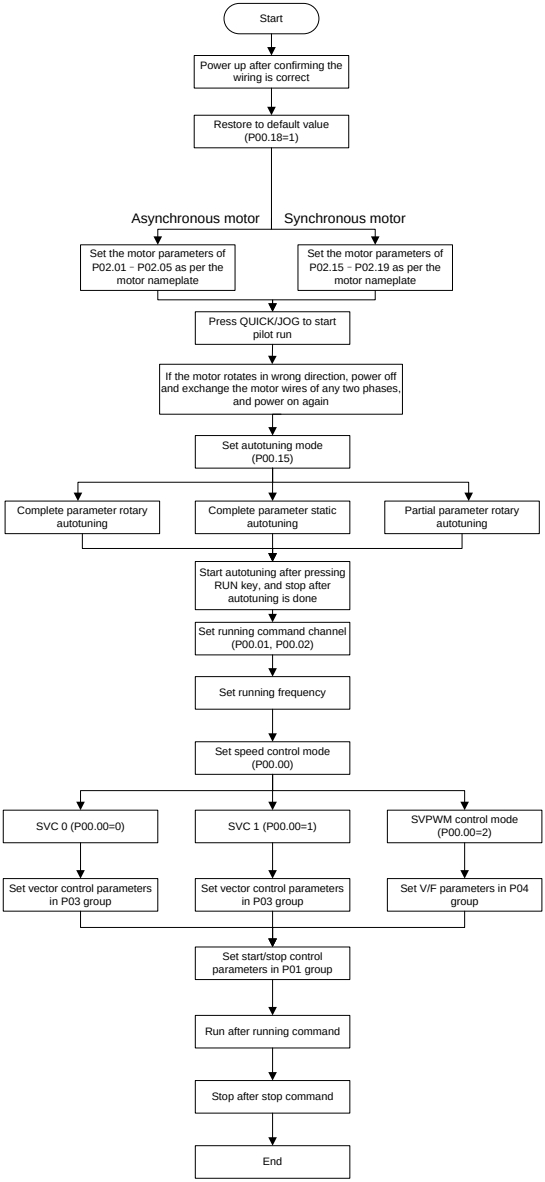

Note: If fault occurred, rule out the fault cause according to "fault tracking".

The running command channel can be set by terminal commands besides P00.01 and P00.02.

Current running command channel P00.01	Multi-function terminal function (36) Command switches to keypad	Multi-function terminal function (37) Command switches to terminal	Multi-function terminal function (38) Command switches to communication
Keypad	/	Terminal	Communication
Terminal	Keypad	/	Communication
Communication	Keypad	Terminal	/

Note: "/" means this multi-function terminal is invalid under current reference channel.

Related parameter list:

Function code	Name	Description	Default value
P00.00	Speed control mode	0: SVC 0 1: SVC 1 2: V/F 3: FVC **Note:** If 0, 1 or 3 is selected, it is required to carry out motor parameter autotuning first.	2
P00.01	Running command channel	0: Keypad 1: Terminal 2: Communication	0
P00.02	Communication running command channel	0: Modbus/Modbus TCP 1: PROFIBUS/CANopen/DeviceNet 2: Ethernet 3: EtherCAT/PROFINET/EtherNet IP 4: Programmable card 5: Bluetooth card 6: Reserved	0
P00.15	Motor parameter autotuning	0: No operation 1: Rotary autotuning 1; carry out comprehensive motor parameter autotuning; rotary autotuning is used in cases where high control precision is required; 2: Static autotuning 1 (comprehensive autotuning); static autotuning 1 is used in cases where the motor cannot be disconnected from load; 3: Static autotuning 2 (partial autotuning) ; when current motor is motor 1, only P02.06, P02.07 and P02.08 will be autotuned; when current motor is motor 2, only P12.06, P12.07 and P12.08 will be autotuned. 4: Rotary autotuning 2, which is similar to rotary autotuning 1 but is only applicable to asynchronous motors. 5: Rotary autotuning 3 (partial autotuning),	0

Function code	Name	Description	Default value
		which is only applicable to asynchronous motors.	
P00.18	Function parameter restoration	0: No operation 1: Restore to default value 2: Clear fault records 3: Reserved 4: Reserved 5: Restore default values (for factory test mode) 6: Restore default values (including motor parameters) **Note:** After the selected function operations are done, this function code will be restored to 0 automatically. Restoration to default value will clear the user password. Exercise in caution. The value 5 can be used only for factory testing.	0
P02.00	Type of motor 1	0: Asynchronous motor 1: Synchronous motor	0
P02.01	Rated power of asynchronous motor 1	0.1–3000.0kW	Depend on model
P02.02	Rated frequency of asynchronous motor 1	0.01Hz–P00.03 (max. output frequency)	50.00Hz
P02.03	Rated speed of asynchronous motor 1	1–60000rpm	Depend on model
P02.04	Rated voltage of asynchronous motor 1	0–1200V	Depend on model
P02.05	Rated current of asynchronous motor 1	0.8–6000.0A	Depend on model
P02.15	Rated power of synchronous motor 1	0.1–3000.0kW	Depend on model
P02.16	Rated frequency of synchronous motor 1	0.01Hz–P00.03 (max. output frequency)	50.00Hz
P02.17	Number of pole pairs of synchronous motor 1	1–50	2
P02.18	Rated voltage of synchronous motor 1	0–1200V	Depend on model
P02.19	Rated current of synchronous motor 1	0.8–6000.0A	Depend on model
P05.01–P05.06	Function of multi-function digital input terminal (S1–S4, HDIA, HDIB)	36: Command switches to keypad 37: Command switches to terminal 38: Command switches to communication	/
P07.01	Reserved	/	/
P07.02	QUICK/JOG key function	Range: 0x00–0x27 Ones: QUICK/JOG key function selection 0: No function 1: Jogging	0x01

Function code	Name	Description	Default value
		2: Reserved 3: Switching between forward/reverse rotation 4: Clear UP/DOWN setting 5: Coast to stop 6: Switch running command reference mode by sequence 7: Reserved Tens: Reserved	

5.5.3 Vector control

Asynchronous motors are featured with high order, non-linear, strong coupling and multi-variables, which makes it very difficult to control asynchronous motors during actual application. The vector control theory aims to solve this problem through measuring and controlling the stator current vector of asynchronous motor, and decomposing the stator current vector into exciting current (current component which generates internal magnet field) and torque current (current component which generates torque) based on field orientation principle, and then controlling the amplitude value and phase position of these two components (namely, control the stator current vector of motor) to realize decoupling control of exciting current and torque current, thus achieving high-performance speed regulation of asynchronous motor.

The S1 IP55 series Inverter carries built-in speed sensor-less vector control algorithm, which can be used to drive the asynchronous motor and permanent-magnet synchronous motor simultaneously. As the core algorithm of vector control is based on accurate motor parameter model, the accuracy of motor parameters will impact the control performance of vector control. It is recommended to input accurate motor parameters and carry out motor parameter autotuning before vector operation.

As vector control algorithm is complicated, users should be cautious of regulation on dedicated function parameters of vector control.

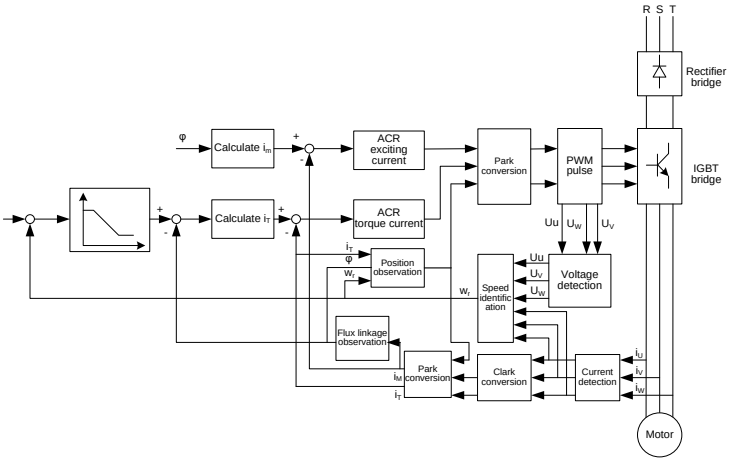

Function code	Name	Description	Default value
P00.00	Speed control mode	0: SVC 0 1: SVC 1 2: V/F 3: FVC **Note:** If 0, 1 or 3 is selected, it is required to carry out motor parameter autotuning first.	2
P00.15	Motor parameter autotuning	0: No operation 1: Rotary autotuning 1; carry out comprehensive motor parameter autotuning; rotary autotuning is used in cases where high control precision is required; 2: Static autotuning 1 (comprehensive autotuning); static autotuning 1 is used in cases where the motor cannot be disconnected from load; 3: Static autotuning 2 (partial autotuning) ; when current motor is motor 1, only P02.06, P02.07 and P02.08 will be autotuned; when current motor is motor 2, only P12.06, P12.07 and P12.08 will be autotuned. 4: Rotary autotuning 2, which is similar to rotary autotuning 1 but is only applicable to asynchronous motors. 5: Rotary autotuning 3 (partial autotuning), which is only applicable to asynchronous motors.	0
P02.00	Type of motor 1	0: Asynchronous motor 1: Synchronous motor	0
P03.00	Speed loop proportional gain 1	0–200.0	20.0
P03.01	Speed loop integral time 1	0.000–10.000s	0.200s
P03.02	Switching low point frequency	0.00Hz–P03.05	5.00Hz
P03.03	Speed loop proportional gain 2	0–200.0	20.0
P03.04	Speed loop integral time 2	0.000–10.000s	0.200s
P03.05	Switching high point frequency	P03.02–P00.03 (max. output frequency)	10.00Hz
P03.06	Speed loop output filter	0–8 (corresponds to 0–2^8/10ms)	0
P03.07	Electromotion slip compensation coefficient of vector control	50%–200%	100%
P03.08	Brake slip compensation coefficient of vector control	50%–200%	100%

Function code	Name	Description	Default value
P03.09	Current loop proportional coefficient P	0–65535	1000
P03.10	Current loop integral coefficient I	0–65535	1000
P03.32	Torque control enable	0:Disable 1:Enable	0
P03.11	Torque setup mode selection	0: Keypad (P03.12) 1: Keypad (P03.12) 2: AI1 3: AI2 4: AI3 5: Pulse frequency HDIA 6: Multi-step torque 7: Modbus/Modbus TCP communication 8: PROFIBUS/CANopen/DeviceNet communication 9: Ethernet communication 10: Pulse frequency HDIB 11: EtherCAT/PROFINET/EtherNet IP communication 12: PLC **Note:** For these settings, 100% corresponds to the motor rated current.	0
P03.12	Torque set by keypad	-300.0%–300.0% (rated motor current)	50.0%
P03.13	Torque reference filter time	0.000–10.000s	0.010s
P03.14	Source of upper limit frequency setup of forward rotation in torque control	0: Keypad (P03.16) 1: AI1 2: AI2 3: AI3 4: Pulse frequency HDIA 5: Multi-step 6: Modbus/Modbus TCP communication7: PROFIBUS/CANopen/DeviceNet communication 8: Ethernet communication 9: Pulse frequency HDIB 10: EtherCAT/PROFINET/EtherNet IP communication 11: PLC 12: Reserved **Note:** For these settings, 100% corresponds to the max. frequency.	0
P03.15	Source of upper limit frequency setup of reverse rotation in torque control	0: Keypad (P03.17) 1–11: the same as P03.14	0

Function code	Name	Description	Default value
P03.16	Keypad limit value of upper limit frequency of forward rotation in torque control	Value range: 0.00 Hz–P00.03 (max. output frequency)	50.00Hz
P03.17	Keypad limit value of upper limit frequency of reverse rotation in torque control		50.00Hz
P03.18	Source of upper limit setup of the torque when motoring	0: Keypad (P03.20) 1: AI1 2: AI2 3: AI3 4: Pulse frequency HDIA 5: Modbus/Modbus TCP communication 6: PROFIBUS/CANopen/DeviceNet communication 7: Ethernet communication 8: Pulse frequency HDIB 9: EtherCAT/PROFINET/EtherNet IP communication 10: PLC 11: Reserved **Note:** For these settings, 100% corresponds to the motor rated current.	0
P03.19	Source of upper limit setup of brake torque	0: Keypad (P03.21) 1–10: the same as P03.18	0
P03.20	Set upper limit of the torque when motoring via keypad	0.0–300.0% (rated motor current)	180.0%
P03.21	Set upper limit of brake torque via keypad		180.0%
P03.22	Flux-weakening coefficient in constant power area	0.1–2.0	0.3
P03.23	Min. flux-weakening point in constant power area	10%–100%	20%
P03.24	Max. voltage limit	0.0–120.0%	100.0%
P03.25	Pre-exciting time	0.000–10.000s	0.300s
P03.32	Torque control enable	0:Disable 1:Enable	0
P03.33	Flux weakening integral gain	0–8000	1200
P03.35	Control optimization setting	0–0x1111 Ones place: Torque command selection 0: Torque reference 1: Torque current reference	0x0000

Function code	Name	Description	Default value
		Tens place: Reserved 0: Reserved 1: Reserved Hundreds place: Whether to enable ASR integral separation 0: Disable 1: Enable Thousands place: Reserved 0: Reserved 1: Reserved	
P03.36	ASR differential gain	0.00–10.00s	0.00s
P03.37	High-frequency ACR proportional coefficient	In the closed-loop vector control mode (P00.00=3), when the frequency is lower than the ACR high-frequency switching threshold (P03.39), the ACR PI parameters are P03.09 and P03.10; and when the frequency is higher than the ACR high-frequency switching threshold (P03.39), the ACR PI parameters are P03.37 and P03.38. Setting range of P03.37: 0–65535 Setting range of P03.38: 0–65535 Setting range of P03.39: 0.0–100.0% (in relative to the maximum frequency)	1000
P03.38	High-frequency ACR integral coefficient		1000
P03.39	ACR high-frequency switching threshold		100.0%
P17.32	Flux linkage	0.0–200.0%	0.0%

5.5.4 V/F control mode

The S1 IP55 series Inverter also carries built-in V/F control function. V/F mode can be used in cases where mediocre control precision is enough. In cases where a Inverter needs to drive multiple motors, it is also recommended to adopt V/F control mode.

The S1 IP55 series Inverter provides multiple kinds of V/F curve modes to meet different field needs. Users can select corresponding V/F curve or set the V/F curve as needed.

Suggestions:

1. For the load featuring constant moment, eg, conveyor belt which runs in straight line, as the moment should be constant during the whole running process, it is recommended to adopt straight-type V/F curve.
2. For the load featuring decreasing moment, eg, fan and water pump, as the relation between its actual torque and speed is squared or cubed, it is recommended to adopt the V/F curve corresponds to power 1.3, 1.7 or 2.0.

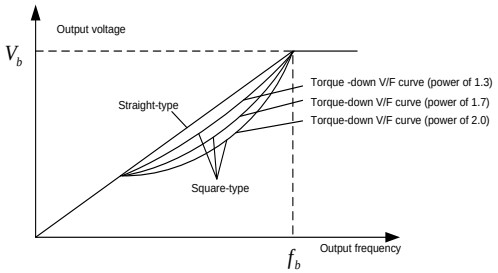

The S1 IP55 series Inverter also provides multi-point V/F curve. Users can alter the V/F curve outputted by Inverter through setting the voltage and frequency of the three points in the middle. The whole curve consists of five points starting from (0Hz, 0V) and ending in (fundamental motor frequency, rated motor voltage). During setup, it is required that 0≤f1≤f2≤f3≤fundamental motor frequency, and 0≤V1≤V2≤V3≤rated motor voltage.

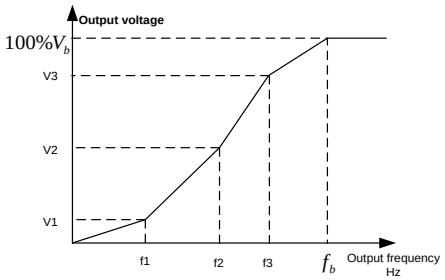

The S1 IP55 series Inverter provides dedicated function codes for V/F control mode. Users can improve the performance of V/F through settings.

1. Torque boost

Torque boost function can effectively compensate for the low-speed torque performance during V/F control. Automatic torque boost has been set by default to enable the Inverter to adjust the torque boost value based on actual load conditions.

Note:

(1) Torque boost is effective only under torque boost cut-off frequency;

(2) If the torque boost is too large, low-frequency vibration or overcurrent may occur to the motor, if such situation occurs, lower the torque boost value.

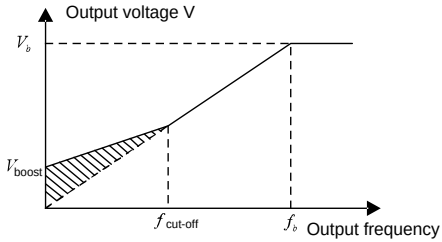

2. Energy-saving run

During actual running, the Inverter can search for the max. efficiency point to keep running in the most efficient state to save energy.

Note:

(1) This function is generally used in light load or no-load cases.

(2) This function does for fit in cases where load transient is required.

3. V/F slip compensation gain

V/F control belongs to open-loop mode, which will cause motor speed to fluctuate when motor load transients. In cases where strict speed requirement is needed, users can set the slip compensation gain to compensate for the speed variation caused by load fluctuation through internal output adjustment of Inverter.

The set range of slip compensation gain is 0–200%, in which 100% corresponds to rated slip frequency.

Note: Rated slip frequency= (rated synchronous speed of motor-rated speed of motor) × number of motor pole pairs/60

4. Oscillation control

Motor oscillation often occurs in V/F control in large-power drive applications. To solve this problem, the S1 IP55 series Inverter sets two function codes to control the oscillation factor, and users can set the corresponding function code based on the occurrence frequency of oscillation.

Note: The larger the set value, the better the control effect, however, if the set value is too large, it may easily lead to too large Inverter output current.

Customized V/F curve (V/F separation) function:

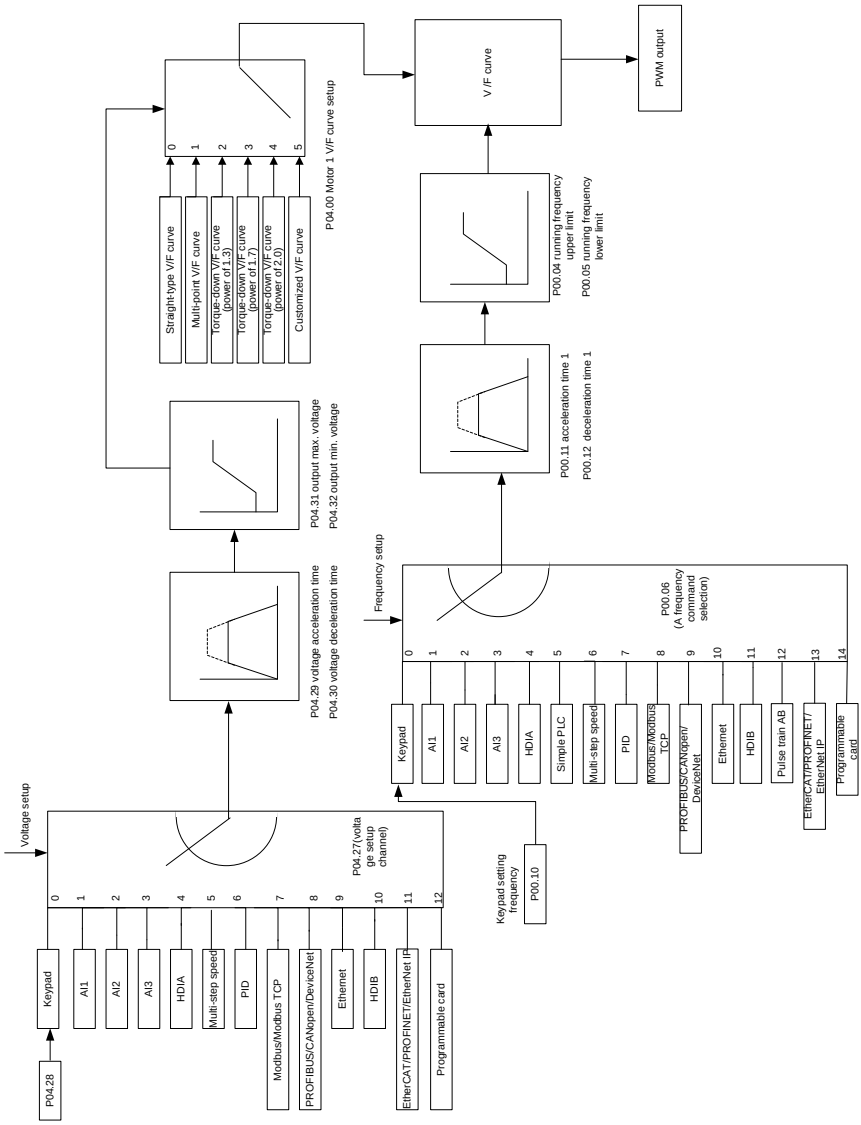

When selecting customized V/F curve function, users can set the reference channels and acceleration/deceleration time of voltage and frequency respectively, which will form a real-time V/F curve through combination.

Note: This kind of V/F curve separation can be applied in various frequency-conversion power sources, however, users should be cautious of parameter setup as improper setup may damage the machine.

Function code	Name	Description	Default value
P00.00	Speed control mode	0: SVC 0 1: SVC 1 2: V/F 3: FVC **Note:** If 0, 1 or 3 is selected, it is required to carry out motor parameter autotuning first.	2
P00.03	Max. output frequency	P00.04–590.00Hz	50.00Hz
P00.04	Upper limit of running frequency	P00.05–P00.03	50.00Hz
P00.05	Lower limit of running frequency	0.00Hz–P00.04	0.00Hz
P00.11	Acceleration time 1	0.0–3600.0s	Depend on model
P00.12	Deceleration time 1	0.0–3600.0s	Depend on model
P02.00	Type of motor 1	0: Asynchronous motor 1: Synchronous motor	0
P02.02	Rated power of asynchronous motor 1	0.01Hz–P00.03 (max. output frequency)	50.00Hz
P02.04	Rated voltage of asynchronous motor 1	0–1200V	Depend on model
P04.00	V/F curve setting of motor 1	0: Straight-type V/F curve 1: Multi-point V/F curve 2: Torque-down V/F curve (power of 1.3) 3: Torque-down V/F curve (power of 1.7) 4: Torque-down V/F curve (power of 2.0) 5: Customized V/F (V/F separation)	0
P04.01	Torque boost of motor 1	0.0%: (automatic) 0.1%–10.0%	0.0%
P04.02	Motor 1 torque boost cut-off	0.0%–50.0% (rated frequency of motor 1)	20.0%
P04.03	V/F frequency point 1 of motor 1	0.00Hz–P04.05	0.00Hz
P04.04	V/F voltage point 1 of motor 1	0.0%–110.0%	0.0%
P04.05	V/F frequency point 2 of motor 1	P04.03– P04.07	0.00Hz
P04.06	V/F voltage point 2 of motor 1	0.0%–110.0%	0.0%
P04.07	V/F frequency point 3 of motor 1	P04.05– P02.02 or P04.05– P02.16	0.00Hz

Function code	Name	Description	Default value
P04.08	V/F voltage point 3 of motor 1	0.0%–110.0%	0.0%
P04.09	V/F slip compensation gain of motor 1	0.0–200.0%	100.0%
P04.10	Low-frequency oscillation control factor of motor 1	0–100	10
P04.11	High-frequency oscillation control factor of motor 1	0–100	10
P04.12	Oscillation control threshold of motor 1	0.00Hz–P00.03 (max. output frequency)	30.00Hz
P04.13	V/F curve setup of motor 2	0: Straight V/F curve; 1: Multi-point V/F curve 2: Torque-down V/F curve (power of 1.3) 3: Torque-down V/F curve (power of 1.7) 4: Torque-down V/F curve (power of 2.0) 5: Customize V/F (V/F separation)	0
P04.14	Torque boost of motor 2	0.0%: (automatic) 0.1%–10.0%	0.0%
P04.15	Motor 2 torque boost cut-off	0.0%–50.0% (rated frequency of motor 1)	20.0%
P04.16	V/F frequency point 1 of motor 2	0.00Hz–P04.18	0.00Hz
P04.17	V/F voltage point 1 of motor 2	0.0%–110.0%	0.0%
P04.18	V/F frequency point 2 of motor 2	P04.16– P04.20	0.00Hz
P04.19	V/F voltage point 2 of motor 2	0.0%–110.0%	0.0%
P04.20	V/F frequency point 3 of motor 2	P04.18– P02.02 or P04.18– P02.16	0.00Hz
P04.21	V/F voltage point 3 of motor 2	0.0%–110.0%	0.0%
P04.22	V/F slip compensation gain of motor 2	0.0–200.0%	100.0%
P04.23	Low-frequency oscillation control factor of motor 2	0–100	10
P04.24	High-frequency oscillation control factor of motor 2	0–100	10
P04.25	Oscillation control threshold of motor 2	0.00Hz–P00.03 (max. output frequency)	30.00Hz
P04.26	Energy-saving run	0: No 1: Automatic energy-saving run	0

Function code	Name	Description	Default value
P04.27	Channel of voltage setup	0: Keypad; output voltage is determined by P04.28 1: AI1 2: AI2 3: AI3 4: HDIA 5: Multi-step 6: PID 7: Modbus/Modbus TCP communication 8: PROFIBUS/CANopen communication 9: Ethernet communication 10: HDIB 11: EtherCAT/PROFINET/EtherNet IP communication 12: PLC card 13: Reserved	0
P04.28	Set voltage value via keypad	0.0%–100.0% (rated motor voltage)	100.0%
P04.29	Voltage acceleration time	0.0–3600.0s	5.0s
P04.30	Voltage deceleration time	0.0–3600.0s	5.0s
P04.31	Max. output voltage	P04.32–100.0% (rated motor voltage)	100.0%
P04.32	Min. output voltage	0.0%–P04.31 (rated motor voltage)	0.0%
P04.33	Flux-weakening coefficient in the constant power zone	1.00–1.30	1.00
P04.34	Injection current 1 in synchronous motor VF control	When the synchronous motor VF control mode is enabled, this parameter is used to set the reactive current of the motor when the output frequency is lower than the frequency set in P04.36. Setting range: -100.0%–+100.0% (of the motor rated current)	20.0%
P04.35	Injection current 2 in synchronous motor VF control	When the synchronous motor VF control mode is enabled, this parameter is used to set the reactive current of the motor when the output frequency is higher than the frequency set in P04.36. Setting range: -100.0%–+100.0% (of the motor rated current)	10.0%
P04.36	Frequency threshold for injection current switching in synchronous motor VF control	When the synchronous motor VF control mode is enabled, this parameter is used to set the frequency threshold for the switching between input current 1 and	20.0%

Function code	Name	Description	Default value
		injection current 2. Setting range: 0.0%–200.0% (of the motor rated frequency)	
P04.37	Reactive current closed-loop proportional coefficient in synchronous motor VF control	When the synchronous motor VF control mode is enabled, this parameter is used to set the proportional coefficient of the reactive current closed-loop control. Setting range: 0–3000	50
P04.38	Reactive current closed-loop integral time in synchronous motor VF control	When the synchronous motor VF control mode is enabled, this parameter is used to set the integral coefficient of the reactive current closed-loop control. Setting range: 0–3000	30
P04.39	Reactive current closed-loop output limit in synchronous motor VF control	When the synchronous motor VF control mode is enabled, this parameter is used to set the output limit of the reactive current closed-loop control. A greater value indicates a higher reactive closed-loop compensation voltage and higher output power of the motor. In general, you do not need to modify this parameter. Setting range: 0–16000	8000
P04.40	Enable/disable IF mode for asynchronous motor 1	0: Disabled 1: Enabled	0
P04.41	Current setting in IF mode for asynchronous motor 1	When IF control is adopted for asynchronous motor 1, this parameter is used to set the output current. The value is a percentage in relative to the rated current of the motor. Setting range: 0.0–200.0%	120.0%
P04.42	Proportional coefficient in IF mode for asynchronous motor 1	When IF control is adopted for asynchronous motor 1, this parameter is used to set the proportional coefficient of the output current closed-loop control. Setting range: 0–5000	350
P04.43	Integral coefficient in IF mode for asynchronous motor 1	When IF control is adopted for asynchronous motor 1, this parameter is used to set the integral coefficient of the output current closed-loop control. Setting range: 0–5000	150

Function code	Name	Description	Default value
P04.44	Starting frequency point for switching off IF mode for asynchronous motor 1	0.00–P04.50	10.00Hz
P04.45	Enable/disable IF mode for asynchronous motor 2	0: Disable 1: Enable	0
P04.46	Current setting in IF mode for asynchronous motor 2	When IF control is adopted for asynchronous motor 2, this parameter is used to set the output current. The value is a percentage in relative to the rated current of the motor. Setting range: 0.0–200.0%	120.0%
P04.47	Proportional coefficient in IF mode for asynchronous motor 2	When IF control is adopted for asynchronous motor 2, this parameter is used to set the proportional coefficient of the output current closed-loop control. Setting range: 0–5000	350
P04.48	Integral coefficient in IF mode for asynchronous motor 2	When IF control is adopted for asynchronous motor 2, this parameter is used to set the integral coefficient of the output current closed-loop control. Setting range: 0–5000	150
P04.49	Starting frequency point for switching off IF mode for asynchronous motor 2	0.00–P04.51	10.00Hz
P04.50	End frequency point for switching off IF mode for asynchronous motor 1	P04.44–P00.03	25.00Hz
P04.51	End frequency point for switching off IF mode for asynchronous motor 2	P04.49–P00.03	25.00Hz

5.5.5 Torque control

The Inverter supports torque control and speed control. Speed control mode aims to stabilize the speed to keep the set speed consistent with the actual running speed, meanwhile, the max. load-carrying capacity is restricted by torque limit. Torque control mode aims to stabilize the torque to keep the set torque consistent with the actual output torque. Meanwhile, the output frequency is restricted by upper/lower limit.

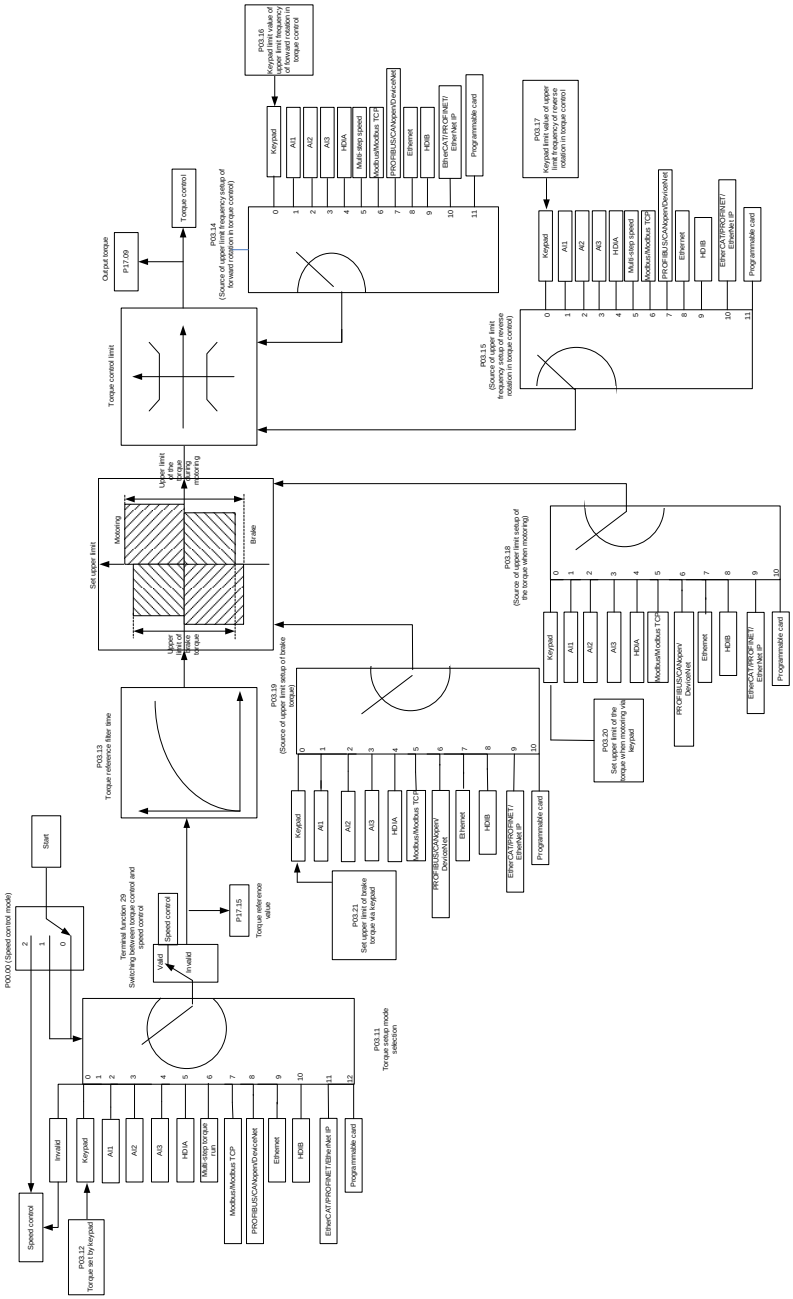
P00.00 (Speed control mode)
Start
Speed control
P03.12
Torque set by keypad
Invalid
Keypad
AI1
AI2
AI3
HDIA
Multi-step torque cun
Modbus/Modbus TCP
PROFIBUS/CANopen/DeviceNet
Ethernet
HDIB
EtherCAT/PROFINET/Ethernet IP
Programmable card
P03.11
Torque setup mode selection
Terminal function 29
Switching between torque control and speed control
Valid
Invalid
Speed control
P17.15
Torque reference value
P03.13
Torque reference filter time
Set upper limit
Motoring
Brake
Upper limit of brake torque
Upper limit of motoring torque
P03.19
(Source of upper limit setup of brake torque)
P03.21
Set upper limit of brake torque via keypad
P03.18
(Source of upper limit setup of the torque when motoring)
P03.20
Set upper limit of the torque when motoring via keypad
Torque control limit
Output torque
P17.09
Torque control
P03.14
(Source of upper limit frequency setup of forward rotation in torque control)
P03.16
Keypad limit value of upper limit frequency of forward rotation in torque control
P03.15
(Source of upper limit frequency setup of reverse rotation in torque control)
P03.17
Keypad limit value of upper limit frequency of reverse rotation in torque control

Function code	Name	Description	Default value
P00.00	Speed control mode	0: SVC 0 1: SVC 1 2: V/F 3: FVC **Note:** If 0, 1 or 3 is selected, it is required to carry out motor parameter autotuning first.	2
P03.32	Torque control enable	0: Disable 1: Enable	0
P03.11	Torque setup mode selection	0: Keypad (P03.12) 1: Keypad (P03.12) 2: AI1 3: AI2 4: AI3 5: Pulse frequency HDIA 6: Multi-step torque 7: Modbus/Modbus TCP communication 8: PROFIBUS/CANopen/DeviceNet communication 9: Ethernet communication 10: Pulse frequency HDIB 11: EtherCAT/PROFINET/EtherNet IP communication 12: PLC **Note:** For these settings, 100% corresponds to the motor rated current.	0
P03.12	Torque set by keypad	-300.0%–300.0% (rated motor current)	50.0%
P03.13	Torque reference filter time	0.000–10.000s	0.010s
P03.14	Source of upper limit frequency setup of forward rotation in torque control	0: Keypad (P03.16) 1: AI1 2: AI2 3: AI3 4: Pulse frequency HDIA 5: Multi-step 6: Modbus/Modbus TCP communication 7: PROFIBUS/CANopen/DeviceNet communication 8: Ethernet communication 9: Pulse frequency HDIB 10: EtherCAT/PROFINET/EtherNet IP communication 11: PLC 12: Reserved **Note:** For these settings, 100% corresponds	0

Function code	Name	Description	Default value
		to the max. frequency.	
P03.15	Source of upper limit frequency setup of reverse rotation in torque control	0: Keypad (P03.17) 1–11: the same as P03.14	0
P03.16	Keypad limit value of upper limit frequency of forward rotation in torque control	0.00Hz–P00.03 (max. output frequency)	50.00 Hz
P03.17	Keypad limit value of upper limit frequency of reverse rotation in torque control	0.00Hz–P00.03 (max. output frequency)	50.00 Hz
P03.18	Source of upper limit setup of the torque during motoring	0: Keypad (P03.20) 1: AI1 2: AI2 3: AI3 4: Pulse frequency HDIA 5: Modbus/Modbus TCP communication 6: PROFIBUS/CANopen/DeviceNet communication 7: Ethernet communication 8: Pulse frequency HDIB 9: EtherCAT/PROFINET/EtherNet IP communication 10: PLC 11: Reserved **Note:** For these settings, 100% corresponds to the motor rated current.	0
P03.19	Source of upper limit setup of brake torque	0: Keypad (P03.21) 1–10: the same as P03.18	0
P03.20	Set upper limit of the torque when motoring via keypad	0.0–300.0% (rated motor current)	180.0%
P03.21	Set upper limit of brake torque via keypad	0.0–300.0% (rated motor current)	180.0%
P17.09	Motor output torque	-250.0–250.0%	0.0%
P17.15	Torque reference value	-300.0–300.0% (rated motor current)	0.0%

5.5.6 Motor parameter

	● Check the safety conditions surrounding the motor and load machineries before autotuning as physical injury may occur due to sudden start of motor during autotuning. ● Although the motor does not run during static autotuning, the motor is stilled supplied with power, do not touch the motor during autotuning; otherwise, electric shock may occur.
	● If the motor has been connected to load, do not carry out rotary autotuning; otherwise, misact or damage may occur to the Inverter. If rotary autotuning is carried out on a motor which has been connected to load, wrong motor parameters and motor misacts may occur. Disconnect the load to carry out autotuning if necessary.

The S1 IP55 series Inverter can drive asynchronous motors and synchronous motors, and it supports two sets of motor parameters, which can be switched over by multi-function digital input terminals or communication modes.

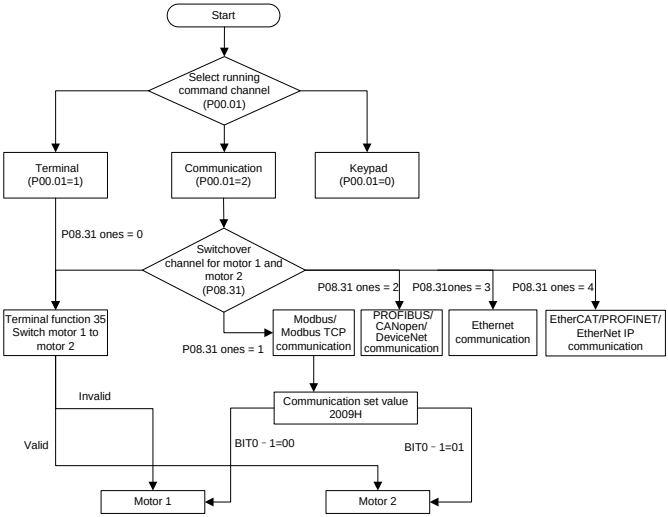

The control performance of the Inverter is based on accurate motor model, therefore, users need to carry out motor parameter autotuning before running the motor for the first time (take motor 1 as an example)

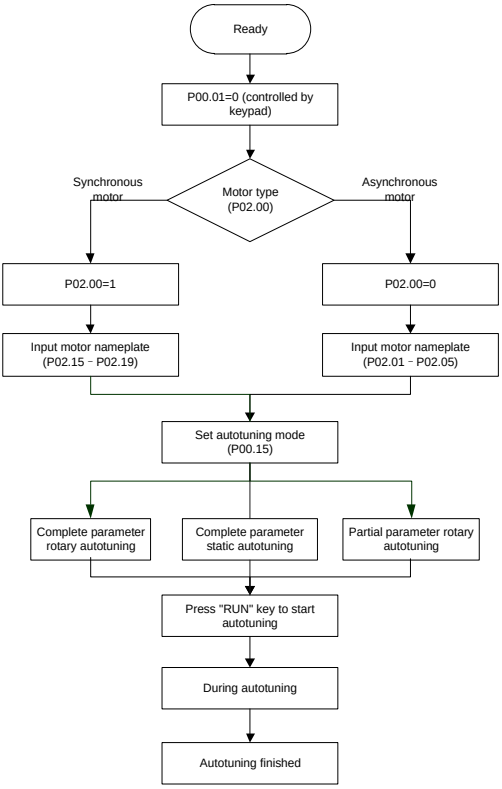

Note:

1. Motor parameters must be set correctly according to motor nameplate;
2. If rotary autotuning is selected during motor autotuning, it is a must to disconnect the motor from load to put the motor in static and no-load state, failed to do so may lead to inaccurate autotuned results. At this time, the asynchronous motor can autotune P02.06–P02.10, and synchronous motor can autotune P02.20–P02.23
3. If static autotuning is selected during motor autotuning, there is no need to disconnect the motor from load, as only part of the motor parameters have been autotuned, the control performance may be impacted, under such situation, the asynchronous motor can autotune P02.06–P02.10, while synchronous motor can autotune P02.20–P02.22, P02.23 (counter-emf constant of synchronous motor 1) can be obtained via calculation.
4. Motor autotuning can be carried out on current motor only, if users need to perform autotuning on the other motor, switch over the motor through selecting the switch-over channel of motor 1 and motor 2 by setting the ones of P08.31.

Related parameter list:

Function code	Name	Description	Default value
P00.01	Running command channel	0: Keypad 1: Terminal 2: Communication	0
P00.15	Motor parameter autotuning	0: No operation 1: Rotary autotuning 1; carry out comprehensive motor parameter autotuning; rotary autotuning is used in cases where high control precision is required; 2: Static autotuning 1 (comprehensive autotuning); static autotuning 1 is used in cases where the motor cannot be disconnected from load; 3: Static autotuning 2 (partial autotuning) ; when current motor is motor 1, only P02.06, P02.07 and P02.08 will be autotuned; when current motor is motor 2, only P12.06, P12.07 and P12.08 will be autotuned. 4: Rotary autotuning 2, which is similar to rotary autotuning 1 but is only applicable to asynchronous motors. 5: Rotary autotuning 3 (partial autotuning), which is only applicable to asynchronous motors.	0
P02.00	Type of motor 1	0: Asynchronous motor 1: Synchronous motor	0
P02.01	Rated power of asynchronous motor 1	0.1–3000.0kW	Depend on model
P02.02	Rated frequency of asynchronous motor 1	0.01Hz–P00.03 (max. output frequency)	50.00Hz
P02.03	Rated speed of asynchronous motor 1	1–60000rpm	Depend on model
P02.04	Rated voltage of asynchronous motor 1	0–1200V	Depend on model
P02.05	Rated current of asynchronous motor 1	0.8–6000.0A	Depend on model
P02.06	Stator resistance of asynchronous motor 1	0.001–65.535Ω	Depend on model
P02.07	Rotor resistance of asynchronous motor 1	0.001–65.535Ω	Depend on model
P02.08	Leakage inductance of asynchronous motor 1	0.1–6553.5mH	Depend on model
P02.09	Mutual inductance of asynchronous motor 1	0.1–6553.5mH	Depend on model

Function code	Name	Description	Default value
P02.10	No-load current of asynchronous motor 1	0.1–6553.5A	Depend on model
P02.15	Rated power of synchronous motor 1	0.1–3000.0kW	Depend on model
P02.16	Rated frequency of synchronous motor 1	0.01Hz–P00.03 (max. output frequency)	50.00Hz
P02.17	Number of pole pairs of synchronous motor 1	1–50	2
P02.18	Rated voltage of synchronous motor 1	0–1200V	Depend on model
P02.19	Rated current of synchronous motor 1	0.8–6000.0A	Depend on model
P02.20	Stator resistance of synchronous motor 1	0.001–65.535Ω	Depend on model
P02.21	Direct-axis inductance of synchronous motor 1	0.01–655.35mH	Depend on model
P02.22	Quadrature-axis inductance of synchronous motor 1	0.01–655.35mH	Depend on model
P02.23	Counter-emf constant of synchronous motor 1	0–10000	300
P05.01–P05.06	Function of multi-function digital input terminal (S1–S4, HDIA, HDIB)	35: Motor 1 switches to motor 2	/
P08.31	Switching between motor 1 and motor 2	0x00–0x14 Ones: Switch-over channel 0: Switch over by terminal 1: Switch over by Modbus/Modbus TCP communication 2: Switch over by PROFIBUS/CANopen/DeviceNet 3: Switch over by Ethernet communication 4: Switch over by EtherCAT/PROFINET/EtherNet IP communication Tens: Motor switch-over during running 0: Disable switch-over during running 1: Enable switch-over during running	00
P12.00	Type of motor 2	0: Asynchronous motor 1: Synchronous motor	0
P12.01	Rated power of asynchronous motor 2	0.1–3000.0kW	Depend on model
P12.02	Rated frequency of asynchronous motor 2	0.01Hz–P00.03 (max. output frequency)	50.00Hz
P12.03	Rated speed of asynchronous motor 2	1–36000rpm	Depend on model

Function code	Name	Description	Default value
P12.04	Rated voltage of asynchronous motor 2	0–1200V	
P12.05	Rated current of asynchronous motor 2	0.8–6000.0A	
P12.06	Stator resistance of asynchronous motor 2	0.001–65.535Ω	
P12.07	Rotor resistance of asynchronous motor 2	0.001–65.535Ω	
P12.08	Leakage inductance of asynchronous motor 2	0.1–6553.5mH	
P12.09	Mutual inductance of asynchronous motor 2	0.1–6553.5mH	
P12.10	No-load current of asynchronous motor 2	0.1–6553.5A	
P12.15	Rated power of synchronous motor 2	0.1–3000.0kW	
P12.16	Rated frequency of synchronous motor 2	0.01Hz–P00.03 (max. output frequency)	50.00Hz
P12.17	Number of pole pairs of synchronous motor 2	1–50	2
P12.18	Rated voltage of synchronous motor 2	0–1200V	Depend on model
P12.19	Rated current of synchronous motor 2	0.8–6000.0A	Depend on model
P12.20	Stator resistance of synchronous motor 2	0.001–65.535Ω	Depend on model
P12.21	Direct-axis inductance of synchronous motor 2	0.01–655.35mH	Depend on model
P12.22	Quadrature-axis inductance of synchronous motor 2	0.01–655.35mH	Depend on model
P12.23	Counter-emf constant of synchronous motor 2	0–10000	300

5.5.7 Start/stop control

The start/stop control of the Inverter is divided into three states: start after running command at power-up; start after restart-at-power-cut function is effective; start after automatic fault reset. Descriptions for these three start/stop control states are presented below.

There are three start modes for the Inverter, which are start at starting frequency, start after DC brake, and start after speed-tracking. Users can select the proper start mode based on field conditions.

For large-inertia load, especially in cases where reversal may occur, users can choose to start after DC brake or start after speed-racking.

Note: It is recommended to drive synchronous motors in direct start mode.

1. Logic diagram for running command after power-up

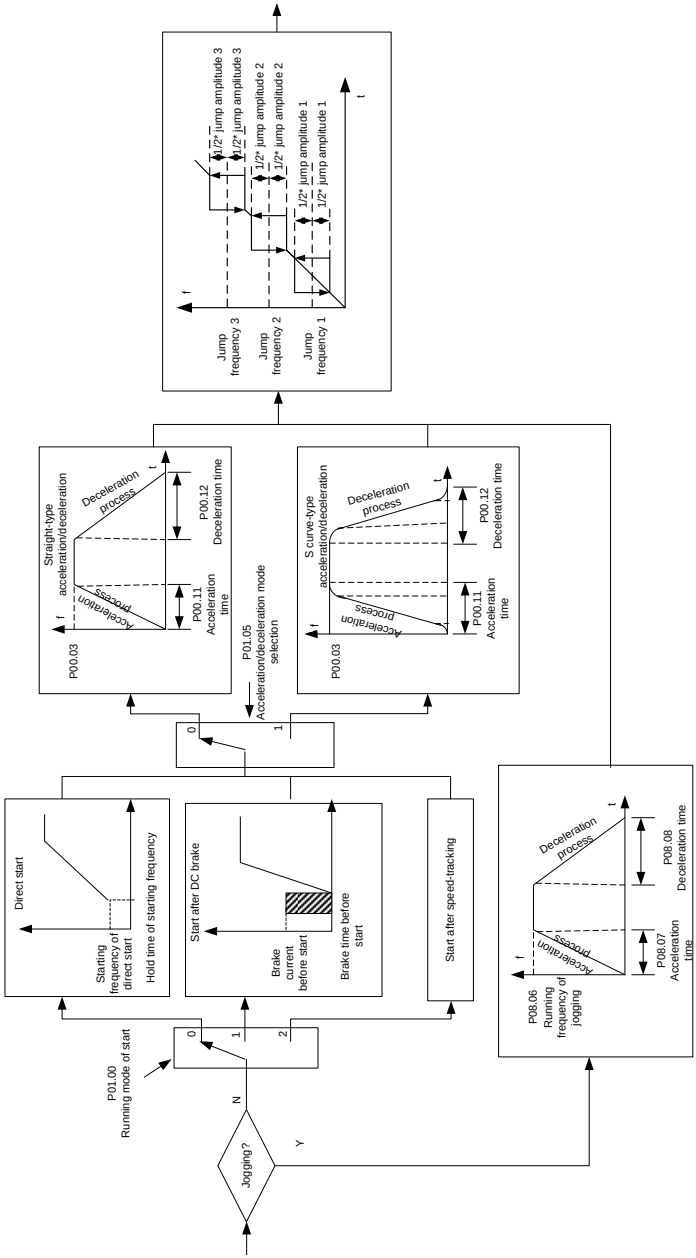

2. Logic diagram for restart after power-cut

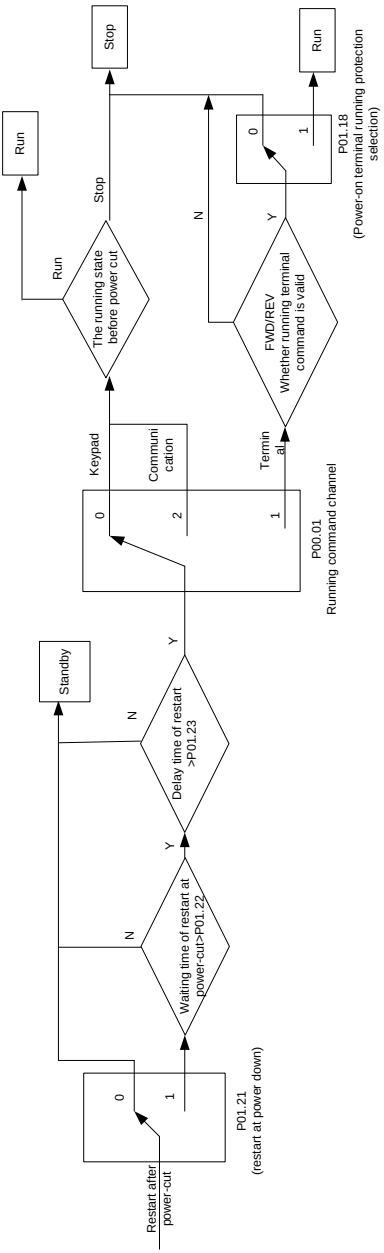

3. Logic diagram for restart after automatic fault reset

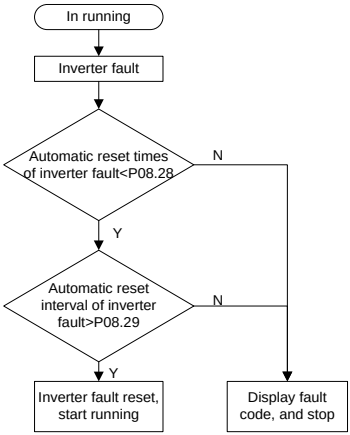

Related parameter list:

Function code	Name	Description	Default value
P00.01	Running command channel	0: Keypad 1: Terminal 2: Communication	0
P00.11	Acceleration time 1	0.0–3600.0s	Depend on model
P00.12	Deceleration time 1	0.0–3600.0s	Depend on model
P01.00	Running mode of start	0: Direct start 1: Start after DC brake 2: Start after speed-track	0
P01.01	Starting frequency of direct start	0.00–50.00Hz	0.50Hz
P01.02	Hold time of starting frequency	0.0–50.0s	0.0s
P01.03	DC brake current before start	0.0–100.0%	0.0%
P01.04	DC brake time before start	0.00–50.00s	0.00s
P01.05	Acceleration/deceleration mode	0: Straight line 1: S curve **Note:** If mode 1 is selected, it is required to set P01.07, P01.27 and P01.08 accordingly	0
P01.08	Stop mode	0: Decelerate to stop 1: Coast to stop	0
P01.09	Starting frequency of DC brake after stop	0.00Hz–P00.03 (max. output frequency)	0.00Hz

Function code	Name	Description	Default value
P01.10	Waiting time of DC brake after stop	0.00–50.00s	0.00s
P01.11	DC brake current of stop	0.0–100.0%	0.0%
P01.12	DC brake time of stop	0.00–50.00s	0.00s
P01.13	Deadzone time of forward/reverse rotation	0.0–3600.0s	0.0s
P01.14	Forward/reverse rotation switch-over mode	0: switch over after zero frequency 1: switch over after starting frequency 2: switch over after passing stop speed and delay	1
P01.15	Stop speed	0.00–100.00Hz	0.50 Hz
P01.16	Stop speed detection mode	0: Set value of speed (the only detection mode valid in V/F mode) 1: Detection value of speed	1
P01.18	Power-on terminal running protection selection	0: Terminal running command is invalid at power up 1: Terminal running command is valid at power up	0
P01.19	Action selection when the running frequency is below lower limit (lower limit should be larger than 0)	Setting range: 0x00–0x12 Ones place: Action selection 0: Run at the lower limit frequency 1: Stop 2: Sleep Tens place: Stop mode 0: Coast to stop 1: Decelerate to stop	0x00
P01.20	Wake-up-from-sleep delay	0.0–3600.0s (valid when the ones place of P01.19 is 2)	0.0s
P01.21	Restart after power down	0: Restart is disabled 1: Restart is enabled	0
P01.22	Waiting time of restart after power cut	0.0–3600.0s (valid when P01.21 is 1)	1.0s
P01.23	Start delay	0.0–60.0s	0.0s
P01.24	Stop speed delay	0.0–100.0s	0.0s
P01.25	Open-loop 0Hz output selection	0: No voltage output 1: With voltage output 2: Output as per DC brake current of stop	0
P01.26	Deceleration time of emergency-stop	0.0–60.0s	2.0s
P01.27	Time of starting section of deceleration S curve	0.0–50.0s	0.1s

Function code	Name	Description	Default value
P01.28	Time of ending section of deceleration S curve	0.0–50.0s	0.1s
P01.29	Short-circuit brake current	0.0–150.0% (of the rated Inverter output current)	0.0%
P01.30	Hold time of short-circuit brake at startup	0.00–50.00s	0.00s
P01.31	Hold time of short-circuit brake at stop	0.00–50.00s	0.00s
P01.32	Pre-exciting time of jogging	0–10.000s	0.300s
P01.33	Starting frequency of braking for jogging to stop	0–P00.03	0.00Hz
P01.34	Delay to enter sleep	0–3600.0s	0.0s
P05.01–P05.06	Digital input function selection	1: Forward running 2: Reverse running 4: Forward jogging 5: Reverse jogging 6: Coast to stop 7: Fault reset 8: Running pause 21: Acceleration/deceleration time selection 1 22: Acceleration/deceleration time selection 2 30: Acceleration/deceleration disabled	/
P08.06	Running frequency of jog	0.00Hz–P00.03 (max. output frequency)	5.00Hz
P08.07	Acceleration time at jogging	0.0–3600.0s	Depend on model
P08.08	Deceleration time at jogging	0.0–3600.0s	Depend on model
P08.00	Acceleration time 2	0.0–3600.0s	Depend on model
P08.01	Declaration time 2	0.0–3600.0s	Depend on model
P08.02	Acceleration time 3	0.0–3600.0s	Depend on model
P08.03	Declaration time 3	0.0–3600.0s	Depend on model
P08.04	Acceleration time 4	0.0–3600.0s	Depend on model
P08.05	Declaration time 4	0.0–3600.0s	Depend on model

Function code	Name	Description	Default value
P08.19	Switching frequency of acceleration/deceleration time	0.00–P00.03 (max. output frequency) 0.00Hz: No switch over If the running frequency is larger than P08.19, switch to acceleration /deceleration time 2	0
P08.21	Reference frequency of acceleration/deceleration time	0: Max. output frequency 1: Set frequency 2: 100Hz **Note:** Valid for straight-line acceleration/deceleration only	0
P08.28	Automatic fault reset times	0–10	0
P08.29	Automatic fault reset time interval	0.1–3600.0s	1.0s

5.5.8 Frequency setup

The S1 IP55 series Inverter supports multiple kinds of frequency reference modes, which can be categorized into two types: main reference channel and auxiliary reference channel.

There are two main reference channels, namely frequency reference channel A and frequency reference channel B. These two channels support simple arithmetical operation between each other, and they can be switched dynamically by setting multi-function terminals.

There is one input mode for auxiliary reference channel, namely terminal UP/DOWN switch input. By setting function codes, users can enable the corresponding reference mode and the impact made on the Inverter frequency reference by this reference mode.

The actual reference of Inverter is comprised of the main reference channel and auxiliary reference channel.

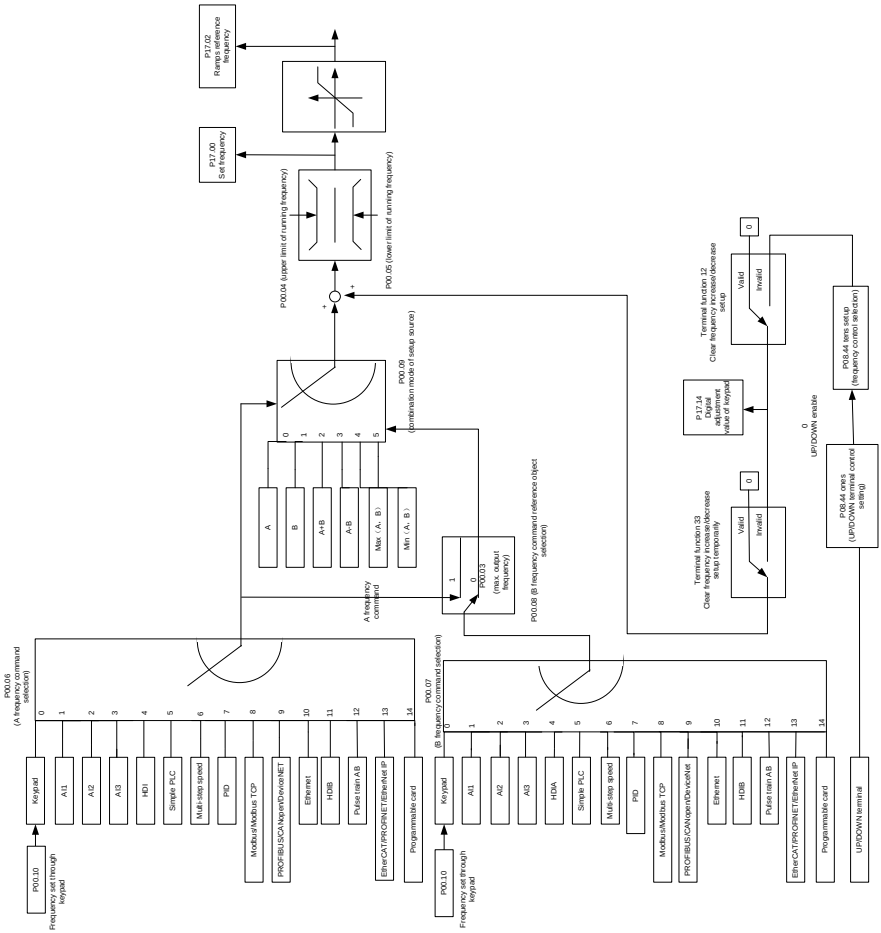

The S1 IP55 series Inverter supports switch-over between different reference channels, and the rules for channel switch-over are shown below.

Present reference channel P00.09	Multi-function terminal function 13 Channel A switches to channel B	Multi-function terminal function 14 Combination setup switches to channel A	Multi-function terminal function 15 Combination setup switches to channel B
A	B	/	/
B	A	/	/
A+B	/	A	B
A-B	/	A	B
Max (A, B)	/	A	B
Min (A, B)	/	A	B

Note: "/" indicates this multi-function terminal is invalid under present reference channel.

When setting the auxiliary frequency inside the Inverter via multi-function terminal UP (10) and DOWN (11), users can increase/decrease the frequency quickly by setting P08.45 (UP terminal frequency incremental change rate) and P08.46 (DOWN terminal frequency decremental change rate).

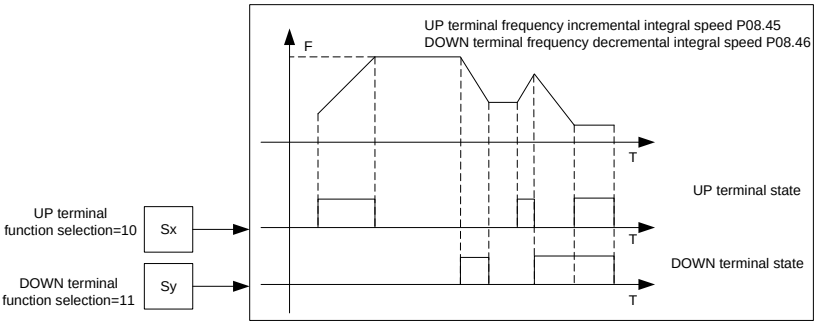

Related parameter list:

Function code	Name	Description	Default value
P00.03	Max. output frequency	P00.04–590.00Hz	50.00Hz
P00.04	Upper limit of running frequency	P00.05–P00.03	50.00Hz
P00.05	Lower limit of running frequency	0.00Hz–P00.04	0.00Hz
P00.06	A frequency command selection	0: Set via keypad 1: Set via AI1 2: Set via AI2 3: Set via AI3 4: Set via high speed pulse HDIA 5: Set via simple PLC program 6: Set via multi-step speed running 7: Set via PID control 8: Set via Modbus/Modbus TCP communication 9: Set via PROFIBUS/CANopen/ DeviceNet communication 10: Set via Ethernet communication 11: Set via high speed pulse HDIB 12: Set via pulse string AB 13: Set via EtherCAT/PROFINET/EtherNet IP communication 14: Set via PLC card 15: Reserved	0
P00.07	B frequency command selection		15
P00.08	Reference object of B frequency command	0: Max. output frequency 1: A frequency command	0

Function code	Name	Description	Default value
P00.09	Combination mode of setup source	0: A 1: B 2: (A+B) 3: (A-B) 4: Max (A, B) 5: Min (A, B)	0
P05.01–P05.06	Function of multi-function digital input terminal (S1–S4, HDIA, HDIB)	10: Frequency increase (UP) 11: Frequency decrease (DOWN) 12: Clear frequency increase/decrease setting 13: Switch-over between setup A and setup B 14: Switch-over between combination setup and setup A 15: Switch-over between combination setup and setup B	/
P08.42	Reserved	/	/
P08.43	Reserved	/	/
P08.44	UP/DOWN terminal control	0x000–0x221 Ones: Frequency enabling selection 0: UP/DOWN terminal setting is valid 1: UP/DOWN terminal setting is invalid Tens: Frequency control selection 0: Valid only when P00.06=0 or P00.07=0 1: Valid for all frequency modes 2: Invalid for multi-step speed when multi-step speed takes priority Hundreds: Action selection at stop 0: Valid 1: Valid during running, clear after stop 2: Valid during running, clear after receiving stop command	0x000
P08.45	UP terminal frequency incremental change rate	0.01–50.00 Hz/s	0.50 Hz/s
P08.46	DOWN terminal frequency decremental change rate	0.01–50.00 Hz/s	0.50 Hz/s
P17.00	Set frequency	0.00Hz–P00.03 (max. output frequency)	0.00Hz
P17.02	Ramps reference frequency	0.00Hz–P00.03 (max. output frequency)	0.00Hz
P17.14	Digital adjustment value	0.00Hz–P00.03	0.00Hz

5.5.9 Analog input

S1 IP55 series Inverter carries two analog input terminals (AI1 is 0–10V/0–20mA (voltage input or current input can be set by P05.50); AI2 is -10–10V) and two high-speed pulse input terminals. Each input can be filtered separately, and the corresponding reference curve can be set by adjusting the reference corresponds to the max. value and min. value.

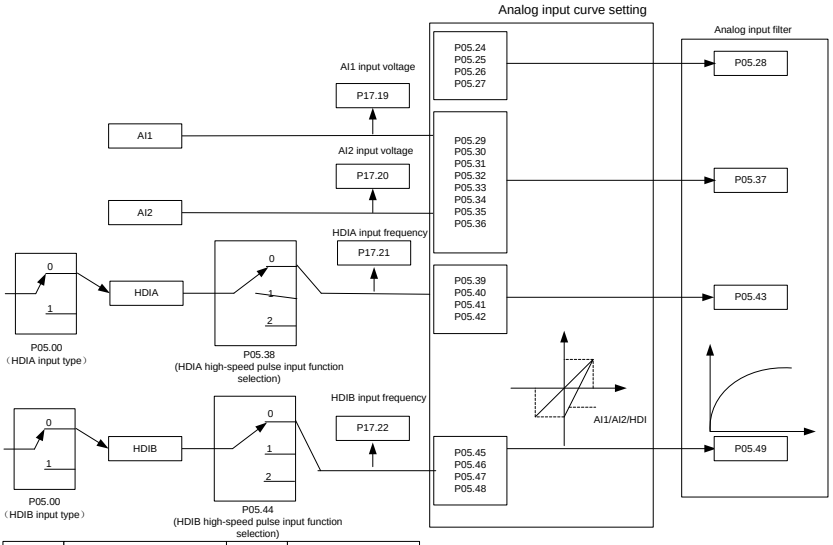

P05.00	Ones: 0: HDIA is high-speed pulse input 1: HDIA is digital input	P05.38	0: Set input via frequency 1: Reserved 2: Input via encoder
P05.00	Tens: 0: HDIB is high-speed pulse input 1: HDIB is digital input	P05.44	0: Set input via frequency 1: Reserved 2: Input via encoder

Related parameter list:

Function code	Name	Description	Default value
P05.00	HDI input type	0x00–0x11 Ones: HDIA input type 0: HDIA is high-speed pulse input 1: HDIA is digital input Tens: HDIB input type 0: HDIB is high-speed pulse input 1: HDIB is digital input	0x00
P05.24	Lower limit value of AI1	0.00V–P05.26	0.00V
P05.25	Corresponding setting of lower limit of AI1	-300.0%–300.0%	0.0%
P05.26	Upper limit value of AI1	P05.24–10.00V	10.00V
P05.27	Corresponding setting of upper limit of AI1	-300.0%–300.0%	100.0%
P05.28	Input filter time of AI1	0.000s–10.000s	0.100s
P05.29	Lower limit value of AI2	-10.00V–P05.31	-10.00V
P05.30	Corresponding setting of lower limit of AI2	-300.0%–300.0%	-100.0%

Function code	Name	Description	Default value
P05.31	Intermediate value 1 of AI2	P05.29–P05.33	0.00V
P05.32	Corresponding setting of intermediate value 1 of AI2	-300.0%–300.0%	0.0%
P05.33	Intermediate value 2 of AI2	P05.31–P05.35	0.00V
P05.34	Corresponding setting of intermediate value 2 of AI2	-300.0%–300.0%	0.0%
P05.35	Upper limit value of AI2	P05.33–10.00V	10.00V
P05.36	Corresponding setting of upper limit of AI2	-300.0%–300.0%	100.0%
P05.37	Input filter time of AI2	0.000s–10.000s	0.100s
P05.38	HDIA high-speed pulse input function	0: Set input via frequency 1: Reserved 2: Input via encoder, used in combination with HDIB	0
P05.39	Lower limit frequency of HDIA	0.000 kHz – P05.41	0.000kHz
P05.40	Corresponding setting of lower limit frequency of HDIA	-300.0%–300.0%	0.0%
P05.41	Upper limit frequency of HDIA	P05.39 –50.000kHz	50.000kHz
P05.42	Corresponding setting of upper limit frequency of HDIA	-300.0%–300.0%	100.0%
P05.43	HDIA frequency input filter time	0.000s–10.000s	0.030s
P05.44	HDIB high-speed pulse input function selection	0: Set input via frequency 1: Reserved 2: Input via encoder, used in combination with HDIA	0
P05.45	Lower limit frequency of HDIB	0.000 kHz – P05.47	0.000kHz
P05.46	Corresponding setting of lower limit frequency of HDIB	-300.0%–300.0%	0.0%
P05.47	Upper limit frequency of HDIB	P05.45 –50.000kHz	50.000kHz
P05.48	Corresponding setting of upper limit frequency of HDIB	-300.0%–300.0%	100.0%
P05.49	HDIB frequency input filter time	0.000s–10.000s	0.030s
P05.50	AI1 input signal type	0–1 0: Voltage type 1: Current type	0

5.5.10 Analog output

The S1 IP55 series Inverter carries one analog output terminal (0–10V/0–20mA) and one high-speed pulse output terminal. Analog output signals can be filtered separately, and the proportional relation can be adjusted by setting the max. value, min. value, and the percentage of their corresponding output. Analog output signal can output motor speed, output frequency, output current, motor torque and motor power at a certain proportion.

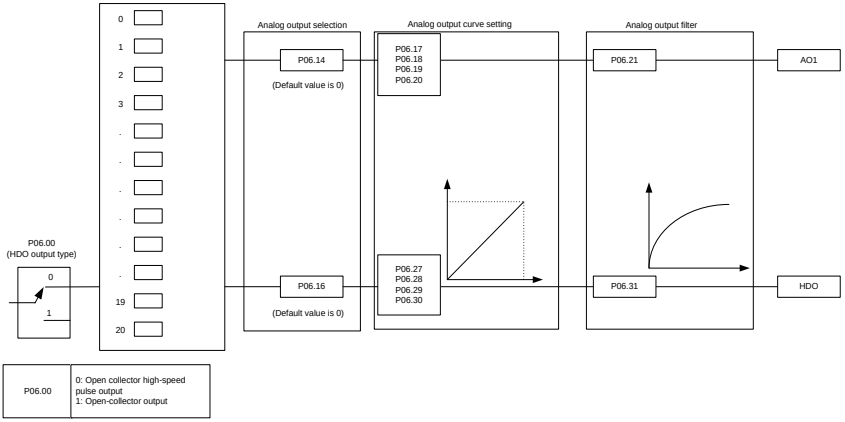

AO output relationship description:

(The min. value and max. value of the output correspond to 0.% and 100.00% of the pulse or analog default output. The actual output voltage or pulse frequency corresponds to the actual percentage, which can be through function codes.

Setting	Function	Description
0	Running frequency	0–Max. output frequency
1	Set frequency	0–Max. output frequency
2	Ramps reference frequency	0–Max. output frequency
3	Running speed	0–Synchronous speed corresponding to max. output frequency
4	Output current (relative to Inverter)	0–Twice the rated current of Inverter
5	Output current (relative to motor)	0–Twice the rated current of motor
6	Output voltage	0–1.5 times of rated voltage of Inverter
7	Output power	0–Twice the rated power of motor
8	Set torque value	0–Twice the motor rated current. A negative value corresponds to 0.0% by default.
9	Output torque	0 – +/-(Twice the motor rated torque)
10	AI1 input value	0–10V/0–20mA
11	AI2 input value	0V–10V. A negative value corresponds to 0.0% by default.
12	AI3 input value	0–10V/0–20mA
13	Input value of high-speed pulse HDIA	0.00–50.00kHz

Setting	Function	Description
14	Value 1 set through Modbus/Modbus TCP communication	0–1000
15	Value 2 set through Modbus/Modbus TCP communication	0–1000
16	Value 1 set through PROFIBUS/CANopen/DeviceNet communication	0–1000
17	Value 2 set through PROFIBUS/CANopen/DeviceNet communication	0–1000
18	Value 1 set through Ethernet communication	0–1000
19	Value 2 set through Ethernet communication	0–1000
20	Input value of high-speed pulse HDIB	0.00–50.00kHz
21	Value 1 set through EtherCAT/PROFINET/ EtherNET IP communication	0–1000. A negative value corresponds to 0.0% by default.
22	Torque current (bipolar)	0–Triple the motor rated current. A negative value corresponds to 0.0% by default.
23	Exciting current	0–Triple the motor rated current. A negative value corresponds to 0.0% by default.
24	Set frequency (bipolar)	0–Max. output frequency. A negative value corresponds to 0.0% by default.
25	Ramp reference frequency (bipolar)	0–Max. output frequency. A negative value corresponds to 0.0% by default.
26	Running speed (bipolar)	0–Synchronous speed corresponding to max. output frequency. A negative value corresponds to 0.0% by default.
27	Value 2 set through EtherCAT/PROFINET/EtherNet IP communication	0–1000
28	AO1 from the Programmable card	0–1000
29	AO2 from the Programmable card	0–1000
30	Running speed	0–Twice the motor rated synchronous speed.
31	Output torque (bipolar)	0–Twice the motor rated torque. A negative value corresponds to 0.0% by default.
32	AI/AO temperature detection output	AO value of AI/AO temperature detection
33–47	Reserved	/

Related parameter list:

Function code	Name	Description	Default value
P06.00	HDO output type	0: Open collector high-speed pulse output 1: Open collector output	0
P06.14	AO1 output selection	0: Running frequency (0–Max. output frequency) 1: Set frequency (0–Max. output frequency) 2: Ramp reference frequency (0–Max. output frequency) 3: Rotational speed (0–Speed corresponding to max. output frequency) 4: Output current (0–Twice the Inverter rated current) 5: Output current (0–Twice the motor rated current) 6: Output voltage (0–1.5 times the Inverter rated voltage) 7: Output power (0–Twice the motor rated power) 8: Set torque (0–Twice the motor rated current) 9: Output torque (Absolute value, 0–+/-Twice the motor rated torque) 10: AI1 input (0–10V/0–20mA) 11: AI2 input (0–10V) 12: AI3 input (0–10V/0–20mA) 13: HDIA input(0.00–50.00kHz) 14: Value 1 set through Modbus/Modbus TCP (0–1000) 15: Value 2 set through Modbus/Modbus TCP (0–1000) 16: Value 1 set through PROFIBUS/CANopen/DeviceNet (0–1000) 17: Value 2 set through PROFIBUS/CANopen/DeviceNet (0–1000) 18: Value 1 set through Ethernet 1 (0–1000) 19: Value 2 set through Ethernet 2 (0–1000) 20: HDIB input (0.00–50.00kHz) 21: Value 1 set through EtherCAT/PROFINET/EtherNet IP (0–	0
P06.15	Reserved		0
P06.16	HDO high-speed pulse output		0

Function code	Name	Description	Default value
		1000) 22: Torque current (bipolar, 0–Triple the motor rated current) 23: Exciting current (bipolar, 0–Triple the motor rated current) 24: Set frequency (bipolar, 0–Max. output frequency) 25: Ramp reference frequency (bipolar, 0–Max. output frequency) 26: Rotational speed (bipolar, 0–Speed corresponding to max. output frequency) 27: Value 2 set through EtherCAT/PROFINET/EtherNet IP (0–1000) 28: AO1 from the Programmable card (0–1000) 29: AO2 from the Programmable card (0–1000)30: Rotational speed (0–Twice the motor rated synchronous speed) 31: Output torque (Actual value, 0–Twice the motor rated torque) 32: AI/AO temperature detection output 33–47: Reserved	
P06.17	Lower limit of AO1 output	-300.0%–P06.19	0.0%
P06.18	Corresponding AO1 output of lower limit	0.00V–10.00V	0.00V
P06.19	Upper limit of AO1 output	P06.17–300.0%	100.0%
P06.20	Corresponding AO1 output of upper limit	0.00V–10.00V	10.00V
P06.21	AO1 output filter time	0.000s–10.000s	0.000s
P06.22	Reserved	/	/
P06.23	PTC constant output current setting	0.000–20.000mA	4.000 mA
P06.24	PTC resistance alarm threshold	0–60000Ω	750Ω
P06.25	PTC resistance alarm recovery threshold	0–60000Ω	150Ω
P06.26	Actual PTC resistance	0–60000Ω	0Ω
P06.27	Lower limit of HDO output	-300.0%–P06.29	0.0%
P06.28	Corresponding HDO output of lower limit	0.00–50.00kHz	0.0kHz
P06.29	Upper limit of HDO output	P06.27–300.0%	100.0%
P06.30	Corresponding HDO output of upper limit	0.00–50.00kHz	50.00kHz
P06.31	HDO output filter time	0.000s–10.000s	0.000s

5.5.11 Digital input

The S1 IP55 series Inverter carries four programmable digital input terminals and two HDI input terminals. The function of all the digital input terminals can be programmed by function codes. HDI input terminal can be set to act as high-speed pulse input terminal or common digital input terminal; if it is set to act as high-speed pulse input terminal, users can also set HDIA or HDIB high-speed pulse input to serve as the frequency reference and encoder signal input.

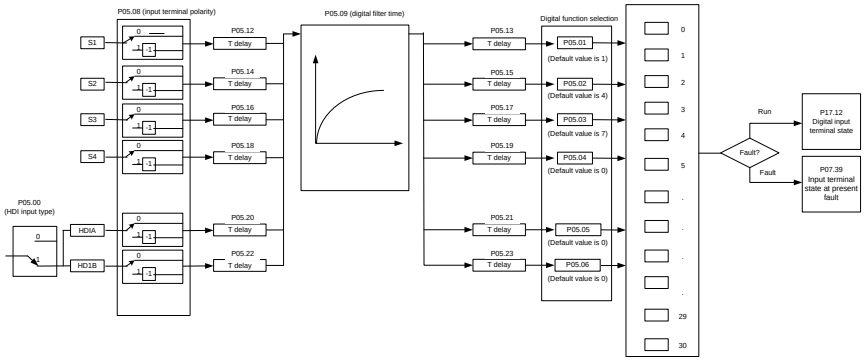

This parameter is used to set the corresponding function of digital multi-function input terminals.

Note: Two different multi-function input terminals cannot be set to the same function.

Set value	Function	Description
0	No function	The Inverter does not act even if there is signal input; users can set the unused terminals to "no function" to avoid misacts.
1	Forward running (FWD)	Control the forward/reverse running of the Inverter by external terminals.
2	Reverse running (REV)	
3	3-wire control	Set the Inverter running mode to the 3-wire control mode by this terminal. See P05.13 for details.
4	Forward jogging	Frequency when jogging, see P08.06, P08.07 and P08.08 for jogging acceleration/deceleration time.
5	Reverse jogging	
6	Coast to stop	The Inverter blocks output, and the stop process of motor is uncontrolled by the Inverter. This mode is applied in cases of large-inertia load and free stop time; its definition is the same with P01.08, and it is mainly used in remote control.
7	Fault reset	External fault reset function, its function is the same with the STOP/RST key on the keypad. This function can be used in remote fault reset.
8	Running pause	The Inverter decelerates to stop, however, all the running parameters are in memory state, e.g. PLC

<table>
<tr><th>Set value</th><th>Function</th><th>Description</th></tr>
<tr><td></td><td></td><td>parameter, wobbling frequency, and PID parameter. After this signal disappears, the Inverter will revert to the state before stop.</td></tr>
<tr><td>9</td><td>External fault input</td><td>When external fault signal is transmitted to the Inverter, the Inverter releases fault alarm and stops.</td></tr>
<tr><td>10</td><td>Frequency increase (UP)</td><td rowspan="3">Used to change the frequency-increase/decrease command when the frequency is given by external terminals.
 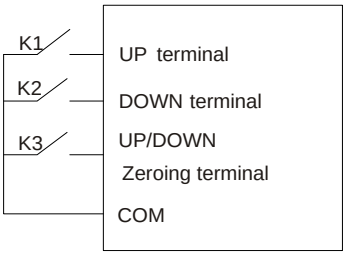

The terminal used to clear frequency-increase/ decrease setting can clear the frequency value of auxiliary channel set by UP/DOWN, thus restoring the reference frequency to the frequency given by main reference frequency command channel.</td></tr>
<tr><td>11</td><td>Frequency decrease (DOWN)</td></tr>
<tr><td>12</td><td>Clear frequency increase/decrease setting</td></tr>
<tr><td>13</td><td>Switching between A setting and B setting</td><td rowspan="3">This function is used to switch between the frequency setting channels.
A frequency reference channel and B frequency reference channel can be switched by no. 13 function; the combination channel set by P00.09 and the A frequency reference channel can be switched by no. 14 function; the combination channel set by P00.09 and the B frequency reference channel can be switched by no. 15 function.</td></tr>
<tr><td>14</td><td>Switching between combination setting and A setting</td></tr>
<tr><td>15</td><td>Switching between combination setting and B setting</td></tr>
<tr><td>16</td><td>Multi-step speed terminal 1</td><td rowspan="4">16-step speeds can be set by combining digital states of these four terminals.
Note: Multi-step speed 1 is low bit, multi-step speed 4 is high bit.
<table>
<tr><td>Multi-step speed 4</td><td>Multi-step speed 3</td><td>Multi-step speed 2</td><td>Multi-step speed 1</td></tr>
<tr><td>BIT3</td><td>BIT2</td><td>BIT1</td><td>BIT0</td></tr>
</table></td></tr>
<tr><td>17</td><td>Multi-step speed terminal 2</td></tr>
<tr><td>18</td><td>Multi-step speed terminal 3</td></tr>
<tr><td>19</td><td>Multi-step speed terminal 4</td></tr>
<tr><td>20</td><td>Multi-step speed pause</td><td>Pause multi-step speed selection function to keep the set value in present state.</td></tr>
</table>

<table>
<tr><th>Set value</th><th>Function</th><th>Description</th></tr>
<tr><td>21</td><td>Acceleration/deceleration time selection 1</td><td rowspan="2">Use these two terminals to select four groups of acceleration/decoration time.
<table>
<tr><th>Terminal 1</th><th>Terminal 2</th><th>Acceleration or deceleration time selection</th><th>Corresponding parameter</th></tr>
<tr><td>OFF</td><td>OFF</td><td>Acceleration/ deceleration time 1</td><td>P00.11/P00.12</td></tr>
<tr><td>ON</td><td>OFF</td><td>Acceleration/ deceleration time 2</td><td>P08.00/P08.01</td></tr>
<tr><td rowspan="2">OFF</td><td rowspan="2">ON</td><td rowspan="2">Acceleration/ deceleration time 3</td><td rowspan="2">P08.02/P08.03</td></tr>
<tr><td>ON</td><td>ON</td><td>Acceleration/ deceleration time 4</td><td>P08.04/P08.05</td></tr>
</table></td></tr>
<tr><td>22</td><td>Acceleration/deceleration time selection 2</td></tr>
<tr><td>23</td><td>Simple PLC stop reset</td><td>Restart simple PLC process and clear previous PLC state information.</td></tr>
<tr><td>24</td><td>Simple PLC pause</td><td>The program pauses during PLC execution, and keeps running in current speed step. After this function is cancelled, simple PLC keeps running.</td></tr>
<tr><td>25</td><td>PID control pause</td><td>PID is ineffective temporarily, and the Inverter maintains current frequency output.</td></tr>
<tr><td>26</td><td>Wobbling frequency pause (stop at current frequency)</td><td>The Inverter pauses at current output. After this function is canceled, it continues wobbling-frequency operation at current frequency.</td></tr>
<tr><td>27</td><td>Wobbling frequency reset (revert to center frequency)</td><td>The set frequency of Inverter reverts to center frequency.</td></tr>
<tr><td>28</td><td>Counter reset</td><td>Zero out the counter state.</td></tr>
<tr><td>29</td><td>Switching between speed control and torque control</td><td>The Inverter switches from torque control mode to speed control mode, or vice versa.</td></tr>
<tr><td>30</td><td>Acceleration/deceleration disabled</td><td>Ensure the Inverter will not be impacted by external signals (except for stop command), and maintains current output frequency.</td></tr>
<tr><td>31</td><td>Counter trigger</td><td>Enable pulse counting of the counter.</td></tr>
<tr><td>33</td><td>Clear frequency increase/decrease setting temporarily</td><td>When the terminal is closed, the frequency value set by UP/DOWN can be cleared to restore the reference frequency to the frequency given by frequency command channel; when terminal is disconnected, it will revert to the frequency value after frequency increase/decrease setting.</td></tr>
<tr><td>34</td><td>DC brake</td><td>The Inverter starts DC brake immediately after the command becomes valid.</td></tr>
<tr><td>35</td><td>Switching between motor 1 and motor 2</td><td>When this terminal is valid, users can realize switch-over control of two motors.</td></tr>
<tr><td>36</td><td>Command switches to keypad</td><td>When this terminal is valid, the running command channel will switch to keypad compulsorily. If this function becomes invalid, the running command channel will revert to the original state.</td></tr>
</table>

Set value	Function	Description
37	Command switches to terminal	When this terminal is valid, the running command channel will switch to terminal compulsorily. If this function becomes invalid, the running command channel will revert to the original state.
38	Command switches to communication	When this terminal is valid, the running command channel will switch to communication compulsorily. If this function becomes invalid, the running command channel will revert to the original state.
39	Pre-exciting command	When this terminal is valid, motor pre-exciting will be started until this terminal becomes invalid.
40	Zero out power consumption quantity	After this command becomes valid, the power consumption quantity of the Inverter will be zeroed out.
41	Maintain power consumption quantity	When this command is valid, current operation of the Inverter will not impact the power consumption quantity.
42	Source of upper torque limit switches to keypad	When this command is valid, the upper limit of the torque will be set by keypad
43	Position reference point input	Valid only for S1, S2, and S3.
44	Disable spindle orientation	Spindle orientation is invalid.
45	Spindle zeroing/local position zeroing	Spindle positioning is triggered.
46	Spindle zero position selection 1	Spindle zero position selection 1.
47	Spindle zero position selection 2	Spindle zero position selection 2.
48	Spindle scale division selection 1	Spindle scale division selection 1.
49	Spindle scale division selection 2	Spindle scale division selection 2.
50	Spindle scale division selection 3	Spindle scale division selection 3.
51	Position/speed control switchover terminal	Terminal for switching between position control and speed control.
52	Disable pulse input	Pulse input is invalid when the terminal is valid.
53	Clear position deviation	Used to clear the input deviation of position loop.
54	Switch position proportional gains	Used to switch position proportional gains.
55	Enable cyclic digital positioning	Cyclic positioning can be enabled when digital positioning is valid.
56	Emergency stop	When this command is valid, the motor decelerate to emergency stop as per the time set by P01.26.
57	Motor over-temperature fault input	Motor stops at motor over-temperature fault input.

Set value	Function	Description
59	FVC switches to V/F control	When this terminal is valid in stop state, switch to V/F control.
60	Switch to FVC control	When this terminal is valid in stop state, switch to closed-loop vector control.
61	PID polarity switch-over	Switching the output polarity of PID, this terminal should be used in conjunction with P09.03
66	Zero out the counter	Zero out the position counting value
67	Pulse increase	When the terminal function is valid, the pulse input is increased according to the P21.27 pulse speed.
68	Enable pulse superimposition	When the pulse superimposition is enabled, pulse increase and pulse decrease are effective.
69	Pulse decrease	When the terminal function is valid, the pulse input is decreased according to the P21.27 pulse speed.
70	Electronic gear selection	When the terminal is valid, the proportional numerator is switched to the P21.30 numerator of the 2nd command ratio.
71	Switch to mater	In stopped state, if the function is valid, the master is used.
72	Switch to slave	In stopped state, if the function is valid, the slave is used.
73	Reset roll diameter	Used to reset the roll diameter when the tension control function is enabled.
74	Switch winding/unwinding	Used to switch winding/unwinding modes when the tension control function is enabled.
75	Tension control pre-drive	If the terminal is valid when the tension control function is enabled, tension control pre-drive is performed.
76	Disable roll diameter calculation	If the terminal is valid when the tension control function is enabled, roll diameter calculation is disabled.
77	Clear alarm display	Used to clear the alarm display when the tension control function is enabled.
78	Manual braking of tension control	If the terminal is valid when the tension control function is enabled, manual braking is activated.
79	Trigger forced feeding interrupt	If the terminal is valid when the tension control function is enabled, a feeding interrupt signal is triggered forcibly.
80	Initial roll diameter 1	Used to select different initial roll diameters by combining with the initial roll diameter 2 when the tension control function is enabled.
81	Initial roll diameter 2	Used to select different initial roll diameters by combining with the initial roll diameter 1 when the tension control function is enabled.
82	Trigger fire mode control	In fire mode, if the terminal is valid, the fire mode control signal is triggered.

Set value	Function	Description
83	Switch tension PID parameters	Used to switch two PID parameter groups when the tension control function is enabled. The first group is used by default. If the terminal is valid, the second group is used.
84–95	Reserved	/

Related parameter list:

Function code	Name	Description	Default value
P05.00	HDI input type	0x00–0x11 Ones: HDIA input type 0: HDIA is high-speed pulse input 1: HDIA is digital input Tens: HDIB input type 0: HDIB is high-speed pulse input 1: HDIB is digital input	0x00
P05.01	Function of S1 terminal	0: No function 1: Forward running 2: Reverse running 3: 3-wire control 4: Forward jogging 5: Reverse jogging 6: Coast to stop 7: Fault reset 8: Running pause 9: External fault input 10: Frequency increase (UP) 11: Frequency decrease (DOWN) 12: Clear frequency increase/decrease setting 13: Switch-over between setup A and setup B 14: Switch-over between combination setting and A setting 15: Switch-over between combination setting and setup B 16: Multi-step speed terminal 1 17: Multi-step speed terminal 2 18: Multi-step speed terminal 3 19: Multi-step speed terminal 4 20: Multi-step speed pause 21: Acceleration/deceleration time selection 1 22: Acceleration/deceleration time selection 2 23: Simple PLC stop reset	1
P05.02	Function of S2 terminal		4
P05.03	Function of S3 terminal		7
P05.04	Function of S4 terminal		0
P05.05	Function of HDIA terminal		0
P05.06	Function of HDIB terminal		0
P05.07	Reserved		0

Function code	Name	Description	Default value
		24: Simple PLC pause 25: PID control pause 26: Wobbling frequency pause 27: Wobbling frequency reset 28: Counter reset 29: Switching between speed control and torque control 30: Acceleration/deceleration disabled 31: Counter trigger 32: Reserved 33: Clear frequency increase/decrease setting temporarily 34: DC brake 35: Switching between motor 1 and motor 2 36: Command switches to keypad 37: Command switches to terminal 38: Command switches to communication 39: Pre-exciting command 40: Zero out power consumption quantity 41: Maintain power consumption quantity 42: Source of upper torque limit switches to keypad 43: Position reference point input (only valid for S1, S2 and S3) 44: Disable spindle orientation 45: Spindle zeroing/local positioning zeroing 46: Spindle zero position selection 1 47: Spindle zero position selection 2 48: Spindle scale division selection 1 49: Spindle scale division selection 2 50: Spindle scale division selection 3 51: Position/speed control switchover terminal 52: Disable pulse input 53: Clear position deviation 54: Switch position proportional gains 55: Enable cyclic digital positioning 56: Emergency stop 57: Motor over-temperature fault	

Function code	Name	Description	Default value
		input 59: Switch to V/F control 60: Switch to FVC control 61: PID polarity switch-over 66: Zero out encoder counting 67: Pulse increase 68: Enable pulse superimposition 69: Pulse decrease 70: Electronic gear selection 71: Switch to master 72: Switch to slave 73: Reset the roll diameter 74: Switch winding/unwinding 75: Pre-drive 76: Disable roll diameter calculation 77: Clear alarm display 78: Manual braking 79: Trigger forced feeding interrupt 80: Initial roll diameter 1 81: Initial roll diameter 2 82: Trigger fire mode control 83: Switch tension PID parameters 84–95: Reserved	
P05.08	Polarity of input terminal	0x00–0x3F	0x00
P05.09	Digital filter time	0.000–1.000s	0.010s
P05.10	Virtual terminal setting	0x00–0x3F (0: disable, 1: enable) BIT0: S1 virtual terminal BIT1: S2 virtual terminal BIT2: S3 virtual terminal BIT3: S4 virtual terminal BIT4: HDIA virtual terminal BIT5: HDIB virtual terminal	0x00
P05.11	2/3 wire control mode	0: 2-wire control 1 1: 2-wire control 2 2: 3-wire control 1 3: 3-wire control 2	0
P05.12	S1 terminal switch-on delay	0.000–50.000s	0.000s
P05.13	S1 terminal switch-off delay	0.000–50.000s	0.000s
P05.14	S2 terminal switch-on delay	0.000–50.000s	0.000s
P05.15	S2 terminal switch-off delay	0.000–50.000s	0.000s
P05.16	S3 terminal switch-on delay	0.000–50.000s	0.000s
P05.17	S3 terminal switch-off delay	0.000–50.000s	0.000s
P05.18	S4 terminal switch-on delay	0.000–50.000s	0.000s
P05.19	S4 terminal switch-off delay	0.000–50.000s	0.000s
P05.20	HDIA terminal switch-on delay	0.000–50.000s	0.000s

Function code	Name	Description	Default value
P05.21	HDIA terminal switch-off delay	0.000–50.000s	0.000s
P05.22	HDIB terminal switch-on delay	0.000–50.000s	0.000s
P05.23	HDIB terminal switch-off delay	0.000–50.000s	0.000s
P07.39	Input terminal state of present fault	/	0
P17.12	Digital input terminal state	/	0

5.5.12 Digital output

The S1 IP55 series Inverter carries two groups of relay output terminals, one open collector Y output terminal and one high-speed pulse output (HDO) terminal. The function of all the digital output terminals can be programmed by function codes, of which the high-speed pulse output terminal HDO can also be set to high-speed pulse output or digital output by function code.

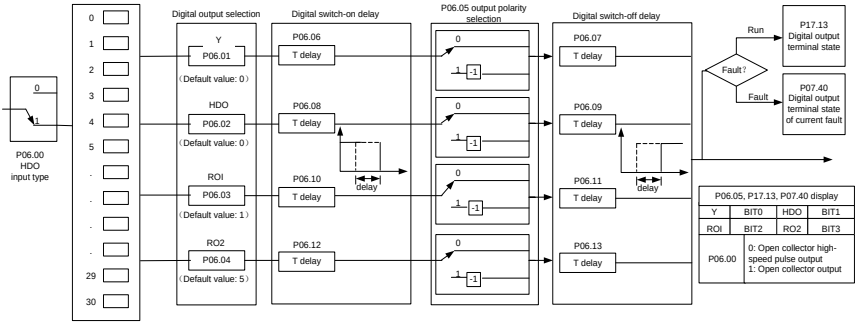

The table below lists the options for the above four function parameters, and users are allowed to select the same output terminal functions repetitively.

Set value	Function	Description
0	Invalid	Output terminal has no function
1	In running	Output ON signal when there is frequency output during running
2	In forward running	Output ON signal when there is frequency output during forward running
3	In reverse running	Output ON signal when there is frequency output during reverse running
4	In jogging	Output ON signal when there is frequency output during jogging
5	Inverter fault	Output ON signal when Inverter fault occurred
6	Frequency level detection FDT1	Refer to P08.32 and P08.33
7	Frequency level detection FDT2	Refer to P08.34 and P08.35
8	Frequency reached	Refer to P08.36

Set value	Function	Description
9	Running in zero speed	Output ON signal when the Inverter output frequency and reference frequency are both zero.
10	Reach upper limit frequency	Output ON signal when the running frequency reaches upper limit frequency
11	Reach lower limit frequency	Output ON signal when the running frequency reached lower limit frequency
12	Ready to run	Main circuit and control circuit powers are established, the protection functions do not act; when the Inverter is ready to run, output ON signal.
13	In pre-exciting	Output ON signal during pre-exciting of the Inverter
14	Overload pre-alarm	Output ON signal after the pre-alarm time elapsed based on the pre-alarm threshold; see P11.08–P11.10 for details.
15	Underload pre-alarm	Output ON signal after the pre-alarm time elapsed based on the pre-alarm threshold; see P11.11–P11.12 for details.
16	Simple PLC state completed	Output signal when current stage of simple PLC is completed
17	Simple PLC cycle completed	Output signal when a single cycle of simple PLC operation is completed
23	Virtual terminal output of Modbus/Modbus TCP communication	Output corresponding signal based on the set value of Modbus/Modbus TCP; output ON signal when it is set to 1, output OFF signal when it is set to 0
24	Virtual terminal output of POROFIBUS/CANopen communication	Output corresponding signal based on the set value of PROFIBUS/CANopen; output ON signal when it is set to 1, output OFF signal when it is set to 0
25	Virtual terminal output of Ethernet communication	Output corresponding signal based on the set value of Ethernet; output ON signal when it is set to 1, output OFF signal when it is set to 0.
26	DC bus voltage established	Output is valid when the bus voltage is above the undervoltage threshold of the inverter.
27	Z pulse output	Output is valid when the encoder Z pulse is arrived, and is invalid after 10 ms.
28	During pulse superposition	Output is valid when the pulse superposition terminal input function is valid
29	STO action	Output when STO fault occurred
30	Positioning completed	Output is valid when position control positioning is completed
31	Spindle zeroing completed	Output is valid when spindle zeroing is completed

Set value	Function	Description
32	Spindle scale-division completed	Output is valid when spindle scale-division is completed
33	Speed limit reached during torque control	Output is valid when the frequency is limited
34	Virtual terminal output of EtherCAT/PROFINET/EtherNet IP communication	The corresponding signal is output according to the set value of PROFINET communication. When it is set to 1, the ON signal is output, and when it is set to 0, the OFF signal is output.
35	Reserved	
36	Speed/position control switch-over completed	Output is valid when the mode switch-over is completed
37	Any frequency reached	The frequency reached signal is output when the present ramp reference frequency is greater than the detection value for frequency being reached.
38–40	Reserved	
41	Y1	Y1 from the programmable card
42	Y2	Y2 from the programmable card
43	HDO	HDO from the programmable card
44	RO1	RO1 from the programmable card
45	RO2	RO2 from the programmable card
46	RO3	RO3 from the programmable card
47	RO4	RO4 from the programmable card
48	EC PT100 detected OH pre-alarm	Pre-alarm of overheating (OH) detected by the expansion card (EC) with PT100.
49	EC PT1000 detected OH pre-alarm	Pre-alarm of OH detected by the EC with PT1000.
50	AI/AO detected OH pre-alarm	Pre-alarm of OH detected by AI/AO.
51	Stopped or running at zero speed	The Inverter is in stopped state or running at zero speed.
52	Disconnection detected in tension control	Disconnection is detected when the disconnection detection is enabled in tension control.
53	Roll diameter setting reached	The set roll diameter is reached during running in tension control.
54	Max. roll diameter reached	The max. roll diameter is reached during running in tension control.
55	Min. roll diameter reached	The min. roll diameter is reached during running in tension control.
56	Fire control mode enabled	The fire mode is turned on.
57–63	Reserved	/

Related parameter list:

Function code	Name	Description	Default value
P06.00	HDO output type	0: Open collector high-speed pulse output 1: Open collector output	0
P06.01	Y1 output selection	0: Invalid 1: In running 2: In forward running 3: In reverse running 4: In jogging 5: Inverter fault 6: Frequency level detection FDT1 7: Frequency level detection FDT2 8: Frequency reached 9: Running in zero speed 10: Reach upper limit frequency 11: Reach lower limit frequency 12: Ready to run 13: In pre-exciting 14: Overload pre-alarm 15: Underload pre-alarm 16: Simple PLC stage completed 17: Simple PLC cycle completed 18: Reach set counting value 19: Reach designated counting value 20: External fault is valid 21: Reserved 22: Reach running time 23: Virtual terminal output of Modbus/Modbus TCP communication 24: Virtual terminal output of POROFIBUS/CANopen communication 25: Virtual terminal output of Ethernet communication 26: DC bus voltage established 27: Z pulse output 28: During pulse superposition 29: STO action 30: Positioning completed 31: Spindle zeroing completed 32: Spindle scale-division completed 33: Speed limit reached in torque control 34: Virtual terminal output of EtherCAT/PROFINET/EtherNet IP communication 35: Reserved 36: Speed/position control switch-over completed	0
P06.02	HDO output selection		0
P06.03	Relay RO1 output selection		1
P06.04	Relay RO2 output selection		5

Function code	Name	Description	Default value
		37: Any frequency reached 38–40: Reserved 41: Y1 from the programmable card 42: Y2 from the programmable card 43: HDO from the programmable card 44: RO1 from the programmable card 45: RO2 from the programmable card 46: RO3 from the programmable card 47: RO4 from the programmable card 41: C_Y1 from PLC (set P27.00 to 1) 42: C_Y2 from PLC (set P27.00 to1) 43: C_HDO from PLC (set P27.00 to 1) 44: C_RO1 from PLC (set P27.00 to 1) 45: C_RO2 from PLC (set P27.00 to 1) 46: C_RO3 from PLC 3 (set P27.00 to 1) 47: C_RO4 from PLC (set P27.00 to 1) 48: EC PT100 detected OH pre-alarm 49: EC PT1000 detected OH pre-alarm 50: AI/AO detected OH pre-alarm 51: Stopped or running at zero speed 52: Disconnection detected in tension control 53: Roll diameter setting reached 54: Max. roll diameter reached 55: Min. roll diameter reached 56: Fire control mode enabled 57–63: Reserved	
P06.05	Output terminal polarity selection	0x00–0x0F	0x00
P06.06	Y switch-on delay	0.000–50.000s	0.000s
P06.07	Y switch-off delay	0.000–50.000s	0.000s
P06.08	HDO switch-on delay	0.000–50.000s (valid only when P06.00=1)	0.000s
P06.09	HDO switch-off delay	0.000–50.000s (valid only when P06.00=1)	0.000s
P06.10	Relay RO1 switch-on delay	0.000–50.000s	0.000s
P06.11	Relay RO1 switch-off delay	0.000–50.000s	0.000s
P06.12	Relay RO2 switch-on delay	0.000–50.000s	0.000s
P06.13	Relay RO2 switch-off delay	0.000–50.000s	0.000s
P07.40	Output terminal state of present fault	/	0
P17.13	Digital output terminal state	/	0

5.5.13 Simple PLC

Simple PLC is a multi-step speed generator, and the Inverter can change the running frequency and direction automatically based on the running time to fulfill process requirements. Previously, such function was realized with external PLC, while now, the Inverter itself can achieve this function.

The S1 IP55 series Inverter can realize 16-step speeds control, and provide four groups of acceleration/deceleration time for users to choose from.

After the set PLC completes one cycle (or one section), one ON signal can be output by the multi-function relay.

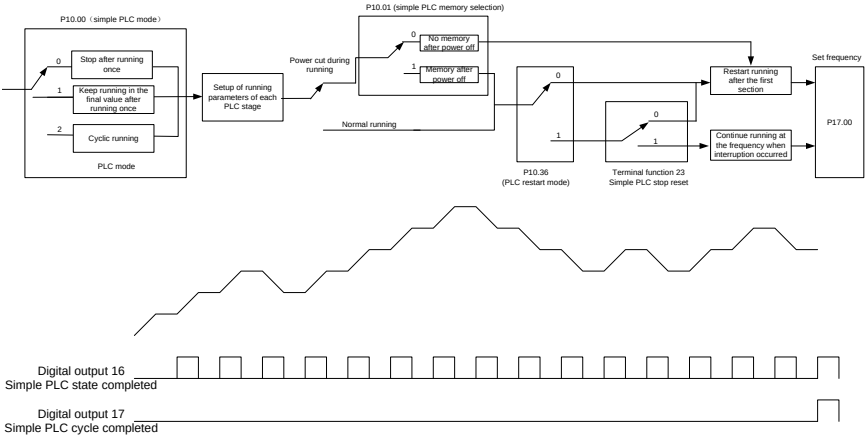

Related parameter list:

Function code	Name	Description	Default value
P05.01–P05.06	Digital input function	23: Simple PLC stop reset 24: Simple PLC pause 25: PID control pause	
P06.01–P06.04	Digital output function	16: Simple PLC stage reached 17: Simple PLC cycle reached	
P10.00	Simple PLC mode	0: Stop after running once 1: Keep running in the final value after running once 2: Cyclic running	0
P10.01	Simple PLC memory selection	0: No memory after power down 1: Memory after power down	0
P10.02	Multi-step speed 0	-300.0–300.0%	0.0%
P10.03	Running time of step 0	0.0–6553.5s (min)	0.0s
P10.04	Multi-step speed 1	-300.0–300.0%	0.0%
P10.05	Running time of step 1	0.0–6553.5s (min)	0.0s
P10.06	Multi-step speed 2	-300.0–300.0%	0.0%
P10.07	Running time of step 2	0.0–6553.5s (min)	0.0s
P10.08	Multi-step speed 3	-300.0–300.0%	0.0%

Function code	Name	Description	Default value
P10.09	Running time of step 3	0.0–6553.5s (min)	0.0s
P10.10	Multi-step speed 4	-300.0–300.0%	0.0%
P10.11	Running time of step 4	0.0–6553.5s (min)	0.0s
P10.12	Multi-step speed 5	-300.0–300.0%	0.0%
P10.13	Running time of step 5	0.0–6553.5s (min)	0.0s
P10.14	Multi-step speed 6	-300.0–300.0%	0.0%
P10.15	Running time of step 6	0.0–6553.5s (min)	0.0s
P10.16	Multi-step speed 7	-300.0–300.0%	0.0%
P10.17	Running time of step 7	0.0–6553.5s (min)	0.0s
P10.18	Multi-step speed 8	-300.0–300.0%	0.0%
P10.19	Running time of step 8	0.0–6553.5s (min)	0.0s
P10.20	Multi-step speed 9	-300.0–300.0%	0.0%
P10.21	Running time of step 9	0.0–6553.5s (min)	0.0s
P10.22	Multi-step speed 10	-300.0–300.0%	0.0%
P10.23	Running time of step 10	0.0–6553.5s (min)	0.0s
P10.24	Multi-step speed 11	-300.0–300.0%	0.0%
P10.25	Running time of step 11	0.0–6553.5s (min)	0.0s
P10.26	Multi-step speed 12	-300.0–300.0%	0.0%
P10.27	Running time of step 12	0.0–6553.5s (min)	0.0s
P10.28	Multi-step speed 13	-300.0–300.0%	0.0%
P10.29	Running time of step 13	0.0–6553.5s (min)	0.0s
P10.30	Multi-step speed 14	-300.0–300.0%	0.0%
P10.31	Running time of step 14	0.0–6553.5s (min)	0.0s
P10.32	Multi-step speed 15	-300.0–300.0%	0.0%
P10.33	Running time of step 15	0.0–6553.5s (min)	0.0s
P10.36	PLC restart mode	0: Restart from the first section 1: Continue running at the frequency when interruption occurred	0
P10.34	Acceleration/deceleration time of 0–7 stage of simple PLC	0x0000–0XFFFF	0000
P10.35	Acceleration/deceleration time of 8–15 stage of simple PLC	0x0000–0XFFFF	0000
P17.00	Set frequency	0.00Hz–P00.03 (max. output frequency)	0.00Hz
P17.27	Actual stage of simple PLC	Displays the present stage of the simple PLC function.	0

5.5.14 Multi-step speed running

Set the parameters used in multi-step speed running. the S1 IP55 series Inverter can set 16-step speeds, which are selectable by multi-step speed terminals 1–4, corresponding to multi-step speed 0 to multi-step speed 15.

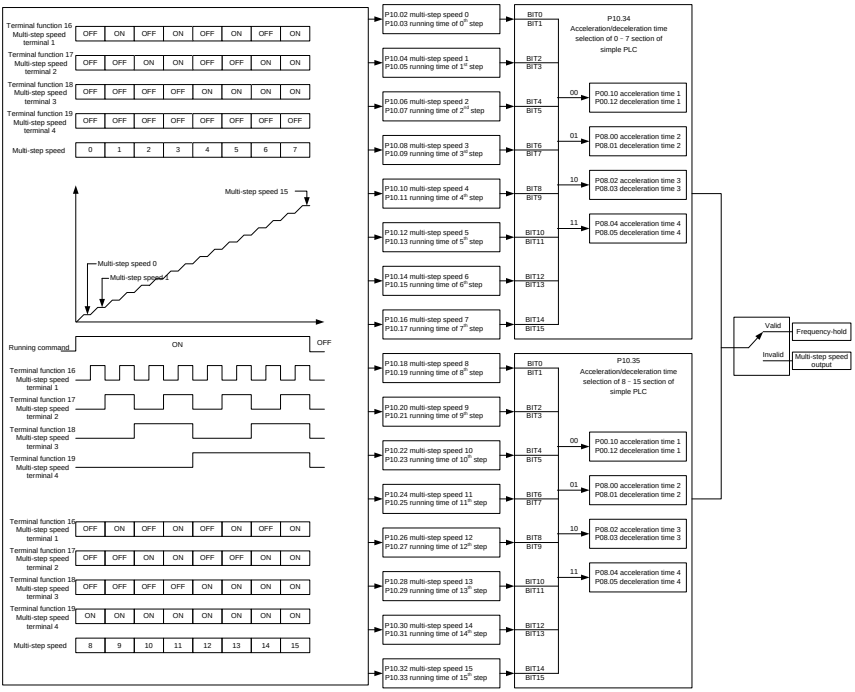

Related parameter list:

Function code	Name	Description	Default value
P05.01–P05.06	Digital input function selection	16: Multi-step speed terminal 1 17: Multi-step speed terminal 2 18: Multi-step speed terminal 3 19: Multi-step speed terminal 4 20: Multi-step speed pause	
P10.02	Multi-step speed 0	-300.0–300.0%	0.0%
P10.03	Running time of step 0	0.0–6553.5s (min)	0.0s
P10.04	Multi-step speed 1	-300.0–300.0%	0.0%
P10.05	Running time of step 1	0.0–6553.5s (min)	0.0s
P10.06	Multi-step speed 2	-300.0–300.0%	0.0%
P10.07	Running time of step 2	0.0–6553.5s (min)	0.0s
P10.08	Multi-step speed 3	-300.0–300.0%	0.0%
P10.09	Running time of step 3	0.0–6553.5s (min)	0.0s
P10.10	Multi-step speed 4	-300.0–300.0%	0.0%
P10.11	Running time of step 4	0.0–6553.5s (min)	0.0s
P10.12	Multi-step speed 5	-300.0–300.0%	0.0%
P10.13	Running time of step 5	0.0–6553.5s (min)	0.0s
P10.14	Multi-step speed 6	-300.0–300.0%	0.0%

Function code	Name	Description	Default value
P10.15	Running time of step 6	0.0–6553.5s (min)	0.0s
P10.16	Multi-step speed 7	-300.0–300.0%	0.0%
P10.17	Running time of step 7	0.0–6553.5s (min)	0.0s
P10.18	Multi-step speed 8	-300.0–300.0%	0.0%
P10.19	Running time of step 8	0.0–6553.5s (min)	0.0s
P10.20	Multi-step speed 9	-300.0–300.0%	0.0%
P10.21	Running time of step 9	0.0–6553.5s (min)	0.0s
P10.22	Multi-step speed 10	-300.0–300.0%	0.0%
P10.23	Running time of step 10	0.0–6553.5s (min)	0.0s
P10.24	Multi-step speed 11	-300.0–300.0%	0.0%
P10.25	Running time of step 11	0.0–6553.5s (min)	0.0s
P10.26	Multi-step speed 12	-300.0–300.0%	0.0%
P10.27	Running time of step 12	0.0–6553.5s (min)	0.0s
P10.28	Multi-step speed 13	-300.0–300.0%	0.0%
P10.29	Running time of step 13	0.0–6553.5s (min)	0.0s
P10.30	Multi-step speed 14	-300.0–300.0%	0.0%
P10.31	Running time of step 14	0.0–6553.5s (min)	0.0s
P10.32	Multi-step speed 15	-300.0–300.0%	0.0%
P10.33	Running time of step 15	0.0–6553.5s (min)	0.0s
P10.34	Acceleration/ deceleration time selection of 0–7 section of simple PLC	0x0000–0XFFFF	0000
P10.35	Acceleration/ deceleration time selection of 8–15 section of simple PLC	0x0000–0XFFFF	0000
P17.27	Actual stage of simple PLC	Displays the present stage of the simple PLC function.	0

5.5.15 PID control

PID control, a common mode for process control, is mainly used to adjust the Inverter output frequency or output voltage by performing scale-division, integral and differential operations on the difference between feedback signal of controlled variables and signal of the target, thus forming a negative feedback system to keep the controlled variables above the target. It is applicable to flow control, pressure control, temperature control, and so on. The following is the basic schematic block diagram for output frequency regulation.

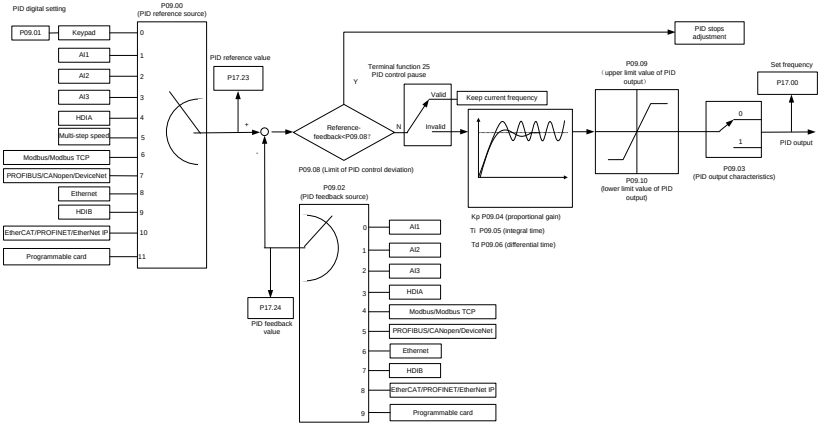

Introduction to the working principles and control methods for PID control

Proportional control (Kp):

When the feedback is different from the reference, the output will be proportional to the difference. If such a difference is constant, the regulating variable will also be constant. Proportional control can respond to feedback changes rapidly, however, it cannot eliminate the difference by itself. A larger the proportional gain indicates a faster regulating speed, but a too large gain will result in oscillation. To solve this problem, set the integral time to a large value and the differential time to 0, run the system only with proportional control, and then change the reference to observe the difference (that is, static difference) between the feedback signal and reference. If the static difference occurs in the direction of reference change (such as reference increase, where the feedback is always less than the reference after system stabilizes), continue increasing the proportional gain; otherwise, decrease the proportional gain. Repeat this process until the static difference becomes small.

Integral time (Ti):

When feedback deviates from reference, the output regulating variable accumulates continuously, if the deviation persists, the regulating variable will increase continuously until deviation disappears. Integral regulator can be used to eliminate static difference; however, too large regulation may lead to repetitive overshoot, which will cause system instability and oscillation. The feature of oscillation caused by strong integral effect is that the feedback signal fluctuates up and down based on the reference variable, and fluctuation range increases gradually until oscillation occurred. Integral time parameter is generally regulated gradually from large to small until the stabilized system speed fulfills the requirement.

Derivative time (Td):

When the deviation between feedback and reference changes, output the regulating variable which is proportional to the deviation variation rate, and this regulating variable is only related to the direction and magnitude of the deviation variation rather than the direction and magnitude of the deviation itself. Differential control is used to control the feedback signal variation based on the variation trend. Differential regulator should be used with caution as it may easily enlarge the system interferences, especially those with high variation frequency.

When frequency command selection (P00.06, P00. 07) is 7, or channel of voltage setup (P04.27) is 6, the running mode of Inverter is process PID control.

5.5.15.1 General procedures for PID parameter setup

a. Determining proportional gain P

When determining proportional gain P, first, remove the integral term and derivative term of PID by making Ti=0 and Td=0 (see PID parameter setup for details), thus turning PID into pure proportional control. Set the input to 60%–70% of the max. allowable value, and increase proportional gain P gradually from 0 until system oscillation occurred, and then in turn, decrease proportional gain P gradually from current value until system oscillation disappears, record the proportional gain P at this point and set the proportional gain P of PID to 60%–70% of current value. This is whole commissioning process of proportional gain P.

b. Determine integral time Ti

After proportional gain P is determined, set the initial value of a larger integral time Ti, and decrease Ti gradually until system oscillation occurred, and then in turn, increase Ti until system oscillation disappears, record the Ti at this point, and set the integral time constant Ti of PID to 150%–180% of current value. This is the commissioning process of integral time constant Ti.

c. Determining derivative time Td

The derivative time Td is generally set to 0.

If users need to set Td to another value, set in the same way with P and Ti, namely set Td to 30% of the value when there is no oscillation.

d. Empty system load, perform load-carrying joint debugging, and then fine-tune PID parameter until fulfilling the requirement.

5.5.15.2 How to fine-tune PID

After setting the parameters controlled by PID, users can fine-tune these parameters by the following means.

Control overmodulation: When overmodulation occurred, shorten the derivative time (Td) and prolong integral time (Ti).

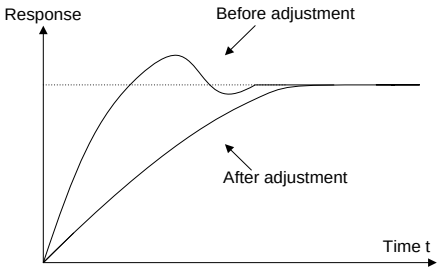

Stabilize the feedback value as fast as possible: when overmodulation occurred, shorten integral time (Ti) and prolong derivative time (Td) to stabilize control as fast as possible.

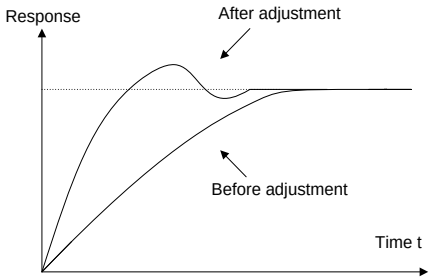

Control long-term vibration: If the cycle of periodic vibration is longer than the set value of integral time (Ti), it indicates the integral action is too strong, prolong the integral time (Ti) to control vibration.

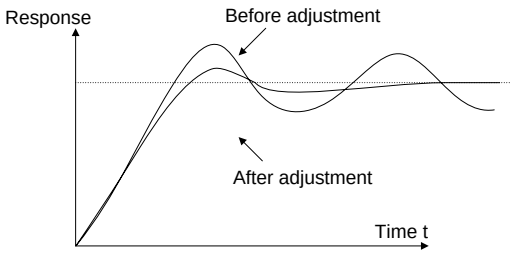

Control short-term vibration: If the vibration cycle is short is almost the same with the set value of derivative time (Td), it indicates derivative action is too strong, shorten the derivative time (Td) to control vibration. When derivative time (Td) is set to 0.00 (namely no derivative control), and there is no way to control vibration, decrease the proportional gain.

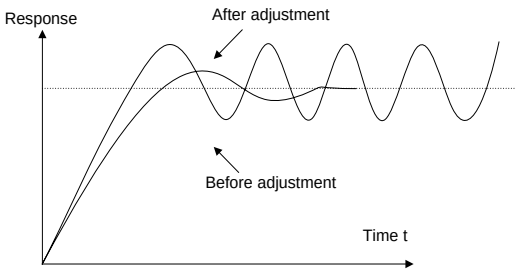

Related parameter list:

Function code	Name	Description	Default value
P09.00	PID reference source	0: Set by P09.01 1: AI1 2: AI2 3: AI3	0

Function code	Name	Description	Default value
		4: High-speed pulse HDIA 5: Multi-step 6: Modbus/Modbus TCP communication 7: PROFIBUS/CANopen/DeviceNet communication 8: Ethernet communication 9: High-speed pulse HDIB 10: EtherCAT/PROFINET/EtherNet IP communication 11: Programmable expansion card 12: Reserved	
P09.01	PID digital setting	-100.0%–100.0%	0.0%
P09.02	PID feedback source	0: AI1 1: AI2 2: AI3 3: High-speed pulse HDIA 4: Modbus/Modbus TCP communication 5: PROFIBUS/CANopen/DeviceNet communication 6: Ethernet communication 7: High-speed pulse HDIB 8: EtherCAT/PROFINET/EtherNet IP communication 9: Programmable expansion card 10: Reserved	0
P09.03	PID output characteristics	0: PID output is positive characteristic 1: PID output is negative characteristic	0
P09.04	Proportional gain (Kp)	0.00–100.00	1.80
P09.05	Integral time (Ti)	0.01–10.00s	0.90s
P09.06	Differential time (Td)	0.00–10.00s	0.00s
P09.07	Sampling cycle (T)	0.000–10.000s	0.100s
P09.08	Limit of PID control deviation	0.0–100.0%	0.0%
P09.09	Upper limit value of PID output	P09.10–100.0% (max. frequency or voltage)	100.0%
P09.10	Lower limit value of PID output	-100.0%–P09.09 (max. frequency or voltage)	0.0%
P09.11	Feedback offline detection value	0.0–100.0%	0.0%
P09.12	Feedback offline detection time	0.0–3600.0s	1.0s
P09.13	PID control selection	0x0000–0x1111 Ones: 0: Continue integral control after the frequency reaches upper/lower limit 1: Stop integral control after the	0x0001

Function code	Name	Description	Default value
		frequency reaches upper/lower limit Tens: 0: The same with the main reference direction 1: Contrary to the main reference direction Hundreds: 0: Limit as per the max. frequency 1: Limit as per A frequency Thousands: 0: A+B frequency, acceleration /deceleration of main reference A frequency source buffering is invalid 1: A+B frequency, acceleration/ deceleration of main reference A frequency source buffering is valid, acceleration/deceleration is determined by P08.04 (acceleration time 4).	
P09.14	Low frequency proportional gain (Kp)	0.00–100.00	1.00
P09.15	ACC/DEC time of PID command	0.0–1000.0s	0.0s
P09.16	PID output filter time	0.000–10.000s	0.000s
P09.17	Reserved	/	/
P09.18	Low frequency integral time (Ti)	0.00–10.00s	0.90s
P09.19	Low frequency differential time (Td)	0.00–10.00s	0.00s
P09.20	Low frequency point for PID parameter switching	0.00–P09.21	5.00Hz
P09.21	High frequency point for PID parameter switching	P09.20–P00.04	10.00Hz
P17.00	Set frequency	0.00Hz–P00.03 (max. output frequency)	0.00Hz
P17.23	PID reference value	-100.0–100.0%	0.0%
P17.24	PID feedback value	-100.0–100.0%	0.0%

5.5.16 Run at wobbling frequency

Wobbling frequency is mainly applied in cases where transverse movement and winding functions are needed like textile and chemical fiber industries. The typical working process is shown as below.

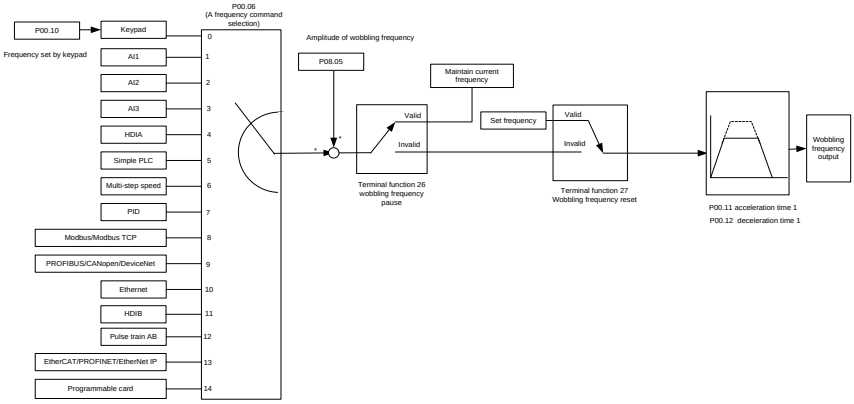

Function code	Name	Description	Default value
P00.03	Max. output frequency	P00.03–590.00Hz	50.00Hz
P00.06	A frequency command selection	0: Set via keypad 1: Set via AI1 2: Set via AI2 3: Set via AI3 4: Set via high speed pulse HDIA 5: Set via simple PLC program 6: Set via multi-step speed running 7: Set via PID control 8: Set via Modbus/Modbus TCP communication 9: Set via PROFIBUS/CANopen/ DeviceNet communication 10: Set via Ethernet communication 11: Set via high speed pulse HDIB 12: Set via pulse string AB 13: Set via EtherCAT/PROFINET/EtherNet IP communication 14: Set via PLC card	0
P00.11	Acceleration time 1	0.0–3600.0s	Depend on model
P00.12	Deceleration time 1	0.0–3600.0s	Depend on model
P05.01–P05.06	Digital input function selection	26: Wobbling frequency pause (stop at current frequency) 27: Wobbling frequency reset (revert to center frequency)	/
P08.15	Amplitude of wobbling	0.0–100.0% (relative to set frequency)	0.0%

Function code	Name	Description	Default value
	frequency		
P08.16	Amplitude of jump frequency	0.0–50.0% (relative to amplitude of wobbling frequency)	0.0%
P08.17	Wobbling frequency rise time	0.1–3600.0s	5.0s
P08.18	Wobbling frequency fall time	0.1–3600.0s	5.0s

5.5.17 Local encoder input

The S1 IP55 series Inverter supports pulse count function by inputting the count pulse from HDI high-speed pulse port. When the actual count value is no less than the set value, digital output terminal will output count-value-reached pulse signal, and the corresponding count value will be zeroed out.

Function code	Name	Description	Default value
P05.00	HDI input type	0x00–0x11 Ones: HDIA input type 0: HDIA is high-speed pulse input 1: HDIA is digital input Tens: HDIB input type 0: HDIB is high-speed pulse input 1: HDIB is digital input	0x00
P05.38	HDIA high-speed pulse input function	0: Set input via frequency 1: Reserved 2: Input via encoder, used in combination with HDIB	0
P05.44	HDIB high-speed pulse input function selection	0: Set input via frequency 1: Reserved 2: Input via encoder, used in combination with HDIA	0
P20.15	Speed measurement mode	0: PG card 1: local; realized by HDIA and HDIB; supports incremental 24V encoder only	0
P18.00	Actual frequency of encoder	-999.9–3276.7Hz	0.0Hz

5.5.18 Commissioning procedures for closed-loop control, position control and spindle positioning

1. Commissioning procedures for closed-loop vector control of asynchronous motor

Step 1: Restore to default value via keypad

Step 2: Set P00.03, P00.04 and P02 group motor nameplate parameters

Step 3: Motor parameter autotuning

Carry out rotary parameter autotuning or static parameter autotuning via keypad, if the motor can be disconnected from load, then it is users can carry out rotary parameter autotuning; otherwise, carry out static parameter autotuning, the parameter obtained from autotuning will be saved in P02 motor parameter group automatically.

Step 4: Verify whether the encoder is installed and set properly

a) Confirm the encoder direction and parameter setup

Set P20.01 (encoder pulse-per-revolution), set P00.00=2 and P00.10=20.00Hz, and run the Inverter, at this point, the motor rotates at 20Hz, observe whether the speed measurement value of P18.00 is correct, if the value is negative, it indicates the encoder direction is reversed, under such situation, set P20.02 to 1; if the speed measurement value deviates greatly, it indicates P20.01 is set improperly. Observe whether P18.02 (encoder Z pulse count value) fluctuates, if yes, it indicates the encoder suffers interference or P20.01 is set improperly, requiring users to check the wiring and the shielding layer.

b) Determine Z pulse direction

Set P00.10=20.00Hz, and set P00.13 (running direction) to forward and reverse direction respectively to observe whether the difference value of P18.02 is less than 5, if the difference value remains to be larger than 5 after setting Z pulse reversal function of P20.02, power off and exchange phase A and phase B of the encoder, and then observe the difference between the value of P18.02 during forward and reverse rotation. Z pulse direction only affects the forward/reverse positioning precision of the spindle positioning carried out with Z pulse.

Step 5: Closed-loop vector pilot-run

Set P00.00=3, and carry out closed-loop vector control, adjust P00.10 and speed loop and current loop PI parameter in P03 group to make it run stably in the whole range.

Step 6: Flux-weakening control

Set flux-weakening regulator gain P03.26=0–8000, and observe the flux-weakening control effect. P03.22–P03.24 can be adjusted as needed.

2. Commissioning procedures for closed-loop vector control of synchronous motor

Step 1: Set P00.18=1, restore to default value

Step 2: Set P00.00=3 (VC), set P00.03, P00.04, and motor nameplate parameters in P02 group.

Step 3: Set P20.01 encoder parameters

When the encoder is resolver-type encoder, set the encoder pulse count value to (resolver pole pair number × 1024), eg, if pole pair number is 4, set P20.01 to 4096.

Step 4: Ensure the encoder is installed and set correctly

When motor stops, observe whether P18.21 (resolver angle) fluctuates, if it fluctuates sharply, check the wiring and grounding. Rotates the motor slowly, observe whether P18.21 changes accordingly, and if yes, it indicates motor is connected correctly; if the value of P18.02 keeps constant at a non-zero value after rotating for multiple circles, it indicates encoder Z signal is correct.

Step 5: Autotuning of initial position of magnetic pole

Set P20.11=2 or 3 (3: rotary autotuning; 2: static autotuning), press RUN key to run the Inverter.

a) Rotary autotuning (P20.11 = 3)

Detect the position of current magnetic pole when autotuning starts, and then accelerates to 10Hz, autotuning corresponding magnetic pole position of encoder Z pulse, and decelerate to stop.

During running, if ENC1o or ENC1d fault occurred, set P20.02=1 and carry out autotuning again.

After autotuning is done, the angle obtained from autotuning will be saved in P20.09 and P20.10 automatically.

b) Static autotuning

In cases where the load can be disconnected, it is recommended to adopt rotary autotuning (P20.11=3) as it has high angle precision. If the load cannot be disconnected, users can adopt static autotuning (P20.11=2). The magnetic pole position obtained from autotuning will be saved in P20.09 and P20.10.

Step 6: Closed-loop vector pilot-run

Adjust P00.10 and speed loop and current loop PI parameter in P03 group to make it run stably in the whole range. If oscillation occurred, reduce the value of P03.00, P03.03, P03.09 and P03.10. If current oscillation noise occurred during low speed, adjust P20.05.

Note: It is necessary to re-determine P20.02 (encoder direction) and carry out magnetic pole position autotuning again if the wiring of motor or encoder is changed.

3. Commissioning procedures for pulse train control

Pulse input is operated based on closed-loop vector control; speed detection is needed in the subsequent spindle positioning, zeroing operation and division operation.

Step 1: Restore to default value by keypad

Step 2: Set P00.03, P00.04 and motor nameplate parameters in P02 group

Step 3: Motor parameter autotuning: rotary parameter autotuning or static parameter autotuning

Step 4: Verity the installation and settings of encoder. Set P00.00=3 and P00.10=20.00Hz to run the system, and check the control effect and performance of the system.

Step 5: Set P21.00=0001 to set positioning mode to position control, namely pulse-string control. There are four kinds of pulse command modes, which can be set by P21.01 (pulse command mode).

Under position control mode, users can check high bit and low bit of position reference and feedback, P18.02 (count value of Z pulse), P18.00 (actual frequency of encoder), P18.17 (pulse command frequency) and P18.19 (position regulator output) via P18, through which users can figure out the relation between P18.8 (position of position reference point) and P18.02, pulse command frequency P18.17, pulse command feedforward P18.18 and position regulator output P18.19.

Step 6: The position regulator has two gains, namely P21.02 and P21.03, and they can be switched by speed command, torque command and terminals.

Step 7: When P21.08 (output limit of position controller) is set to 0, the position control will be invalid, and at this point, the pulse train acts as frequency source, P21.13 (position feedforward gain) should be set to 100%, and the speed acceleration/deceleration time is

determined by the acceleration /deceleration time of pulse train, the pulse train acceleration/deceleration time of the system can be adjusted. If the pulse train acts as the frequency source in speed control, users can also set P21.00 to 0000, and set the frequency source reference P00.06 or P00.07 to 12 (set by pulse train AB), at this point, the acceleration/deceleration time is determined by the acceleration/deceleration time of the Inverter, meanwhile, the parameters of pulse train AB is still set by P21 group. In speed mode, the filter time of pulse train AB is determined by P21.29.

Step 8: The input frequency of pulse train is the same with the feedback frequency of encoder pulse, the relation between them can be changed by altering P21.11 (numerator of position command ratio) and P21.12 (denominator of position command ratio)

Step 9: When running command or servo enabling is valid (by setting P21.00 or terminal function 63), it will enter pulse train servo running mode.

4. Commissioning procedures for spindle positioning

Spindle orientation is to realize orientation functions like zeroing and division based on closed-loop vector control

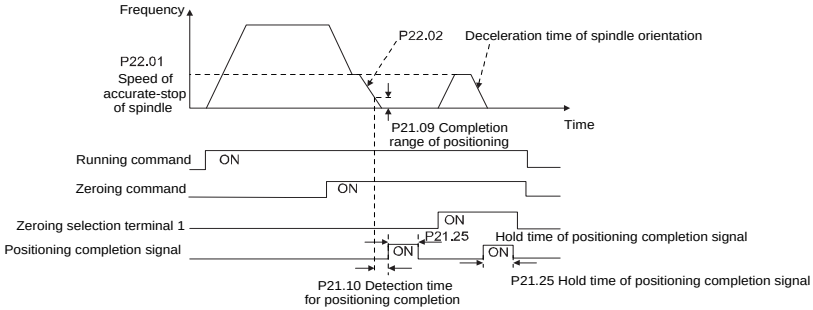

Step 1–4: These four steps are the same with the first four steps of the commissioning procedures for closed-loop vector control, which aim to fulfill the control requirements of closed-loop vector control, thus realizing spindle positioning function in either position control or speed control mode.

Step 5: Set P22.00.bit0=1 to enable spindle positioning, set P22.00.bit1 to select spindle zero input. If the system adopts encoder for speed measurement, set P22.00.bit1 to 0 to select Z pulse input; if the system adopts photoelectric switch for speed measurement, set P22.00.bit1 to 1 to select photoelectric switch as zero input; set P22.00.bit2 to select zero search mode, set P22.00.bit3 to enable or disable zero calibration, and select zero calibration mode by setting P22.00.bit7.

Step 6: Spindle zeroing operation

a) Select the positioning direction by setting P22.00.bit4;

b) There are four zero positions in P22 group, users can choose one out of four zeroing positions by setting zeroing input terminal selection (46, 47) in P05 group. When executing zeroing function, the motor will stop accurately at corresponding zeroing position according to the set positioning direction, which can be viewed via P18.10;

c) The positioning length of spindle zeroing is determined by the deceleration time of accurate-stop and the speed of accurate-stop;

Step 7: Spindle division operation

There are seven scale-division positions in P22 group, users can choose one out of seven scale-division positions by setting scale-division input terminal selection (48, 49, 50) in P05 group. Enable corresponding scale-division terminal after the motor stops accurately, and the motor will check the scale-division position state and switch to corresponding position incrementally, at this point, users can check P18.09.

Step 8: Priority level of speed control, position control and zeroing

The priority level of speed running is higher than that of the scale division, when the system runs in scale-division mode, if spindle orientation is prohibited, the motor will turn to speed mode or position mode.

The priority level of zeroing is higher than that of the scale division.

Scale-division command is valid when the scale-division terminal is from 000 state to non-000 state, eg, in 000–011, the spindle executes scale division 3. The transition time during terminal switch-over needs to be less than 10ms; otherwise, wrong scale division command may be executed.

Step 9: Hold positioning

The position loop gain during positioning is P21.03; while the position loop gain in positioning-completion-hold state is P21.02. In order to keep sufficient position-hold force and ensure no system oscillation occurred, adjust P03.00, P03.01, P20.05 and P21.02.

Step 10: Positioning command selection (bit6 of P22.00)

Electric level signal: Positioning command (zeroing and scale division) can be executed only when there is running command or the servo is enabled.

Step 11: Spindle reference point selection (bit0 of P22.00)

Encoder Z pulse positioning supports the following spindle positioning modes:

a) the encoder is installed on the motor shaft, the motor shaft and spindle is 1:1 rigid connection;

b) the encoder is installed on the motor shaft, the motor shaft and spindle is 1:1 belt connection;

At this point, the belt may slip during high-speed running and cause inaccurate positioning, it is recommended to install proximity switch on the spindle.

c) The encoder is installed on the spindle, and the motor shaft is connected to the spindle with belt, the drive ratio is not necessarily 1:1;

At this point, set P20.06 (speed ratio of the mounting shaft between motor and encoder), and set P22.14 (spindle drive ratio) to 1. As the encoder is not installed on the motor, the control performance of closed-loop vector will be affected.

Proximity switch positioning supports the following spindle positioning modes:

d) The encoder is installed on the motor shaft, the drive ratio between motor shaft and spindle is not necessarily 1:1;

At this point, it is required to set P22.14 (spindle drive ratio).

5. Commissioning procedures for digital positioning

The diagram for digital positioning is shown below.

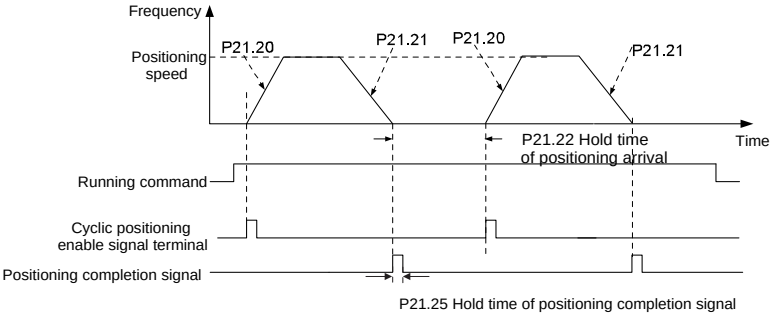

Step 1–4: These four steps are the same with the first four steps of the commissioning procedures for closed-loop vector control, which aim to fulfill the control requirements of closed-loop vector control.

Step 5: Set P21.00=0011 to enable digital positioning. Set P21.17, P21.11 and P21.12 (set positioning displacement) according to actual needs; set P21.18 and P21.19 (set positioning speed); set P21.20 and P21.21 (set acceleration/deceleration time of positioning).

Step 6: Single positioning operation

Set P21.16.bit1=0, and the motor will carry out single positioning action and stay in the positioning position according to the setup in step 5.

Step 7: Cyclic positioning operation

Set P21.16.bit1=1 to enable cyclic positioning. The cyclic positioning is divided into continuous mode and repetitive mode; users can also carry out cyclic positioning through terminal function (no. 55, enable digital positioning cycle)

6. Commissioning procedures for positioning of photoelectric switch

Photoelectric switch positioning is to realize positioning function based on closed-loop vector control.

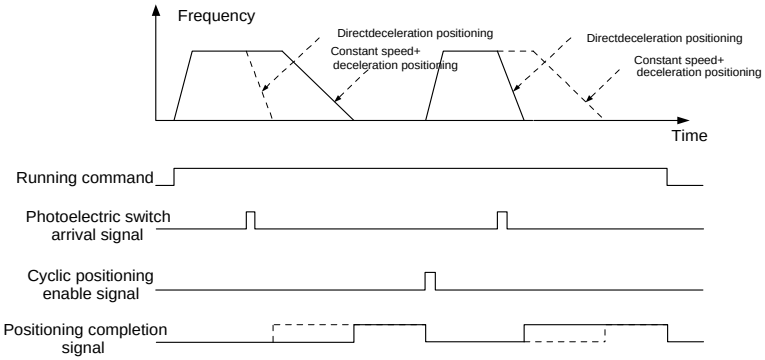

Step 1–4: These four steps are the same with the first four steps of the commissioning procedures for closed-loop vector control, which aim to fulfill the control requirements of

closed-loop vector control.

Step 5: Set P21.00=0021 to enable photoelectric switch positioning, the photoelectric switch signal can be connected to S8 terminal only, and set P05.08=43, meanwhile, set P21.17, P21.11 and P21.12 (set positioning displacement) based on actual needs; set P21.21 (deceleration time of positioning), however, when present running speed is too fast or the set positioning displacement is too small, the deceleration time of positioning will be invalid, and it will enter direct deceleration positioning mode.

Step 6: Cyclic positioning

After positioning is done, the motor will stay in current position. Users can set cyclic positioning through input terminal function selection (55: enable cyclic digital positioning) in P05 group; when the terminal receives cyclic positioning enable signal (pulse signal), the motor will continue running in the set speed as per the speed mode and re-enter positioning state after encountering photoelectric switch.

(7) Hold positioning

The position loop gain during positioning is P21.03; while the position loop gain in positioning-completion-hold state is P21.02. In order to keep sufficient position-hold force and ensure no system oscillation occurred, adjust P03.00, P03.01, P20.05 and P21.02.

5.5.19 Fault handling

The following provides fault handling information.

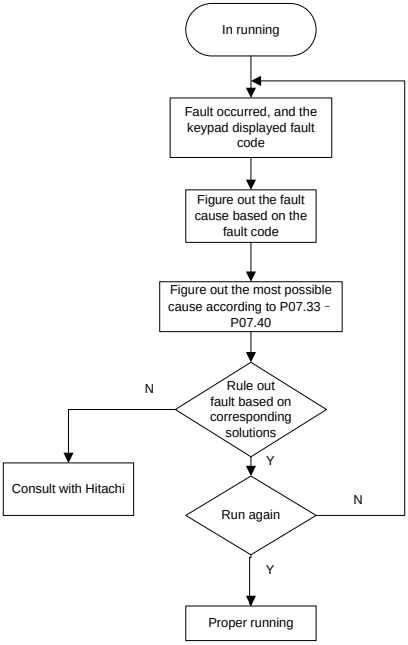

Related parameter list:

Function code	Name	Description	Default value
P07.27	Type of present fault	0: No fault 1: Inverter unit U phase protection (OUt1) 2: Inverter unit V phase protection (OUt2) 3: Inverter unit W phase protection (OUt3) 4: Overcurrent during acceleration (OC1) 5: Overcurrent during deceleration (OC2) 6: Overcurrent during constant speed (OC3) 7: Overvoltage during acceleration (OV1) 8: Overvoltage during deceleration (OV2) 9: Overvoltage during constant speed (OV3) 10: Bus undervoltage fault (UV) 11: Motor overload (OL1) 12: Inverter overload (OL2) 13: Phase loss on input side (SPI) 14: Phase loss on output side (SPO) 15: Rectifier module overheat (OH1) 16: Inverter module overheat (OH2) 17: External fault (EF) 18: Modbus/Modbus TCP communication fault (CE) 19: Current detection fault (ItE) 20: Motor autotuning fault (tE) 21: EEPROM operation fault (EEP) 22: PID feedback offline fault (PIDE) 23: Brake unit fault (bCE) 24: Running time reached (END) 25: Electronic overload (OL3) 26: Keypad communication error (PCE) 27: Parameter upload error (UPE) 28: Parameter download error (DNE) 29: PROFIBUS DP communication fault (E-DP) 30: Ethernet communication fault (E-NET) 31: CANopen communication fault (E-CAN) 32: To-ground short-circuit fault 1 (ETH1) 33: To-ground short-circuit fault 2 (ETH2) 34: Speed deviation fault (dEu) 35: Mal-adjustment fault (STo)	0
P07.28	Type of the last fault		/
P07.29	Type of the last but one fault		/
P07.30	Type of the last but two fault		/
P07.31	Type of the last but three fault		/
P07.32	Type of the last but four fault		

Function code	Name	Description	Default value
		36: Underload fault (LL) 37: Encoder offline fault (ENC1o) 38: Encoder reversal fault (ENC1d) 39: Encoder Z pulse offline fault (ENC1Z) 40: Safe torque off (STO) 41: Channel H1 safety circuit exception (STL1) 42: Channel H2 safety circuit exception (STL2) 43: Channel H1 and H2 exception (STL3) 44: Safety code FLASH CRC check fault (CrCE) 45: Programmable card customized fault 1 (P-E1) 46: Programmable card customized fault 2 (P-E2) 47: Programmable card customized fault 3 (P-E3) 48: Programmable card customized fault 4 (P-E4) 49: Programmable card customized fault 5 (P-E5) 50: Programmable card customized fault 6 (P-E6) 51: Programmable card customized fault 7 (P-E7) 52: Programmable card customized fault 8 (P-E8) 53: Programmable card customized fault 9 (P-E9) 54: Programmable card customized fault 10 (P-E10) 55: Repetitive expansion card type fault (E-Err) 56: Encoder UVW loss fault (ENCUV) 57: PROFINET communication timeout fault (E-PN) 58: CAN communication fault (SECAN) 59: Motor over-temperature fault (OT) 60: Card slot 1 card identification failure (F1-Er) 61: Card slot 2 card identification failure (F2-Er) 62: Card slot 3 card identification failure (F3-Er) 63: Card slot 1 card communication	

Function code	Name	Description	Default value
		timeout fault (C1-Er) 64: Card slot 2 card communication timeout fault (C2-Er) 65: Card slot 3 card communication timeout fault (C3-Er) 66: EtherCAT communication fault (E-CAT) 67: Bacnet communication fault (E-BAC) 68: DeviceNet communication fault (E-DEV) 69: Master-slave synchronous CAN slave fault (S-Err) 70: EC PT100 detected overheating (OtE1) 71: EC PT1000 detected overheating (OtE2) 72: EtherNet/IP communication timeout (E-EIP) 73: No upgrade bootload (E-PAO) 74: AI1 disconnected (E-AI1) 75: AI2 disconnected (E-AI2) 76: AI3 disconnected (E-AI3)	
P07.33	Running frequency at present fault	0.00Hz–P00.03	0.00Hz
P07.34	Ramps reference frequency at present fault	0.00Hz–P00.03	0.00Hz
P07.35	Output voltage at present fault	0–1200V	0V
P07.36	Output current at present fault	0.0–6300.0A	0.0A
P07.37	Bus voltage at present fault	0.0–2000.0V	0.0V
P07.38	Max. temperature at present fault	-20.0–120.0°C	0.0°C
P07.39	Input terminal state at present fault	0x0000–0xFFFF	0
P07.40	Output terminal state at present fault	0x0000–0xFFFF	0
P07.41	Running frequency at the last fault	0.00Hz–P00.03	0.00Hz
P07.42	Ramps reference frequency at the last fault	0.00Hz–P00.03	0.00Hz
P07.43	Output voltage at the last fault	0–1200V	0V
P07.44	Output current at the last fault	0.0–6300.0A	0.0A
P07.45	Bus voltage at the last fault	0.0–2000.0V	0.0V

Function code	Name	Description	Default value
P07.46	Max. temperature at the last fault	-20.0–120.0°C	0.0°C
P07.47	Input terminal state at the last fault	0x0000–0xFFFF	0
P07.48	Output terminal state at the last fault	0x0000–0xFFFF	0
P07.49	Running frequency at the last but one fault	0.00Hz–P00.03	0.00Hz
P07.50	Ramps reference frequency at the last but one fault	0.00Hz–P00.03	0.00Hz
P07.51	Output voltage at the last but one fault	0–1200V	0V
P07.52	Output current at the last but one fault	0.0–6300.0A	0.0A
P07.53	Bus voltage at the last but one fault	0.0–2000.0V	0.0V
P07.54	Max. temperature at the last but one fault	-20.0–120.0°C	0.0°C
P07.55	Input terminal state at the last but one fault	0x0000–0xFFFF	0
P07.56	Output terminal state at the last but one fault	0x0000–0xFFFF	0

5.5.20 Tension control solutions

In many fields of industrial production, precise tension control is needed to maintain a constant output tension of the drive equipment, in order to improve the quality of the products. In the winding and unwinding of some industries such as paper processing, printing and dyeing, packing, wire and cable manufacturing, textile, fiber, optic cable, leather, metal foil material processing and so on, tension needs to keep constant.

The Inverter controls the tension by regulating the motor output torque or speed. There are three modes to control the tension: speed mode, open-loop torque mode and closed-loop torque mode.

5.5.20.1 Typical tension control applications for winding/unwinding

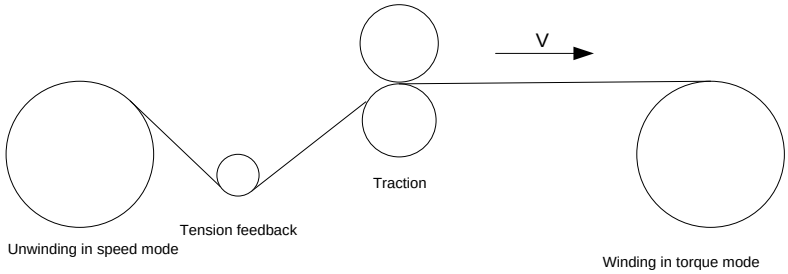

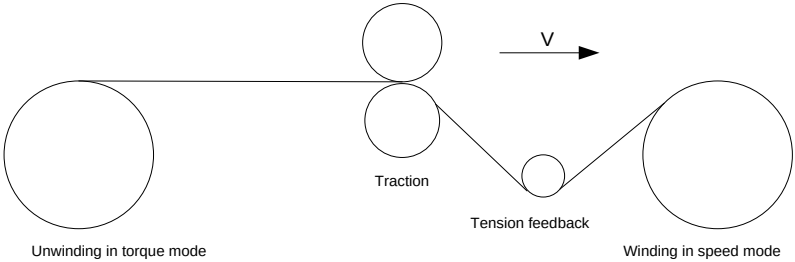

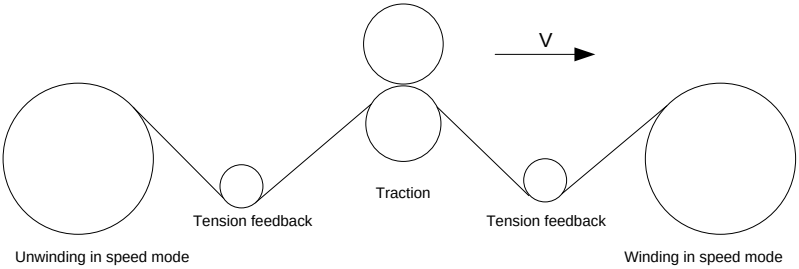

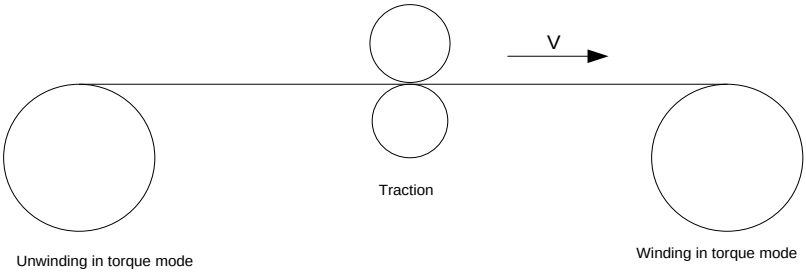

In some special situations, if the roll diameter can be counted through thickness, the following applications can be implemented:

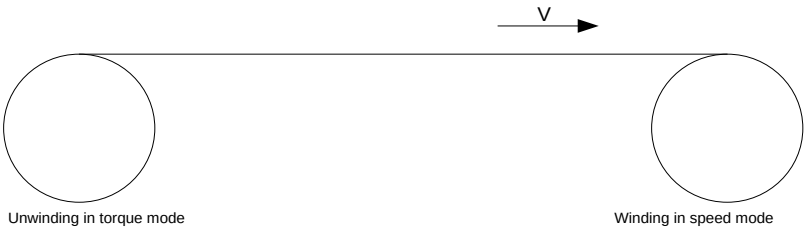

5.5.20.2 Speed control

The detection feedback signal is needed in the closed-loop adjustment. PID calculation is carried out according to the feedback signal for the motor speed regulation, linear speed and stable tension control. If the tension rocker or floating roller is used for feedback, changing the set value (PID reference) may change the actual tension, and at the same time, changing the mechanical configuration such as the tension rocker or floating roller weight can also change the tension.

The control principle is as follows.

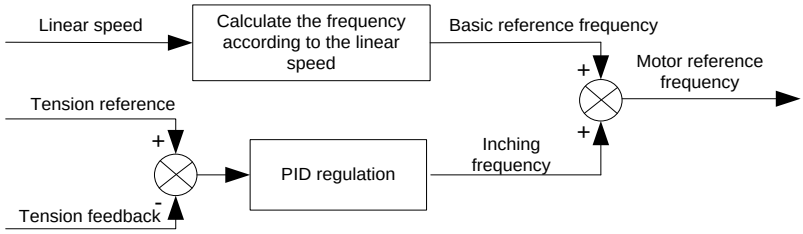

Related modules:

(1) Linear speed input module: It is important for the calculation of the basic setting frequency according to the linear speed and the calculation of roll diameter according to the linear speed.

(2) Real-time roll diameter calculation module: The calculation accuracy of roll diameter determines the control performance. The roll diameter can be calculated according to the

Inverter output frequency and the linear speed. In addition, it can also be calculated through the thickness or sensor. The linear speed is widely used for the calculation. If the set linear speed is used for the calculation, you choose whether to enable the function of roll diameter change limiting.

(3) PID regulation module: There are two groups of PID parameters in P09. The linear speed synchronization and stable tension can be kept through PID regulation. PID parameters can be modified based on site commissioning. The two groups of PID parameters can be switched for PID regulation improvement.

(4) Material feeding interrupt detection and processing module: The function is valid when material feeding interrupt detection has been enabled.

(5) Pre-drive: This function is applied to automatic reel change. After the Inverter is started if the pre-drive function terminal is valid, the roller runs at the set linear speed. When the terminal is invalid, the Inverter will automatically switch to the corresponding control mode after a period of time.

5.5.20.3 Open-loop torque mode

Open loop means there is no tension feedback signal. In this mode, stable tension can be achieved by means of motor torque control. The rotation speed automatically changes with the linear speed of material. The control basis is as follows: For a reel control system, the relationship between the tension F of the roller with materials, present roll diameter D and output torque of the shaft is: T = F × D /2. If the output torque can be adjusted according to the variation of roll diameter, the tension can be controlled. In order to ensure the constant tension in the process of acceleration and deceleration, the internal friction compensation module and inertia compensation module have been built in the Inverter to calculate the real time rotation inertia, and compensate the torque according to the actual speed change rate. The control principle is shown in the following figure.

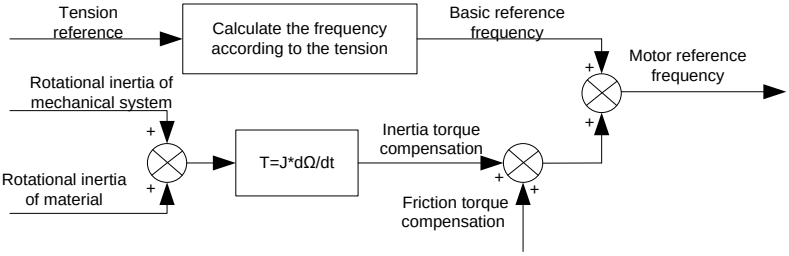

Relevant modes:

(1) Linear speed input module: It has two functions: calculating the synchronous frequency in torque control according to the linear speed, and calculating the roll diameter according to the linear speed.

(2) Tension setting module: Used to set the tension adapting to the control system. It needs to be adjusted according to the actual situation. After confirmation, the value remains the same. In some scenarios where the forming effect after winding needs to be improved, the tension taper function can be used so that the tension decreases as the roll diameter increases.

(3) Real-time roll diameter calculation module: The calculation accuracy of roll diameter determines the control performance. The roll diameter can be calculated according to the

Inverter output frequency and the linear speed. In addition, it can also be calculated through the thickness or sensor. The linear speed is widely used for the calculation. If the set linear speed is used for the calculation, you choose whether to enable the function of roll diameter change limiting.

(4) Torque compensation module: Torque compensation includes friction torque compensation and inertia torque compensation. Friction torque compensation is used to eliminate the impact of friction on tension, and it needs to be adjusted according to actual requirements. Rotation inertia includes inertial of mechanical systems and that of materials. In order to keep the tension stable in ACC/DEC, compensation torque is required. In some cases without strict tension control requirements, disabling rotation inertia torque compensation can also achieve the control.

(5) Material feeding interrupt detection and processing module: The function is valid when material feeding interrupt detection has been enabled.

(6) This function is applied to automatic reel change. After the Inverter is started if the pre-drive function terminal is valid, the roller runs at the set linear speed. When the terminal is invalid, the Inverter will automatically switch to the corresponding control mode after a period of time.

5.5.20.4 Closed-loop torque mode

Similar to the open-loop torque mode, the closed-loop torque mode has only the difference that tension detection sensors are installed on the winding/unwinding side. In addition to all the function modules supported in open-loop torque mode, this mode supports an additional tension feedback PID closed-loop regulation module. The control principle is shown in the following figure.

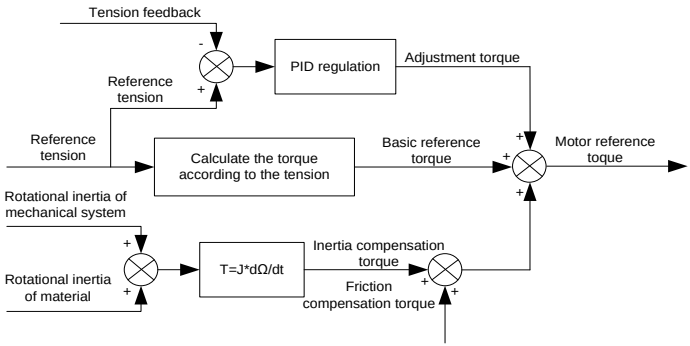

6 Function parameter list

6.1 What this chapter contains

This chapter lists all the function codes and corresponding description of each function code.

6.2 Function parameter list

Function parameters of the S1 IP55 series Inverter are categorized according to functions. Among the function groups, P98 is analog input/output calibration group, and P99 is factory function group which cannot be accessed by users. The function code adopts three-level menu, eg, "P08.08" indicates it is the no. 8 function code in P8 group.

The function group no. corresponds to the first-level menu; function code no. corresponds to the second-level menu; function code parameter corresponds to the third-level menu.

1. The function list is divided into the following columns:

Column 1 "Function code": number of the function parameter group and the parameter;

Colum 2 "Name": complete name of the function parameter;

Colum 3 "Description": detailed description of this function parameter;

Colum 4 "Default value": The original set value of the function parameter by default;

Colum 5: "Modify": The modification attribute of the function parameter, namely whether the function parameter can be modified and the condition for modification, as shown below.

"○": the set value of this parameter can be modified when the Inverter is in stop or running state;

"◎": the set value of this parameter cannot be modified when the Inverter is in running state;

"●": the parameter value is the measured value which cannot be modified.

(The Inverter has assigned the modification attribute of each parameter automatically to avoid inadvertent modification by users.)

2. "System of numeration for parameters" is decimalism; if the parameter is presented in hexadecimal numbers, the data of each bit will be independent of each other during parameter edit, and the value range of partial bits can be 0–F in hexadecimal system.

3. "Default value" is value restored after parameter refresh during restoring to default value; however, the measured value or recorded value will not be refreshed.

4. In order to enhance parameter protection, the Inverter provides password protection for the function codes. After setting user password (namely user password P07.00 is not zero), when users press PRG/ESC key to enter function code edit state, the system will first enter user password verification state which displays "0.0.0.0.0.", requiring operators to input the correct user password. For factory parameters, besides user password, it is also required to input the correct factory password (users should not attempt to modify factory parameters as improper setup may easily lead to mal-operation or damage the Inverter). When password protection is unlocked, the user password can be modified at any time; user password is subject to the last input. User password can be cancelled by setting P07.00 to 0; if P01.00 is set to a non-zero value, the parameter will be protected by password. When modifying function parameters through serial communication, the function of user password also follows above rules.

P00 group—Basic functions

Function code	Name	Description	Default value	Modify
P00.00	Speed control mode	0: Sensorless vector control (SVC) mode 0 1: SVC 1 2: SVPWM 3: FVC **Note:** To select 0, 1, or 3 as the control mode, enable the Inverter to perform motor parameter autotuning first.	2	◎
P00.01	Running command channel	0: Keypad 1: Terminal 2: Communication	0	○
P00.02	Communication mode of running commands	0: Modbus/Modbus TCP 1: PROFIBUS/CANopen/DeviceNet 2: Ethernet 3: EtherCAT/PROFINET/EtherNet IP 4: Programmable card 5: Wireless communication card 6: Reserved **Note:** The Modbus TCP communication mode of option 0, and options 1, 2, 3, 4 and 5 are extended functions which are applicable with corresponding cards.	0	○
P00.03	Max. output frequency	Used to set the max. output frequency of the Inverter. It is the basis of frequency setting and the acceleration/deceleration. Setting range: Max (P00.04, 10.00) –590.00Hz	50.00Hz	◎
P00.04	Upper limit of running frequency	The upper limit of running frequency is upper limit value of Inverter output frequency. This value should be no more than the max. output frequency. When the set frequency is higher than the upper limit frequency, the Inverter runs at the upper limit frequency. Setting range: P00.05–P00.03 (max. output frequency)	50.00Hz	◎
P00.05	Lower limit of running frequency	The lower limit of running frequency is the lower limit value of Inverter output frequency. When the set frequency is lower than the lower limit frequency, the Inverter runs at the lower limit frequency. **Note:** Max. output frequency ≥ upper limit frequency ≥ lower limit frequency. Setting range: 0.00Hz–P00.04 (upper limit of running frequency)	0.00Hz	◎

Function code	Name	Description	Default value	Modify
P00.06	A frequency command selection	0: Keypad 1: AI1 2: AI2 3: AI3 4: High speed pulse HDIA 5: Simple PLC program 6: Multi-step speed running 7: PID control 8: Modbus/Modbus TCP communication 9: PROFIBUS/CANopen/DeviceNet communication 10: Ethernet communication 11: High speed pulse HDIB 12: Pulse train AB 13: EtherCAT/PROFINET/EtherNet IP communication 14: Programmable card 15: Reserved	0	○
P00.07	B frequency command selection		15	○
P00.08	Reference object of B frequency command	0: Max. output frequency 1: A frequency command	0	○
P00.09	Combination mode of setting source	0: A 1: B 2: (A+B) 3: (A-B) 4: Max. (A, B) 5: Min. (A, B)	0	○
P00.10	Set frequency via keypad	When A and B frequency commands are set by keypad, the value is the initial digital set value of the Inverter frequency. Setting range: 0.00 Hz–P00.03 (max. output frequency)	50.00Hz	○
P00.11	Acceleration time 1	Acceleration time is the time needed for accelerating from 0Hz to max. output frequency (P00.03).	Depend on model	○
P00.12	Deceleration time 1	Deceleration time is the time needed from decelerating from max. output frequency (P00.03) to 0Hz. The S1 IP55 high-ingress protection series Inverter defines four groups of acceleration and deceleration time, which can be selected via multi-function digital input terminals (P05 group). The acceleration/deceleration time of the Inverter is the first group by default. Setting range of P00.11 and P00.12: 0.0–3600.0s	Depend on model	○

<table>
<tr><th>Function code</th><th>Name</th><th>Description</th><th>Default value</th><th>Modify</th></tr>
<tr><td>P00.13</td><td>Running direction</td><td>0: Run in default direction
1: Run in reverse direction
2: Reverse running is prohibited</td><td>0</td><td>○</td></tr>
<tr><td>P00.14</td><td>Carrier frequency setting</td><td>
<table>
<tr><th>Carrier frequency</th><th>Electro magnetic noise</th><th>Noise and leakage current</th><th>Cooling level</th></tr>
<tr><td>1kHz</td><td rowspan="3">↑ High
↓ Low</td><td rowspan="3">↑ Low
↓ High</td><td rowspan="3">↑ Low
↓ High</td></tr>
<tr><td>10kHz</td></tr>
<tr><td>15kHz</td></tr>
</table>
The relation between the model and carrier frequency is shown below.
<table>
<tr><th colspan="2">Model</th><th>Default carrier frequency</th></tr>
<tr><td rowspan="3">400V</td><td>4 – 11kW</td><td>8kHz</td></tr>
<tr><td>15–55kW</td><td>4kHz</td></tr>
<tr><td>75kW and higher</td><td>2kHz</td></tr>
</table>
Advantages of high carrier frequency are as follows: ideal current waveform, few current harmonics and small motor noise.
Disadvantages of high carrier frequency are as follows: growing switch consumption, enlarged temperature raise, impacted output capacity; under high carrier frequency, the Inverter needs to be derated for use, meanwhile, the leakage current will increase, which increases electromagnetic interference to the surroundings.
While low carrier frequency is the contrary. Low carrier frequency will cause unstable operation at low frequency, decrease the torque, or even lead to oscillation.
The carrier frequency of Inverter is set properly by default, and it should not be changed by users at will.
If the default carrier frequency is exceeded during use, derating is required, derate by 10% for every additional 1k carrier frequency.
Setting range: 1.0–15.0kHz</td><td>Depend on model</td><td>○</td></tr>
<tr><td>P00.15</td><td>Motor parameter autotuning</td><td>0: No operation
1: Rotary autotuning 1; carry out comprehensive motor parameter autotuning; rotary autotuning is used in cases where high control precision is</td><td>0</td><td>◎</td></tr>
</table>

Function code	Name	Description	Default value	Modify
		required; 2: Static autotuning 1 (comprehensive autotuning); static autotuning 1 is used in cases where the motor cannot be disconnected from load; 3: Static autotuning 2 (partial autotuning) ; when current motor is motor 1, only P02.06, P02.07 and P02.08 will be autotuned; when current motor is motor 2, only P12.06, P12.07 and P12.08 will be autotuned. 4: Rotary autotuning 2, which is similar to rotary autotuning 1 but is only applicable to asynchronous motors. 5: Rotary autotuning 3 (partial autotuning), which is only applicable to asynchronous motors.		
P00.16	AVR function	0: Invalid 1: Valid during the whole process Automatic voltage regulation function is used to eliminate the impact on the output voltage of Inverter when bus voltage fluctuates.	1	○
P00.17	Inverter model	0: ND model 1: LD model	0	◎
P00.18	Function parameter restoration	0: No operation 1: Restore default value 2: Clear fault records 3: Reserved 4: Reserved 5: Restore default values (for factory test mode) 6: Restore default values (including motor parameters) **Note:** After the selected operation is performed, this parameter is automatically restored to 0. Restoring the default values may delete the user password. Exercise caution when using this function. The option 5 can be used only for factory testing.	0	◎

P01 group—Start/stop control

Function code	Name	Description	Default value	Modify
P01.00	Running mode of start	0: Direct start 1: Start after DC brake 2: Start after speed-tracking	0	◎

Function code	Name	Description	Default value	Modify
P01.01	Starting frequency of direct start	Starting frequency of direct startup is the initial frequency when the Inverter starts. See P01.02 (hold time of starting frequency) for details. Setting range: 0.00–50.00Hz	0.50Hz	◎
P01.02	Hold time of starting frequency	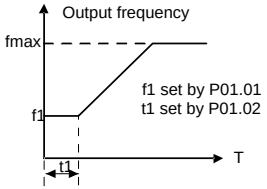 A proper starting frequency can increase the torque during startup. Within the hold time of starting frequency, the output frequency of Inverter is the starting frequency, and then it runs from the starting frequency to the target frequency, if the target frequency (frequency command) is below the starting frequency, the Inverter will be standby rather than running. The starting frequency value is unlimited by the lower limit frequency. Setting range: 0.0–50.0s	0.0s	◎
P01.03	DC brake current before start	During starting, the Inverter will first perform DC brake based on the set DC brake current before startup, and then it will accelerate after the set DC brake time before startup elapses. If the set DC brake time is 0, DC brake will be invalid. The larger the DC brake current, the stronger the brake force. The DC brake current before startup refers to the percentage relative to rated Inverter output current. Setting range of P01.03: 0.0–100.0% Setting range of P01.04: 0.00–50.00s	0.0%	◎
P01.04	DC brake time before start		0.00s	◎
P01.05	Acceleration/ deceleration mode	This function code is used to select the frequency variation mode during starting and running. 0: Straight line; the output frequency increases or decreases in straight line; 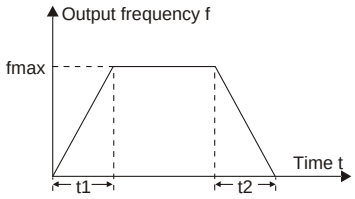	0	◎

Function code	Name	Description	Default value	Modify
		1: S curve; the output frequency increases or decreases in S curve; S curve is generally used in cases where smooth start/stop is required, such as elevator, conveyer belt, and so on. 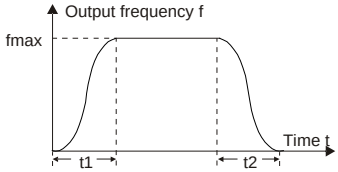 **Note:** When set to 1, it is required to set P01.06, P01.07, P01.27 and P01.28 accordingly.		
P01.06	Time of starting section of acceleration S curve	The curvature of S curve is determined by acceleration range and acceleration and deceleration time. 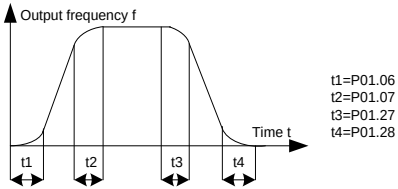 Setting range: 0.0–50.0s	0.1s	◎
P01.07	Time of ending section of acceleration S curve		0.1s	◎
P01.08	Stop mode	0: Decelerate to stop; after stop command is valid, the Inverter lowers output frequency based on the deceleration mode and the defined deceleration time, after the frequency drops to the stop speed (P01.15), the Inverter stops. 1: Coast to stop; after stop command is valid, the Inverter stops output immediately, and the load coasts to stop as per mechanical inertia.	0	○
P01.09	Starting frequency of DC braking after stop	Starting frequency of DC braking after stop; during decelerating to stop, when this frequency is reached, DC braking will be performed after stop. Demagnetization time (waiting time of DC braking after stop): Before the DC braking, the Inverter will block output, and after the demagnetization time elapses, DC braking will start. This function is used to prevent overcurrent fault caused by DC braking during high speed. DC braking current after stop: it means the DC braking force applied, the larger the current, the stronger the DC braking effect.	0.00Hz	○
P01.10	Waiting time of DC braking after stop		0.00s	○
P01.11	DC braking current of stop		0.0%	○
P01.12	DC braking time of stop		0.00s	○

Function code	Name	Description	Default value	Modify
		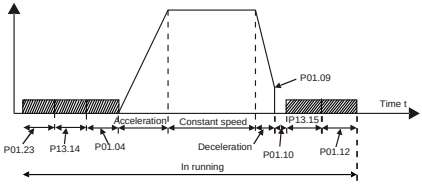 Setting range of P01.09: 0.00Hz–P00.03 (max. output frequency) Setting range of P01.10: 0.00–30.00s Setting range of P01.11: 0.0–100.0% (of the rated Inverter output current) Setting range of P01.12: 0.0–50.0s		
P01.13	Deadzone time of forward/reverse rotation	This function code refers to the transition time of the threshold set by P01.14 during setting forward/reverse rotation of the Inverter, as shown below. 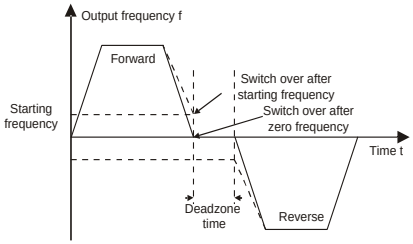 Setting range: 0.0–3600.0s	0.0s	○
P01.14	Forward/reverse rotation switch-over mode	0: Switch over after zero frequency 1: Switch over after starting frequency 2: Switch over after passing stop speed and delay	1	◎
P01.15	Stop speed	0.00–100.00Hz	0.50Hz	◎
P01.16	Stop speed detection mode	0: Set value of speed (the only detection mode valid in SVPWM mode) 1: Detection value of speed	0	◎
P01.17	Stop speed detection time	0.00–100.00s	0.50s	◎
P01.18	Terminal running protection at power-on	When the running command channel is controlled by terminals, the system will detect running terminal state automatically during power up. 0: Terminal running command is invalid during power up. The Inverter will not run during power up even if the running command terminal is detected to be valid, and the system is in running protection state. The Inverter will run	0	○

Function code	Name	Description	Default value	Modify
		only after this terminal is cancelled and enabled again. 1: Terminal running command is valid during power up. The system will start the Inverter automatically after initialization is done if the running command terminal is detected to be valid during power up. **Note:** This function must be set with caution; otherwise, serious consequences may occur.		
P01.19	Action selection when the running frequency is below lower limit (lower limit should be larger than 0)	This parameter specifies the running status of Inverter when the set frequency is below the lower limit. Setting range: 0x00–0x12 Ones place: Action selection 0: Run in lower limit of the frequency 1: Stop 2: Sleep Tens place: Stop mode 0: Coast to stop 1: Decelerate to stop The Inverter sleeps or stops in a way set in the tens place if the action selection is stop or sleep when the set frequency is lower than the lower limit. The Inverter resumes the running state automatically when the set frequency is above the lower limit again and this situation lasts for the time set by P01.20.	0x00	◎
P01.20	Wake-up-from-sleep delay	This parameter specifies the sleep delay. When the running frequency of Inverter is below the lower limit frequency, the Inverter enters sleep state; when the set frequency is above the lower limit again and continues to be so after the time set by P01.20 elapses, the Inverter will run automatically. 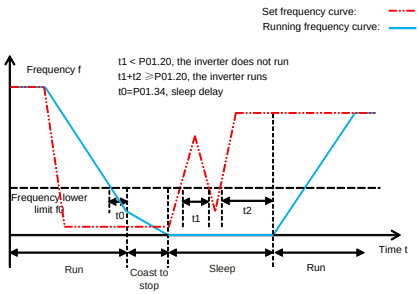 	0.0s	○

Function code	Name	Description	Default value	Modify
		Setting range: 0.0–3600.0s (valid when the ones place of P01.19 is 2)		
P01.21	Restart after power down	This parameter specifies the automatic running of the Inverter at next power-on after power down. 0: Disabled restart 1: Enable restart, namely the Inverter will run automatically after the time set by P01.22 elapses if the starting conditions are met.	0	○
P01.22	Waiting time of restart after power cut	This parameter specifies the waiting time before automatically running at next power-on after power down. 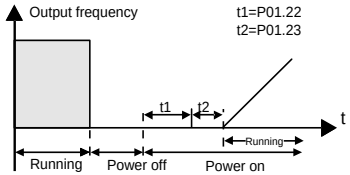 Setting range: 0.0–3600.0s (valid when P01.21 is 1)	1.0s	○
P01.23	Start delay	This parameter specifies the delay of the Inverter's wake-up-from-sleep after running command is given, the Inverter will start to run and output after the time set by P01.23 elapses to realize brake release. Setting range: 0.0–600.0s	0.0s	○
P01.24	Stop speed delay	0.0–600.0s	0.0s	○
P01.25	Open-loop 0Hz output selection	0: No voltage output 1: With voltage output 2: Output as per DC braking current of stop	0	○
P01.26	Deceleration time of emergency-stop	0.0–60.0s	2.0s	○
P01.27	Time of starting section of deceleration S curve	0.0–50.0s	0.1s	◎
P01.28	Time of ending section of deceleration S curve	0.0–50.0s	0.1s	◎

Function code	Name	Description	Default value	Modify
P01.29	Short-circuit braking current	When the Inverter starts in direct start mode (P01.00=0), set P01.30 to a non-zero value to enter short-circuit braking. During stop, if the running frequency of Inverter is below the starting frequency of braking after stop (P01.09), set P01.31 to a non-zero value to enter short-circuit braking after stop, and then carry out DC braking in the time set by P01.12 (refer to P01.09–P01.12). Setting range of P01.29: 0.0–150.0% (of the rated Inverter output current) Setting range of P01.30: 0.0–50.0s Setting range of P01.31: 0.0–50.0s	0.0%	○
P01.30	Hold time of short-circuit braking at startup		0.00s	○
P01.31	Hold time of short-circuit brake at stop		0.00s	○
P01.32	Pre-exciting time of jogging	0–10.000s	0.300s	○
P01.33	Starting frequency of braking for jogging to stop	0–P00.03	0.00Hz	○
P01.34	Delay to enter sleep	0–3600.0s	0.0s	○

P02 group—Parameters of motor 1

Function code	Name	Description	Default value	Modify
P02.00	Type of motor 1	0: Asynchronous motor 1: Synchronous motor	0	◎
P02.01	Rated power of asynchronous motor 1	0.1–3000.0kW	Depend on model	◎
P02.02	Rated frequency of asynchronous motor 1	0.01Hz–P00.03 (max. output frequency)	50.00Hz	◎
P02.03	Rated speed of asynchronous motor 1	1–60000rpm	Depend on model	◎
P02.04	Rated voltage of asynchronous motor 1	0–1200V	Depend on model	◎
P02.05	Rated current of asynchronous motor 1	0.8–6000.0A	Depend on model	◎

Function code	Name	Description	Default value	Modify
P02.06	Stator resistance of asynchronous motor 1	0.001–65.535Ω	Depend on model	○
P02.07	Rotor resistance of asynchronous motor 1	0.001–65.535Ω	Depend on model	○
P02.08	Leakage inductance of asynchronous motor 1	0.1–6553.5mH	Depend on model	○
P02.09	Mutual inductance of asynchronous motor 1	0.1–6553.5mH	Depend on model	○
P02.10	No-load current of asynchronous motor 1	0.1–6553.5A	Depend on model	○
P02.11	Magnetic saturation coefficient 1 of iron core of asynchronous motor 1	0.0–100.0%	80.0%	○
P02.12	Magnetic saturation coefficient 2 of iron core of asynchronous motor 1	0.0–100.0%	68.0%	○
P02.13	Magnetic saturation coefficient 3 of iron core of asynchronous motor 1	0.0–100.0%	57.0%	○
P02.14	Magnetic saturation coefficient 4 of iron core of asynchronous motor 1	0.0–100.0%	40.0%	○
P02.15	Rated power of synchronous motor 1	0.1–3000.0kW	Depend on model	◎

Function code	Name	Description	Default value	Modify
P02.16	Rated frequency of synchronous motor 1	0.01Hz–P00.03 (max. output frequency)	50.00Hz	◎
P02.17	Number of pole pairs of synchronous motor 1	1–128	2	◎
P02.18	Rated voltage of synchronous motor 1	0–1200V	Depend on model	◎
P02.19	Rated current of synchronous motor 1	0.8–6000.0A	Depend on model	◎
P02.20	Stator resistance of synchronous motor 1	0.001–65.535Ω	Depend on model	○
P02.21	Direct-axis inductance of synchronous motor 1	0.01–655.35mH	Depend on model	○
P02.22	Quadrature-axis inductance of synchronous motor 1	0.01–655.35mH	Depend on model	○
P02.23	Counter-emf constant of synchronous motor 1	0–10000	300	○
P02.24	Initial pole position of synchronous motor 1	0x0000–0xFFFF	0x0000	●
P02.25	Identification current of synchronous motor 1	0%–50% (rated motor current)	10%	●
P02.26	Overload protection of motor 1	0: No protection 1: Common motor (with low-speed compensation). As the cooling effect of common motor will be degraded in low speed, the corresponding electronic thermal protection value should also be adjusted properly. The low compensation here means to lower the overload protection threshold of	2	◎

Function code	Name	Description	Default value	Modify
		the motor whose running frequency is below 30Hz. 2: Frequency-variable motor (without low speed compensation). As the cooling effect of frequency-variable motor is not affected by the rotating speed, there is no need to adjust the protection value during low speed running.		
P02.27	Overload protection coefficient of motor 1	Motor overload multiples M=Iout/(In×K) In is rated motor current, Iout is Inverter output current, K is motor overload protection coefficient. The smaller the K, the larger the value of M, and the easier the protection. When M=116%, protection is performed after motor overload lasts for 1 hour; when M=150%, protection is performed after motor overload lasts for 12 minutes; when M=180%, protection is performed after motor overload lasts for 5 minutes; when M=200%, protection is performed after motor overload lasts for 60 seconds; and when M≥400%, protection is performed immediately. 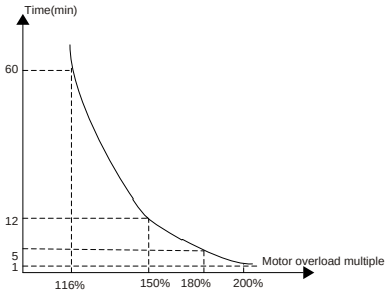 Setting range: 20.0%–120.0%	100.0%	○
P02.28	Power display calibration coefficient of motor 1	This function adjusts the power display value of motor 1 only, and it does not affect the control performance of the Inverter. Setting range: 0.00–3.00	1.00	○
P02.29	Parameter display of motor 1	0: Display as per motor type; under this mode, only parameters related to current motor type will be displayed. 1: Display all; under this mode, all the motor parameters will be displayed.	0	○
P02.30	System inertia of motor 1	0.000–30.000kgm^2	0.000 kgm^2	○

Function code	Name	Description	Default value	Modify
P02.31–P02.32	Reserved	/	/	/

P03 group—Vector control of motor 1

Function code	Name	Description	Default value	Modify
P03.00	Speed loop proportional gain 1	Parameters of P03.00–P03.05 fit for vector control mode only. Below P03.02, speed loop PI parameter is P03.00 and P03.01; above P03.05, speed loop PI parameter is P03.03 and P03.04; in between, PI parameter is obtained by linear variation between two groups of parameters, as shown below. 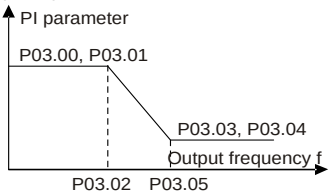 The speed loop dynamic response characteristics of vector control can be adjusted by setting the proportional coefficient and integral time of speed regulator. Increase proportional gain or decrease integral time can accelerate dynamic response of speed loop, however, if the proportional gain is too large or integral time is too small, system oscillation and overshoot may occur; if proportional gain is too small, stable oscillation or speed offset may occur. Speed loop PI parameter is closely related to the system inertial, users should make adjustment based on default PI parameter according to different load characteristics to fulfill different needs. Setting range of P03.00:0.0–200.0; Setting range of P03.01: 0.000–10.000s Setting range of P03.02: 0.00Hz–P03.05 Setting range of P03.03: 0.0–200.0 Setting range of P03.04: 0.000–10.000s Setting range of P03.05: P03.02–P00.03 (max. output frequency)	20.0	○
P03.01	Speed loop integral time 1		0.200s	○
P03.02	Switch low point frequency		5.00Hz	○
P03.03	Speed loop proportional gain 2		20.0	○
P03.04	Speed loop integral time 2		0.200s	○
P03.05	Switch over high point frequency		10.00Hz	○
P03.06	Speed loop output filter	0–8 (corresponds to 0–2^8/10ms)	0	○

Function code	Name	Description	Default value	Modify
P03.07	Vector control slip compensation coefficient (motoring)	Slip compensation coefficient is used to adjust the slip frequency of vector control to improve speed control precision. This parameter can be used to control speed offset. Setting range: 50–200%	100%	○
P03.08	Vector control slip compensation coefficient (generating)		100%	○
P03.09	Current loop proportional coefficient P	**Note:** 1. These two parameters are used to adjust PI parameters of current loop; it affects dynamic response speed and control precision of the system directly. The default value needs no adjustment under common conditions; 2. Fit for SVC mode 0 (P00.00=0) , SVC mode 1 (P00.00=1) and FVC mode (P00.00=3); Setting range: 0–65535	1000	○
P03.10	Current loop integral coefficient I		1000	○
P03.11	Torque setting method	0: Keypad (P03.12) 1: Keypad (P03.12) 2: AI1 3: AI2 4: AI3 5: Pulse frequency HDIA 6: Multi-step torque 7: Modbus/Modbus TCP communication 8: PROFIBUS/CANopen/DeviceNet communication 9: Ethernet communication 10: Pulse frequency HDIB 11: EtherCAT/PROFINET/EtherNet IP communication 12: PLC **Note:** For these settings, 100% corresponds to the motor rated current.	0	○
P03.12	Torque set through keypad	-300.0%–300.0% (of the motor rated current)	20.0%	○
P03.13	Torque reference filter time	0.000–10.000s	0.010s	○
P03.14	Setting source of FWD rotation frequency upper limit in	0: Keypad (P03.16) 1: AI1 2: AI2 3: AI3	0	○

Function code	Name	Description	Default value	Modify
	torque control	4: Pulse frequency HDIA 5: Multi-step 6: Modbus/Modbus TCP communication 7: PROFIBUS/CANopen/DeviceNet communication 8: Ethernet communication 9: Pulse frequency HDIB 10: EtherCAT/PROFINET/EtherNet IP communication 11: PLC 12: Reserved **Note:** For these settings, 100% corresponds to the max. frequency.		
P03.15	Setting source of REV rotation frequency upper limit in torque control	0: Keypad (P03.17) 1–11: the same as P03.14	0	○
P03.16	FWD rotation frequency upper limit set through keypad in torque control	Used to specify frequency limits. 100% corresponds to the max. frequency. P03.16 specifies the upper-limit frequency when P03.14=1; P03.17 specifies the upper-limit frequency when P03.15=1. Setting range: 0.00Hz–P00.03 (max. output frequency)	50.00Hz	○
P03.17	REV rotation frequency upper limit set through keypad in torque control		50.00Hz	○
P03.18	Setting source of electromotive torque upper limit	0: Keypad (P03.20) 1: AI1 2: AI2 3: AI3 4: Pulse frequency HDIA 5: Modbus/Modbus TCP communication 6: PROFIBUS/CANopen/DeviceNet communication 7: Ethernet communication 8: Pulse frequency HDIB 9: EtherCAT/PROFINET/EtherNet IP communication 10: PLC 11: Reserved **Note:** For these settings, 100% corresponds to the motor rated current.	0	○
P03.19	Setting source of braking	0: Keypad (P03.21) 1–10: the same as P03.18	0	○

Function code	Name	Description	Default value	Modify
	torque upper limit			
P03.20	Electromotive torque upper limit set through keypad	Used to set torque limits. Setting range: 0.0–300.0% (of the motor rated current)	180.0%	○
P03.21	Braking torque upper limit set through keypad		180.0%	○
P03.22	Flux-weakening coefficient of constant-power zone	Used when asynchronous motor is in flux-weakening control.	0.3	○
P03.23	Min. flux-weakening point of constant-power zone	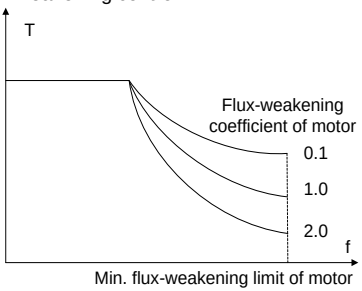 P03.22 and P03.23 are valid during constant power. When motor speed is above rated speed, motor enters flux-weakening running state. The flux-weakening control coefficient can change the flux-weakening curvature, the larger the coefficient, the steeper the curve, the smaller the coefficient, the smoother the curve. Setting range of P03.22: 0.1–2.0 Setting range of P03.23: 10%–100%	20%	○
P03.24	Max. voltage limit	P03.24 sets the max. output voltage of the Inverter, which is the percentage of rated motor voltage. This value should be set according to field conditions. Setting range:0.0–120.0%	100.0%	○
P03.25	Pre-exciting time	Carry out motor pre-exciting during starting to build a magnetic field inside the motor to improve the torque characteristics of motor during starting. Setting range: 0.000–10.000s	0.300s	○
P03.26	Flux-weakening proportional gain	0–8000	1000	○
P03.27	Vector control speed display	0: Display as per actual value 1: Display as per the set value	0	○

Function code	Name	Description	Default value	Modify
P03.28	Static friction compensation coefficient	0.0–100.0%	0.0%	○
P03.29	Corresponding frequency point of static friction	0.50Hz–P03.31	1.00Hz	○
P03.30	High speed friction compensation coefficient	0.0–100.0%	0.0%	○
P03.31	Corresponding frequency of high speed friction torque	P03.29–590.00Hz	50.00Hz	○
P03.32	Enabling torque control	0:Disable 1:Enable	0	◎
P03.33	Flux weakening integral gain	0–8000	1200	○
P03.34	Flux-weakening control mode	0x000–0x112 Ones place: Control mode 0: Mode 0 1: Mode 1 2: Mode 2 Tens place: Compensation of inductance saturation coefficient 0: Enable 1: Disable Hundreds place: Reserved 0: Reserved 1: Reserved	0x000	○
P03.35	Control optimization setting	0x0000–0x1111 Ones place: Torque command selection 0: Torque reference 1: Torque current reference Tens place: Reserved 0: Reserved 1: Reserved Hundreds place: Whether to enable ASR integral separation 0: Disable 1: Enable Thousands place: Reserved 0: Reserved 1: Reserved	0x0000	○

Function code	Name	Description	Default value	Modify
P03.36	Speed loop differential gain	0.00–10.00s	0.00s	○
P03.37	High-frequency current loop proportional coefficient	Under FVC (P00.00=3) and P03.39, the current loop PI parameters are P03.09 and P03.10; above P03.39, the PI parameters are P03.37 and P03.38. Setting range of P03.37: 0–65535 Setting range of P03.38: 0–65535 Setting range of P03.39: 0.0–100.0% (relative to max. frequency)	1000	○
P03.38	High-frequency current loop integral coefficient		1000	○
P03.39	Current loop high-frequency switch-over point		100.0%	○
P03.40	Enabling inertia compensation	0: Disable 1: Enable	0	○
P03.41	Upper limit of inertia compensation torque	Limit the max. inertia compensation torque to prevent inertia compensation torque from being too large. Setting range: 0.0–150.0% (rated motor torque)	10.0%	○
P03.42	Inertia compensation filter times	Filter times of inertia compensation torque, used to smooth inertia compensation torque. Setting range: 0–10	7	○
P03.43	Inertia identification torque value	Due to friction force, it is required to set certain identification torque for the inertia identification to be performed properly. 0.0–100.0% (rated motor torque)	10.0%	○
P03.44	Enable inertia identification	0: No operation 1: Start identification	0	◎
P03.45	Current loop proportional coefficient after autotuning	Automatic update will be performed after motor parameter autotuning. In the closed-loop vector control mode for synchronous motors, you can set the value of this function code to P03.09. Range: 0–65535 **Note:** Set the value to 0 if motor parameter autotuning is not performed.	0	●
P03.46	Current integral proportional coefficient after autotuning	Automatic update will be performed after motor parameter autotuning. In the closed-loop vector control mode for synchronous motors, you can set the value of this function code to P03.10. Range: 0–65535	0	●

Function code	Name	Description	Default value	Modify
		Note: Set the value to 0 if motor parameter autotuning is not performed.		

P04 group—V/F control

Function code	Name	Description	Default value	Modify
P04.00	V/F curve setting of motor 1	This group of function code defines the V/F curve of motor 1 to satisfy different load characteristics needs. 0: Straight V/F curve; fit for constant-torque load 1: Multi-point V/F curve 2: Torque-down V/F curve (power of 1.3) 3: Torque-down V/F curve (power of 1.7) 4: Torque-down V/F curve (power of 2.0) Curves 2–4 are suitable for torque-variable load of fan pump and similar equipment. Users can make adjustment based on load characteristics to achieve optimal energy-saving effect. 5: Customized V/F (V/F separation); under this mode, V is separated from f. Users can adjust f through the frequency reference channel set by P00.06 to change the curve characteristic, or adjust V through the voltage reference channel set by P04.27 to change the curve characteristics. **Note: The V_b** in the figure below corresponds to rated motor voltage, and **f_b** corresponds to rated motor frequency. 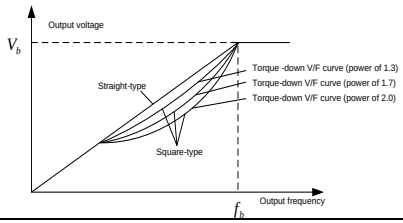	0	◎
P04.01	Torque boost of motor 1	In order to compensate for low-frequency torque characteristics, users can make some boost compensation to the output voltage. P04.01 is relative to the max. output voltage V_b. P04.02 defines the percentage of cut-off	0.0%	○
P04.02	Motor 1 torque boost cut-off		20.0%	○

Function code	Name	Description	Default value	Modify
		frequency of manual torque boost to the rated motor frequency f_b. Torque boost can improve the low-frequency torque characteristics of V/F. Users should select torque boost based on the load, for example, larger load requires larger torque boost, however, if the torque boost is too large, the motor will run at over-excitation, which will cause increased output current and motor heat-up, thus degrading the efficiency. When torque boost is set to 0.0%, the Inverter is automatic torque boost. Torque boost cut-off threshold: Below this frequency threshold, the torque boost is valid, exceeding this threshold will nullify torque boost. 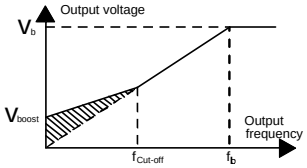 Setting range of P04.01: 0.0%: (automatic) 0.1%–10.0% Setting range of P04.02: 0.0%–50.0%		
P04.03	V/F frequency point 1 of motor 1	When P04.00 =1 (multi-point V/F curve), users can set V/F curve via P04.03–P04.08. V/F curve is usually set according to the characteristics of motor load. **Note:** V1<V2<V3, f1<f2<f3. If low-frequency voltage is set too high, motor overheat or burnt-down may occur, and overcurrent stall or overcurrent protection may occur to the Inverter. 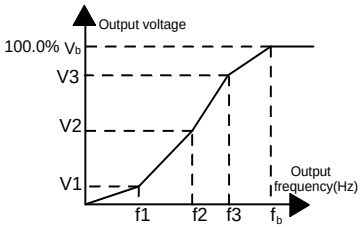 Setting range of P04.03: 0.00Hz–P04.05 Setting range of P04.04: 0.0%–110.0% (rated	0.00Hz	○
P04.04	V/F voltage point 1 of motor 1		0.0%	○
P04.05	V/F frequency point 2 of motor 1		0.00Hz	○
P04.06	V/F voltage point 2 of motor 1		0.0%	○
P04.07	V/F frequency point 3 of motor 1		0.00Hz	○
P04.08	V/F voltage point 3 of motor 1		0.0%	○

Function code	Name	Description	Default value	Modify
		voltage of motor 1) Setting range of P04.05: P04.03–P04.07 Setting range of P04.06: 0.0%–110.0% (rated voltage of motor 1) Setting range of P04.07: P04.05–P02.02 (rated frequency of motor 1) or P04.05–P02.16 (rated frequency of motor 1) Setting range of P04.08: 0.0%–110.0% (rated voltage of motor 1)		
P04.09	V/F slip compensation gain of motor 1	This function code is used to compensate for the motor speed changes occurred during load variation in V/F control mode, thus improving the rigidity of mechanical characteristics of motor. Rated slip frequency of the motor should be calculated. $\triangle f=f_b-n\times p/60$ of which: f_b is rated motor frequency, corresponds to P02.02; n is rated motor speed, corresponds to P02.03; p is the number of motor pole pairs. 100% corresponds to the rated slip frequency of motor $\triangle f$. Setting range: 0.0–200.0%	100.0%	○
P04.10	Low-frequency oscillation control factor of motor 1	In V/F control mode, the motor, especially the large-power motor may experience current oscillation during certain frequencies, which may lead to unstable motor operation, or even Inverter overcurrent, users can adjust these two parameters properly to eliminate such phenomenon. Setting range of P04.10: 0–100 Setting range of P04.11: 0–100 Setting range of P04.12: 0.00Hz–P00.03 (max. output frequency)	10	○
P04.11	High-frequency oscillation control factor of motor 1		10	○
P04.12	Oscillation control threshold of motor 1		30.00Hz	○
P04.13	V/F curve setup of motor 2	0: Straight V/F curve; 1: Multi-point V/F curve 2: Torque-down V/F curve (power of 1.3) 3: Torque-down V/F curve (power of 1.7) 4: Torque-down V/F curve (power of 2.0) 5: Customize V/F (V/F separation)	0	◎
P04.14	Torque boost of motor 2	0.0%: (automatic) 0.1%–10.0%	0.0%	○
P04.15	Motor 2 torque boost cut-off	0.0%–50.0% (relative to rated frequency of motor 2)	20.0%	○
P04.16	V/F frequency point 1 of motor 2	0.00Hz–P04.18	0.00Hz	○

Function code	Name	Description	Default value	Modify
P04.17	V/F voltage point 1 of motor 2	0.0%–110.0% (rated voltage of motor 2)	0.0%	○
P04.18	V/F frequency point 2 of motor 2	P04.16–P04.20	0.00Hz	○
P04.19	V/F voltage point 2 of motor 2	0.0%–110.0% (rated voltage of motor 2)	0.0%	○
P04.20	V/F frequency point 3 of motor 2	P04.18–P12.02 (rated frequency of asynchronous motor 2) Or P04.18–P12.16 (rated frequency of synchronous motor 2)	0.00Hz	○
P04.21	V/F voltage point 3 of motor 2	0.0%–110.0% (rated motor voltage)	0.0%	○
P04.22	V/F slip compensation gain of motor 2	0.0–200.0%	0.0%	○
P04.23	Low-frequency oscillation control factor of motor 2	In the SVPWM mode, current oscillation may easily occur on motors, especially large-power motors, at some frequency, which may cause unstable running of motors or even overcurrent of Inverters. You can modify this parameter to prevent current oscillation. Setting range of P04.23: 0–100 Setting range of P04.24: 0–100 Setting range of P04.25: 0.00Hz–P00.03 (max. output frequency)	10	○
P04.24	High-frequency oscillation control factor of motor 2		10	○
P04.25	Oscillation control threshold of motor 2		30.00Hz	○
P04.26	Energy-saving run	0: No action 1: Automatic energy-saving operation Under light-load state, the motor can adjust the output voltage automatically to achieve energy-saving purpose	0	◎
P04.27	Channel of voltage setup	0: Keypad; output voltage is determined by P04.28 1: AI1 2: AI2 3: AI3 4: HDIA 5: Multi-step (the set value is determined by P10 group) 6: PID	0	○

Function code	Name	Description	Default value	Modify
		7: Modbus/Modbus TCP communication 8: PROFIBUS/CANopen/DeviceNet communication 9: Ethernet communication 10: HDIB 11: EtherCAT/PROFINET/EtherNet IP communication 12: Programmable card 13: Reserved		
P04.28	Set voltage value via keypad	When the channel for voltage setup is set to "keypad", the value of this function code is digital voltage set value. Setting range: 0.0%–100.0%	100.0%	○
P04.29	Voltage acceleration time	Voltage increase time means the time needed from outputting the min. voltage to accelerating to output the max. voltage.	5.0s	○
P04.30	Voltage deceleration time	Voltage decrease time means the time needed from outputting max. voltage to outputting the min. voltage Setting range: 0.0–3600.0s	5.0s	○
P04.31	Max. output voltage	Set the upper/lower limit value of output voltage.	100.0%	◎
P04.32	Min. output voltage	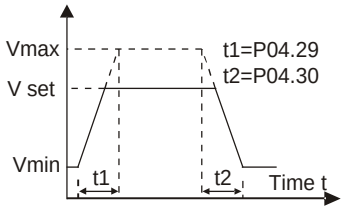 Setting range of P04.31: P04.32–100.0% (rated motor voltage) Setting range of P04.32: 0.0%–P04.31	0.0%	◎
P04.33	Flux-weakening coefficient of constant-power zone	1.00–1.30	1.00	○
P04.34	VF pull-in current 1 of synchronous motor	When the synchronous motor VF control mode is enabled, this parameter is used to set the reactive current of the motor when the output frequency is lower than the frequency set in P04.36. Setting range: -100.0%–+100.0% (of the motor rated current)	20.0%	○

Function code	Name	Description	Default value	Modify
P04.35	VF pull-in current 2 of synchronous motor	When the synchronous motor VF control mode is enabled, this parameter is used to set the reactive current of the motor when the output frequency is higher than the frequency set in P04.36. Setting range: -100.0%–+100.0% (of the motor rated current)	10.0%	○
P04.36	VF pull-in current frequency switch-over threshold of synchronous motor	When the synchronous motor VF control mode is enabled, this parameter is used to set the frequency threshold for the switching between injection current 1 and injection current 2. Setting range: 0.0%–200.0% (of the motor rated frequency)	20.0%	○
P04.37	VF reactive closed-loop proportional coefficient of synchronous motor	When the synchronous motor VF control mode is enabled, this parameter is used to set the proportional coefficient of the reactive current closed-loop control. Setting range: 0–3000	50	○
P04.38	VF reactive closed-loop integral time of synchronous motor	When the synchronous motor VF control mode is enabled, this parameter is used to set the integral coefficient of the reactive current closed-loop control. Setting range: 0–3000	30	○
P04.39	VF reactive closed-loop output limit of synchronous motor	When the synchronous motor VF control mode is enabled, this parameter is used to set the output limit of the reactive current in the closed-loop control. A greater value indicates a higher reactive closed-loop compensation voltage and higher output power of the motor. In general, you do not need to modify this parameter. Setting range: 0–16000	8000	○
P04.40	Enable/disable IF mode of asynchronous motor 1	0: Disabled 1: Enabled	0	◎
P04.41	IF current setting of asynchronous motor 1	When IF control is adopted for asynchronous motor 1, this parameter is used to set the output current. The value is a percentage in relative to the rated current of the motor. Setting range: 0.0–200.0%	120.0%	○
P04.42	IF proportional coefficient of asynchronous motor 1	When IF control is adopted for asynchronous motor 1, this parameter is used to set the proportional coefficient of the output current closed-loop control.	350	○

Function code	Name	Description	Default value	Modify
		Setting range: 0–5000		
P04.43	IF integral coefficient of asynchronous motor 1	When IF control is adopted for asynchronous motor 1, this parameter is used to set the integral coefficient of the output current closed-loop control. Setting range: 0–5000	150	○
P04.44	Starting frequency point for switching off IF mode for asynchronous motor 1	0.00Hz–P04.50	10.00Hz	○
P04.45	Enable/disable IF mode of asynchronous motor 2	0: Disabled 1: Enabled	0	◎
P04.46	IF current setting of asynchronous motor 2	When IF control is adopted for asynchronous motor 2, this parameter is used to set the output current. The value is a percentage in relative to the rated current of the motor. Setting range: 0.0–200.0%	120.0%	○
P04.47	IF proportional coefficient of asynchronous motor 2	When IF control is adopted for asynchronous motor 2, this parameter is used to set the proportional coefficient of the output current closed-loop control. Setting range: 0–5000	350	○
P04.48	IF integral coefficient of asynchronous motor 2	When IF control is adopted for asynchronous motor 2, this parameter is used to set the integral coefficient of the output current closed-loop control. Setting range: 0–5000	150	○
P04.49	Starting frequency point for switching off IF mode for asynchronous motor 2	0.00Hz–P04.51	10.00Hz	○
P04.50	End frequency point for switching off IF mode for asynchronous motor 1	P04.44–P00.03	25.00Hz	○
P04.51	End frequency point for switching off IF	P04.49–P00.03	25.00Hz	○

Function code	Name	Description	Default value	Modify
	mode for asynchronous motor 2			

P05 group—Input terminals

Function code	Name	Description	Default value	Modify
P05.00	HDI input type	0x00–0x11 Ones: HDIA input type 0: HDIA is high-speed pulse input 1: HDIA is digital input Tens: HDIB input type 0: HDIB is high-speed pulse input 1: HDIB is digital input	0x00	◎
P05.01	Function of S1 terminal	0: No function 1: Forward running 2: Reverse running 3: 3-wire control 4: Forward jogging 5: Reverse jogging 6: Coast to stop 7: Fault reset 8: Running pause 9: External fault input 10: Frequency increase (UP) 11: Frequency decrease (DOWN) 12: Clear frequency increase/decrease setting 13: Switch-over between setup A and setup B 14: Switch-over between combination setup and setup A 15: Switch-over between combination setup and setup B 16: Multi-step speed terminal 1 17: Multi-step speed terminal 2 18: Multi-step speed terminal 3 19: Multi-step speed terminal 4 20: Multi-step speed pause 21: Acceleration/deceleration time selection 1 22: Acceleration/deceleration time selection 2 23: Simple PLC stop reset 24: Simple PLC pause 25: PID control pause 26: Wobbling frequency pause	1	◎
P05.02	Function of S2 terminal		4	◎
P05.03	Function of S3 terminal		7	◎
P05.04	Function of S4 terminal		0	◎
P05.05	Function of HDIA terminal		0	◎
P05.06	Function of HDIB terminal		0	◎

Function code	Name	Description	Default value	Modify
		27: Wobbling frequency reset 28: Counter reset 29: Switch-over between speed control and torque control 30: Acceleration/deceleration disabled 31: Counter trigger 32: Reserved 33: Clear frequency increase/decrease setting temporarily 34: DC brake 35: Switch-over between motor 1 and motor 2 36: Command switches to keypad 37: Command switches to terminal 38: Command switches to communication 39: Pre-exciting command 40: Zero out power consumption quantity 41: Maintain power consumption quantity 42: Source of upper torque limit switches to keypad 43: Position reference point input (only S6, S7 and S8 are valid) 44: Spindle orientation disabled 45: Spindle zeroing/local positioning zeroing 46: Spindle zero position selection 1 47: Spindle zero position selection 2 48: Spindle scale division selection 1 49: Spindle scale division selection 2 50: Spindle scale division selection 3 51: Position control and speed control switch-over terminal 52: Pulse input disabled 53: Clear position deviation cleared 54: Switch over position proportional gain 55: Enable cyclic positioning of digital position positioning 56: Emergency stop 57: Motor over-temperature fault input 58: Enable rigid tapping 59: Switches to V/F control 60: Switches to FVC control 61: PID polarity switch-over 62: Reserved		

Function code	Name	Description	Default value	Modify
		63: Enable servo 64: Limit of forward run 65: Limit of reverse run 66: Zero out encoder counting 67: Pulse increase 68: Enable pulse superimposition 69: Pulse decrease 70: Electronic gear selection 71: Switch to master 72: Switch to slave 73: Reset the roll diameter 74: Switch winding/unwinding 75: Pre-drive 76: Disable roll diameter calculation 77: Clear alarm display 78: Manual braking 79: Trigger forced feeding interrupt 80: Initial roll diameter 1 81: Initial roll diameter 2 82: Trigger fire mode control 83: Switch tension PID parameters 84–95: Reserved		
P05.07	Reserved	/	/	/
P05.08	Polarity of input terminal	This function code is used to set the polarity of input terminals. When the bit is set to 0, input terminal polarity is positive; When the bit is set to 1, input terminal polarity is negative; 0x00–0x3F	0x00	○
P05.09	Digital filter time	Set S1–S4, filter time of HDI terminal sampling. In cases where interference is strong, increase the value of this parameter to avoid mal-operation. 0.000–1.000s	0.010s	○
P05.10	Virtual terminal setting	0x00–0x3F (0: disable, 1: enable) BIT0: S1 virtual terminal BIT1: S2 virtual terminal BIT2: S3 virtual terminal BIT3: S4 virtual terminal BIT4: HDIA virtual terminal BIT5: HDIB virtual terminal	0x00	◎

<table>
<tr><th>Function code</th><th>Name</th><th>Description</th><th>Default value</th><th>Modify</th></tr>
<tr><td>P05.11</td><td>2/3 wire control mode</td><td>This function code is used to set the 2/3 wire control mode.
0: 2-wire control 1; integrate enabling function with direction. This mode is the most popular dual-line mode. Direction of motor rotation is determined by the defined FWD/REV terminal command.
 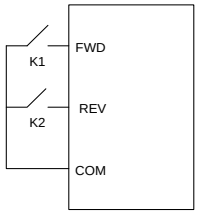

<table>
<tr><th>FWD</th><th>REV</th><th>Running command</th></tr>
<tr><td>OFF</td><td>OFF</td><td>Stop</td></tr>
<tr><td>ON</td><td>OFF</td><td>Forward running</td></tr>
<tr><td>OFF</td><td>ON</td><td>Reverse running</td></tr>
<tr><td>ON</td><td>ON</td><td>Hold</td></tr>
</table>
1: 2-wire control 2; separate enabling function with direction. In this mode, the defined FWD is enabling terminal, and the direction is determined by the state of REV.
 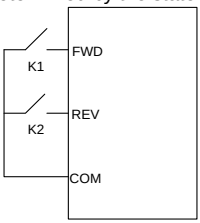

<table>
<tr><th>FWD</th><th>REV</th><th>Running command</th></tr>
<tr><td>OFF</td><td>OFF</td><td>Stop</td></tr>
<tr><td>ON</td><td>OFF</td><td>Forward running</td></tr>
<tr><td>OFF</td><td>ON</td><td>Stop</td></tr>
<tr><td>ON</td><td>ON</td><td>Reverse running</td></tr>
</table>
2: 3-wire control 1; This mode defines Sin as enabling terminal, and the running command is generated by FWD, the direction is controlled by REV. During running, the Sin terminal should be closed, and terminal FWD generates a rising edge signal, then the Inverter starts to run in the direction set by the state of terminal REV; the Inverter should be stopped by disconnecting terminal Sin.
 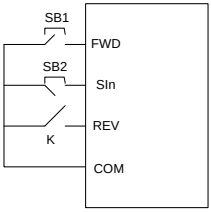

The direction control during running is shown below.</td><td>0</td><td>◎</td></tr>
</table>

Function code	Name	Description	Default value	Modify

SIn	REV	Previous running direction	Current running direction
ON	OFF→ON	Forward	Reverse
		Reverse	Forward
ON	ON→OFF	Reverse	Forward
		Forward	Reverse
ON→OFF	ON	Decelerate to stop	
	OFF		

SIn: 3-wire control, FWD: Forward running, REV: Reverse running

3: 3-wire control 2; This mode defines Sin as enabling terminal. The running command is generated by FWD or REV, and they control the running direction. During running, the terminal Sin should be closed, and terminal FWD or REV generates a rising edge signal to control the running and direction of Inverter; the Inverter should be stopped by disconnecting terminal Sin.

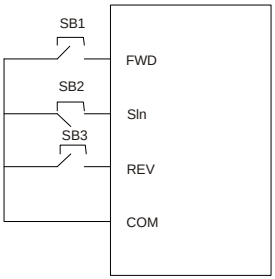

SIn	FWD	REV	Running direction
ON	OFF→ON	ON	Forward
		OFF	Forward
ON	ON	OFF→ON	Reverse
	OFF		Reverse
ON→OFF	/	/	Decelerate to stop
	/	/	

SIn: 3-wire control, FWD: Forward running, REV: Reverse running

Note: For dual-line running mode, when FWD/REV terminal is valid, if the Inverter stops

Function code	Name	Description	Default value	Modify
		due to stop command given by other sources, it will not run again after the stop command disappears even if the control terminals FWD/REV are still valid. To make the Inverter run again, users need to trigger FWD/REV again, eg, PLC single-cycle stop, fixed-length stop, and valid STOP/RST stop during terminal control. (see P07.04).		
P05.12	S1 terminal switch-on delay	These function codes define corresponding delay of the programmable input terminals during level variation from switch-on to switch-off. 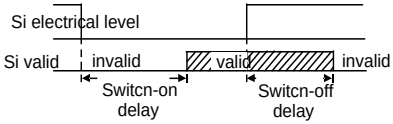 Setting range: 0.000–50.000s. **Note:** After a virtual terminal is enabled, the state of the terminal can only be changed in communication mode. The communication address is 0x200A.	0.000s	○
P05.13	S1 terminal switch-off delay		0.000s	○
P05.14	S2 terminal switch-on delay		0.000s	○
P05.15	S2 terminal switch-off delay		0.000s	○
P05.16	S3 terminal switch-on delay		0.000s	○
P05.17	S3 terminal switch-off delay		0.000s	○
P05.18	S4 terminal switch-on delay		0.000s	○
P05.19	S4 terminal switch-off delay		0.000s	○
P05.20	HDIA terminal switch-on delay		0.000s	○
P05.21	HDIA terminal switch-off delay		0.000s	○
P05.22	HDIB terminal switch-on delay		0.000s	○
P05.23	HDIB terminal switch-off delay		0.000s	○
P05.24	Lower limit value of AI1	These function codes define the relation between analog input voltage and corresponding set value of analog input. When the analog input voltage exceeds the range of	0.00V	○
P05.25	Corresponding setting of		0.0%	○

Function code	Name	Description	Default value	Modify
	lower limit of AI1	max./min. input, the max. input or min. input will be adopted during calculation.		
P05.26	Upper limit value of AI1	When analog input is current input, 0–20mA current corresponds to 0–10V voltage.	10.00V	○
P05.27	Corresponding setting of upper limit of AI1	In different applications, 100% of analog setting corresponds to different nominal values. The figure below illustrates several settings. 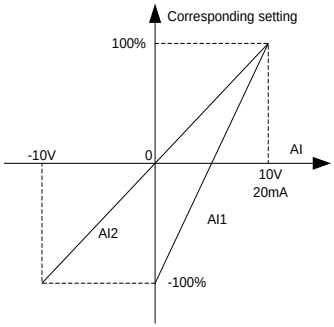	100.0%	○
P05.28	Input filter time of AI1		0.030s	○
P05.29	Lower limit value of AI2		-10.00V	○
P05.30	Corresponding setting of lower limit of AI2		-100.0%	○
P05.31	Intermediate value 1 of AI2		0.00V	○
P05.32	Corresponding setting of intermediate value 1 of AI2	Input filter time: Adjust the sensitivity of analog input, increase this value properly can enhance the anti-interference capacity of analog variables; however, it will also degrade the sensitivity of analog input.	0.0%	○
P05.33	Intermediate value 2 of AI2	**Note:** AI1 can support 0–10V/0–20mA input, when AI1 selects 0–20mA input; the corresponding voltage of 20mA is 10V; AI2 supports -10V–+10V input.	0.00V	○
P05.34	Corresponding setting of intermediate value 2 of AI2	Setting range of P05.24: 0.00V–P05.26	0.0%	○
P05.35	Upper limit value of AI2	Setting range of P05.25: -300.0%–300.0% Setting range of P05.26: P05.24–10.00V	10.00V	○
P05.36	Corresponding setting of upper limit of AI2	Setting range of P05.27: -300.0%–300.0% Setting range of P05.28: 0.000s–10.000s Setting range of P05.29: -10.00V–P05.31 Setting range of P05.30: -300.0%–300.0%	100.0%	○
P05.37	Input filter time of AI2	Setting range of P05.31: P05.29–P05.33 Setting range of P05.32: -300.0%–300.0% Setting range of P05.33: P05.31–P05.35 Setting range of P05.34: -300.0%–300.0% Setting range of P05.35: P05.33–10.00V Setting range of P05.36: -300.0%–300.0% Setting range of P05.37: 0.000s–10.000s	0.030s	○
P05.38	HDIA high-speed pulse input function	0: Set input via frequency 1: Reserved 2: Input via encoder, used in combination with HDIB	0	◎

Function code	Name	Description	Default value	Modify
P05.39	Lower limit frequency of HDIA	0.000 kHz–P05.41	0.000kHz	○
P05.40	Corresponding setting of lower limit frequency of HDIA	-300.0%–300.0%	0.0%	○
P05.41	Upper limit frequency of HDIA	P05.39–50.000kHz	50.000 kHz	○
P05.42	Corresponding setting of upper limit frequency of HDIA	-300.0%–300.0%	100.0%	○
P05.43	HDIA frequency input filter time	0.000s–10.000s	0.030s	○
P05.44	HDIB high-speed pulse input function selection	0: Set input via frequency 1: Reserved 2: Encoder input, it should be used in combination with HDIA	0	◎
P05.45	Lower limit frequency of HDIB	0.000 kHz–P05.47	0.000 kHz	○
P05.46	Corresponding setting of lower limit frequency of HDIB	-300.0%–300.0%	0.0%	○
P05.47	Upper limit frequency of HDIB	P05.45–50.000kHz	50.000 kHz	○
P05.48	Corresponding setting of upper limit frequency of HDIB	-300.0%–300.0%	100.0%	○
P05.49	HDIB frequency input filter time	0.000s–10.000s	0.030s	○
P05.50	AI1 input signal type	0–1 0: Voltage type	0	◎

Function code	Name	Description	Default value	Modify
		1: Current type **Note:** You can set the AI1 input signal type through the corresponding function code.		
P05.51–P05.52	Reserved	/	/	/

P06 group—Output terminals

Function code	Name	Description	Default value	Modify
P06.00	HDO output type	0: Open collector high-speed pulse output: Max. frequency of the pulse is 50.00kHz. For details about the related functions, see P06.27–P06.31. 1: Open collector output: For details about the related functions, see P06.02.	0	◎
P06.01	Y output selection	0: Invalid 1: In running 2: In forward running 3: In reverse running 4: In jogging 5: Inverter fault 6: Frequency level detection FDT1 7: Frequency level detection FDT2 8: Frequency reached 9: Running in zero speed 10: Reach upper limit frequency 11: Reach lower limit frequency 12: Ready to run 13: In pre-exciting 14: Overload pre-alarm 15: Underload pre-alarm 16: Simple PLC stage completed 17: Simple PLC cycle completed 18: Reach set counting value 19: Reach designated counting value 20: External fault is valid 21: Reserved 22: Reach running time 23: Virtual terminal output of Modbus/Modbus TCP communication 24: Virtual terminal output of POROFIBUS /CANopen communication 25: Virtual terminal output of Ethernet communication 26: DC bus voltage established 27: z pulse output	0	○
P06.02	HDO output selection		0	○
P06.03	Relay RO1 output selection		1	○
P06.04	Relay RO2 output selection		5	○

<table>
<tr><th>Function code</th><th>Name</th><th>Description</th><th>Default value</th><th>Modify</th></tr>
<tr><td></td><td></td><td>28: During pulse superposition
29: STO act
30: Positioning completed
31: Spindle zeroing completed
32: Spindle scale-division completed
33: Speed limit reached in torque control
34: Virtual terminal output of EtherCAT/PROFINET/EtherNet IP communication
35: Reserved
36: Speed/position control switch-over completed
37: Any frequency reached
38–40: Reserved
41: Y1 from the programmable card
42: Y2 from the programmable card
43: HDO from the programmable card
44: RO1 from the programmable card
45: RO2 from the programmable card
46: RO3 from the programmable card
47: RO4 from the programmable card
48: EC PT100 detected OH pre-alarm
49: EC PT1000 detected OH pre-alarm
50: AI/AO detected OH pre-alarm
51: Stopped or running at zero speed
52: Disconnection detected in tension control
53: Roll diameter setting reached
54: Max. roll diameter reached
55: Min. roll diameter reached
56: Fire control mode enabled
57–63: Reserved</td><td></td><td></td></tr>
<tr><td>P06.05</td><td>Output terminal polarity selection</td><td>This function code is used to set the polarity of output terminals.
When the bit is set to 0, input terminal polarity is positive;
When the bit is set to 1 input terminal polarity is negative.
<table>
<tr><td>BIT3</td><td>BIT2</td><td>BIT1</td><td>BIT0</td></tr>
<tr><td>RO2</td><td>RO1</td><td>HDO</td><td>Y</td></tr>
</table>
Setting range: 0x0–0xF</td><td>00</td><td>○</td></tr>
<tr><td>P06.06</td><td>Y switch-on delay</td><td rowspan="3">This function code defines the corresponding delay of the level variation from switch-on to switch-off.</td><td>0.000s</td><td>○</td></tr>
<tr><td>P06.07</td><td>Y switch-off delay</td><td>0.000s</td><td>○</td></tr>
<tr><td>P06.08</td><td>HDO switch-on delay</td><td>0.000s</td><td>○</td></tr>
</table>

Function code	Name	Description	Default value	Modify
P06.09	HDO switch-off delay	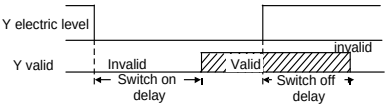 Setting range: 0.000–50.000s **Note:** P06.08 and P06.09 are valid only when P06.00=1.	0.000s	○
P06.10	Relay RO1 switch-on delay		0.000s	○
P06.11	Relay RO1 switch-off delay		0.000s	○
P06.12	Relay RO2 switch-on delay		0.000s	○
P06.13	Relay RO2 switch-off delay		0.000s	○
P06.14	AO1 output selection	0: Running frequency 1: Set frequency 2: Ramp reference frequency 3: Rotational speed (100% corresponds to the speed corresponding to max. output frequency) 4: Output current (100% corresponds to twice the Inverter rated current) 5: Output current (100% corresponds to twice the motor rated current) 6: Output voltage (100% corresponds to 1.5 times the Inverter rated voltage) 7: Output power (100% corresponds to twice the motor rated power) 8: Set torque (100% corresponds to twice the motor rated torque) 9: Output torque (Absolute value, 100% corresponds to twice the motor rated torque) 10: AI1 input 11: AI2 input 12: AI3 input 13: HDIA input 14: Value 1 set through Modbus/Modbus TCP communication 15: Value 2 set through Modbus/Modbus TCP communication 16: Value 1 set through PROFIBUS/CANopen/DeviceNet communication 17: Value 2 set through PROFIBUS/CANopen/DeviceNet communication 18: Value 1 set through Ethernet communication 19: Value 2 set through Ethernet communication 20: HDIB input	0	○
P06.15	Reserved		0	○
P06.16	HDO high-speed pulse output		0	○

Function code	Name	Description	Default value	Modify
		21: Value 1 set through EtherCAT/PROFINET/EtherNet IP communication 22: Torque current (bipolar, 0–Triple the motor rated current) 23: Exciting current (bipolar, 0–Triple the motor rated current) 24: Set frequency (bipolar) 25: Ramp reference frequency (bipolar) 26: Rotational speed (bipolar) 27: Value 2 set through EtherCAT/PROFINET/EtherNet IP communication 28: AO1 from the programmable card 29: AO2 from the programmable card 30: Rotational speed (100% corresponds to twice the motor rated synchronous speed) 31: Output torque (Actual value, 100% corresponds to twice the motor rated torque) 32: AI/AO temperature detection output 33–63: Reserved **Note:** When the output comes from the programmable card (28–29), if the card is a Codesys programmable card, P27.00 must be set to 1. When AO1 is of the current output type, 100% corresponds to 20mA; when AO1 is of the voltage output type, 100% corresponds to 10V; 100% of HDO corresponds to the output of P06.30.		
P06.17	Lower limit of AO1 output	Above function codes define the relation between output value and analog output. When the output value exceeds the set max./min. output range, the upper/low limit of output will be adopted during calculation. When analog output is current output, 1mA corresponds to 0.5V voltage. In different applications, 100% of output value corresponds to different analog outputs.	0.0%	○
P06.18	Corresponding AO1 output of lower limit		0.00V	○
P06.19	Upper limit of AO1 output		100.0%	○
P06.20	Corresponding AO1 output of upper limit		10.00V	○
P06.21	AO1 output filter time		0.000s	○

Function code	Name	Description	Default value	Modify
		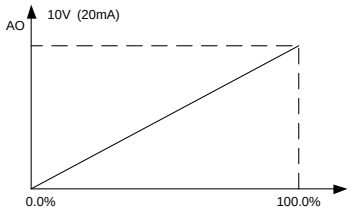 Setting range of P06.17: -300.0%–P06.19 Setting range of P06.18: 0.00V–10.00V Setting range of P06.19: P06.17–300.0% Setting range of P06.20: 0.00V–10.00V Setting range of P06.21: 0.000s–10.000s		
P06.22	Reserved	/	/	/
P06.23	PTC constant output current setting	0.000–20.000mA	4.000 mA	○
P06.24	PTC resistance alarm threshold	0–60000Ω	750Ω	○
P06.25	PTC resistance alarm recovery threshold	0–60000Ω	150Ω	○
P06.26	Actual PTC resistance	0–60000Ω	0Ω	●
P06.27	Lower limit of HDO output	-300.0%–P06.29	0.00%	○
P06.28	Corresponding HDO output of lower limit	0.00–50.00kHz	0.00kHz	○
P06.29	Upper limit of HDO output	P06.27–300.0%	100.0%	○
P06.30	Corresponding HDO output of upper limit	0.00–50.00kHz	50.00 kHz	○
P06.31	HDO output filter time	0.000s–10.000s	0.000s	○
P06.32	Reserved	/	/	/
P06.33	Frequency reach detection value	0–P00.03	1.00Hz	○
P06.34	Frequency reach detection time	0–3600.0s	0.5s	○

P07 group—HMI

Function code	Name	Description	Default value	Modify
P07.00	User password	0–65535 Set it to any non-zero value to enable password protection. 00000: Clear previous user password and disable password protection. After user password becomes valid, if wrong password is inputted, users will be denied entry. It is necessary to keep the user password in mind. Password protection will be effective one minute after exiting function code edit state, and it will display "0.0.0.0.0" if users press PRG/ESC key to enter function code edit state again, users need to input the correct password. **Note:** Restoring to default values will clear user password, use this function with caution.	0	○
P07.01	Reserved	/	/	/
P07.02	Function of keys	Range: 0x00–0x27 Ones: Function selection of QUICK/JOG key 0: No function 1: Jogging 2: Reserved 3: Forward/reverse rotation switch-over 4: Clear UP/DOWN setting 5: Coast to stop 6: Switch over the running command reference mode in sequence 7: Reserved Tens: Reserved	0x01	◎
P07.03	Running command channel switch-over sequence of QUICK key	When P07.02=6, set the switch-over sequence of running command channel. 0: keypad control→terminal control→ communication control 1: keypad control←→terminal control 2: keypad control←→communication control 3: terminal control←→communication control	0	○
P07.04	Stop function selection of STOP/RST key	Validness selection of stop function of STOP/RST. For fault reset, STOP/RST is valid under any situation. 0: valid only for panel control only 1: valid for both panel and terminal control 2: valid for both panel and communication control	0	○

Function code	Name	Description	Default value	Modify
		3: valid for all control modes		
P07.05–P07.07	Reserved	/	/	/
P07.08	Frequency display coefficient	0.01–10.00 Display frequency=running frequency×P07.08	1.00	○
P07.09	Speed display coefficient	0.1–999.9% Mechanical speed=120×display running frequency×P07.09/number of motor pole pairs	100.0%	○
P07.10	Linear speed display coefficient	0.1–999.9% Linear speed=mechanical speed×P07.10	1.0%	○
P07.11	Temperature of rectifier bridge module	-20.0–120.0°C	0.0°C	●
P07.12	Temperature of inverter module	-20.0–120.0°C	0.0°C	●
P07.13	Software version of control board	1.00–655.35	Depend on version	●
P07.14	Accumulated running time	0–65535h	0h	●
P07.15	High bit of Inverter power consumption	Display the power consumption of the Inverter. Inverter power consumption=P07.15×1000+P07.16 Setting range of P07.15: 0–65535 kWh (×1000) Setting range of P07.16: 0.0–999.9 kWh	0kWh	●
P07.16	Low bit of Inverter power consumption		0.0kWh	●
P07.17	Inverter type	0x0000–0xFFFF Bit0–bit3: G type or P type 0x0: G type 0x1: P type Bit4–bit11: Chip type and manufacturer 0x00: DSP(TI) 0x01–0x20: Reserved 0x21: MCU(ST) 0x22–0xFF: Reserved Bit12–bit15: Reserved	Depend on model	●
P07.18	Rated power of Inverter	0.4–3000.0kW	Depend on model	●
P07.19	Rated voltage of Inverter	50–1200V	Depend on model	●
P07.20	Rated current of Inverter	0.1–6000.0A	Depend on model	●
P07.21	Factory barcode	0x0000–0xFFFF	Depend	●

Function code	Name	Description	Default value	Modify
	1		on model	
P07.22	Factory barcode 2	0x0000–0xFFFF	Depend on model	●
P07.23	Factory barcode 3	0x0000–0xFFFF	Depend on model	●
P07.24	Factory barcode 4	0x0000–0xFFFF	Depend on model	●
P07.25	Factory barcode 5	0x0000–0xFFFF	Depend on model	●
P07.26	Factory barcode 6	0x0000–0xFFFF	Depend on model	●
P07.27	Type of present fault	0: No fault 1: Inverter unit U phase protection (OUt1) 2: Inverter unit V phase protection (OUt2) 3: Inverter unit W phase protection (OUt3) 4: Overcurrent during acceleration (OC1) 5: Overcurrent during deceleration (OC2) 6: Overcurrent during constant speed (OC3) 7: Overvoltage during acceleration (OV1) 8: Overvoltage during deceleration (OV2) 9: Overvoltage during constant speed (OV3) 10: Bus undervoltage fault (UV) 11: Motor overload (OL1) 12: Inverter overload (OL2) 13: Phase loss on input side (SPI) 14: Phase loss on output side (SPO) 15: Rectifier module overheat (OH1) 16: Inverter module overheat (OH2) 17: External fault (EF) 18: Modbus/Modbus TCP communication fault (CE) 19: Current detection fault (ItE) 20: Motor autotuning fault (tE) 21: EEPROM operation fault (EEP) 22: PID feedback offline fault (PIDE) 23: Brake unit fault (bCE) 24: Running time reached (END) 25: Electronic overload (OL3) 26: Keypad communication error (PCE) 27: Parameter upload error (UPE) 28: Parameter download error (DNE) 29: Profibus communication fault (E-DP) 30: Ethernet communication fault (E-NET) 31: CANopen communication fault (E-CAN) 32: To-ground short-circuit fault 1 (ETH1) 33: To-ground short-circuit fault 2 (ETH2)	0	●
P07.28	Type of the last fault		0	●
P07.29	Type of the last but one fault		0	●
P07.30	Type of the last but two fault		0	●
P07.31	Type of the last but three fault		0	●
P07.32	Type of the last but four fault		0	●

Function code	Name	Description	Default value	Modify
		34: Speed deviation fault (dEu) 35: Mal-adjustment fault (STo) 36: Underload fault (LL) 37: Encoder offline fault (ENC1o) 38: Encoder reversal fault (ENC1d) 39: Encoder Z pulse offline fault (ENC1Z) 40: Safe torque off (STO) 41: Channel H1 safety circuit exception (STL1) 42: Channel H2 safety circuit exception (STL2) 43: Channel H1 and H2 exception (STL3) 44: Safety code FLASH CRC fault (CrCE) 45: Programmable card customized fault 1 (P-E1) 46: Programmable card customized fault 2 (P-E2) 47: Programmable card customized fault 3 (P-E3) 48: Programmable card customized fault 4 (P-E4) 49: Programmable card customized fault 5 (P-E5) 50: Programmable card customized fault 6 (P-E6) 51: Programmable card customized fault 7 (P-E7) 52: Programmable card customized fault 8 (P-E8) 53: Programmable card customized fault 9 (P-E9) 54: Programmable card customized fault 10 (P-E10) 55: Repetitive expansion card type fault (E-Err) 56: Encoder UVW loss fault (ENCUV) 57: Profibus communication fault (E-PN) 58: CANopen communication fault (SECAN) 59: Motor over-temperature fault (OT) 60: Card slot 1 card identification failure (F1-Er) 61: Card slot 2 card identification failure (F2-Er) 62: Card slot 3 card identification failure (F3-Er) 63: Card slot 1 card communication timeout fault (C1-Er)		

Function code	Name	Description	Default value	Modify
		64: Card slot 2 card communication timeout fault (C2-Er) 65: Card slot 3 card communication timeout fault (C3-Er) 66: EtherCAT communication fault (E-CAT) 67: Bacnet communication fault (E-BAC) 68: DeviceNet communication fault (E-DEV) 69: Master-slave synchronous CAN slave fault (S-Err) 70: EC PT100 detected overheating (OtE1) 71: EC PT1000 detected overheating (OtE2) 72: EtherNet/IP communication timeout (E-EIP) 73: No upgrade bootload (E-PAO) 74: AI1 disconnected (E-AI1) 75: AI2 disconnected (E-AI2) 76: AI3 disconnected (E-AI3)		
P07.33	Running frequency at present fault	0.00Hz–P00.03	0.00Hz	●
P07.34	Ramp reference frequency at present fault	0.00Hz–P00.03	0.00Hz	●
P07.35	Output voltage at present fault	0–1200V	0V	●
P07.36	Output current at present fault	0.0–6300.0A	0.0A	●
P07.37	Bus voltage at present fault	0.0–2000.0V	0.0V	●
P07.38	Max. temperature at present fault	-20.0–120.0°C	0.0°C	●
P07.39	Input terminal state at present fault	0x0000–0xFFFF	0	●
P07.40	Output terminal state at present fault	0x0000–0xFFFF	0	●
P07.41	Running frequency at the last fault	0.00Hz–P00.03	0.00Hz	●
P07.42	Ramp reference frequency at the last fault	0.00Hz–P00.03	0.00Hz	●
P07.43	Output voltage at the last fault	0–1200V	0V	●

Function code	Name	Description	Default value	Modify
P07.44	Output current at the last fault	0.0–6300.0A	0.0A	●
P07.45	Bus voltage at the last fault	0.0–2000.0V	0.0V	●
P07.46	Max. temperature at the last fault	-20.0–120.0°C	0.0°C	●
P07.47	Input terminal state at the last fault	0x0000–0xFFFF	0	●
P07.48	Output terminal state at the last fault	0x0000–0xFFFF	0	●
P07.49	Running frequency at the 2nd-last fault	0.00Hz–P00.03	0.00Hz	●
P07.50	Ramp reference frequency at the 2nd-last fault	0.00Hz–P00.03	0.00Hz	●
P07.51	Output voltage at the 2nd-last fault	0–1200V	0V	●
P07.52	Output current at the 2nd-last fault	0.0–6300.0A	0.0A	●
P07.53	Bus voltage at the 2nd-last fault	0.0–2000.0V	0.0V	●
P07.54	Max. temperature at the 2nd-last fault	-20.0–120.0°C	0.0°C	●
P07.55	Input terminal state at the 2nd-last fault	0x0000–0xFFFF	0x0000	●
P07.56	Output terminal state at the 2nd-last fault	0x0000–0xFFFF	0x0000	●

P08 group—Enhanced functions

Function code	Name	Description	Default value	Modify
P08.00	Acceleration time 2	See P00.11 and P00.12 for detailed definitions.	Depend on model	○

Function code	Name	Description	Default value	Modify
P08.01	Deceleration time 2	The S1 IP55 high-ingress protection inverter defines four groups of acceleration/ deceleration time, which can be selected by multi-function digital input terminal (P05 group). The acceleration/deceleration time of the Inverter is the first group by default. Setting range: 0.0–3600.0s	Depend on model	○
P08.02	Acceleration time 3		Depend on model	○
P08.03	Deceleration time 3		Depend on model	○
P08.04	Acceleration time 4		Depend on model	○
P08.05	Deceleration time 4		Depend on model	○
P08.06	Running frequency of jogging	This function code is used to define the reference frequency of the Inverter during jogging. Setting range: 0.00Hz–P00.03 (max. output frequency)	5.00Hz	○
P08.07	Acceleration time of jogging	Jogging acceleration time is the time needed for the Inverter to accelerate from 0Hz to max. output frequency (P00.03). Jogging deceleration time is the time needed from decelerating from the max. output frequency (P00.03) to 0Hz. Setting range: 0.0–3600.0s	Depend on model	○
P08.08	Deceleration time of jogging			○
P08.09	Jump frequency 1	When the set frequency is within the range of jump frequency, the Inverter will run at the boundary of jump frequency. The Inverter can avoid mechanical resonance point by setting the jump frequency, and three jump frequency points can be set. If the jump frequency points are set to 0, this function will be invalid. 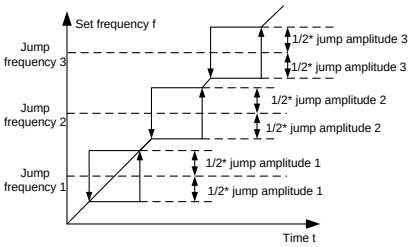 Setting range: 0.00Hz–P00.03 (max. output frequency)	0.00Hz	○
P08.10	Jump frequency amplitude 1		0.00Hz	○
P08.11	Jump frequency 2		0.00Hz	○
P08.12	Jump frequency amplitude 2		0.00Hz	○
P08.13	Jump frequency 3		0.00Hz	○
P08.14	Jump frequency amplitude 3		0.00Hz	○
P08.15	Amplitude of wobbling frequency	0.0–100.0% (relative to set frequency)	0.0%	○

Function code	Name	Description	Default value	Modify
P08.16	Amplitude of jump frequency	0.0–50.0% (relative to amplitude of wobbling frequency)	0.0%	○
P08.17	Rise time of wobbling frequency	0.1–3600.0s	5.0s	○
P08.18	Descend time of wobbling frequency	0.1–3600.0s	5.0s	○
P08.19	Switching frequency of acceleration/deceleration time	0.00–P00.03 (max. output frequency) 0.00Hz: no switch-over Switch to acceleration/deceleration time 2 if the running frequency is larger than P08.19	0.00Hz	○
P08.20	Frequency threshold of the start of droop control	0.00–50.00Hz	2.00Hz	○
P08.21	Reference frequency of acceleration/deceleration time	0: Max. output frequency 1: Set frequency 2: 100Hz **Note:** Valid for straight acceleration/deceleration only.	0	◎
P08.22	Reserved	/	/	/
P08.23	Number of decimal points of frequency	0: Two decimal points 1: One decimal point	0	○
P08.24	Number of decimal points of linear speed	0: No decimal point 1: One 2: Two 3: Three	0	○
P08.25	Set count value	P08.26–65535	0	○
P08.26	Designated count value	0–P08.25	0	○
P08.27	Set running time	0–65535min	0min	○
P08.28	Automatic fault reset times	Automatic fault reset times: When the Inverter selects automatic fault reset, it is used to set the times of automatic reset, if the continuous reset times exceeds the value set by P08.29, the Inverter will report fault and stop to wait for repair. Interval of automatic fault reset: select the interval time from when fault occurred to automatic fault reset actions. After Inverter starts, if no fault occurred during 60s, the fault reset times will be zeroed out.	0	○
P08.29	Automatic fault reset time interval		1.0s	○

Function code	Name	Description	Default value	Modify
		Setting range of P08.28: 0–10 Setting range of P08.29: 0.1–3600.0s		
P08.30	Reduction ratio of droop control	This function code sets the variation rate of the Inverter output frequency based on the load; it is mainly used in balancing the power when multiple motors drive the same load. Setting range: 0.00–50.00Hz	0.00Hz	○
P08.31	Switch-over between motor 1 and motor 2	0x00–0x14 Ones: Switch-over channel 0: Switch over by terminal 1: Switch over by Modbus/Modbus TCP communication 2: Switch over by PROFIBUS/CANopen/DeviceNet 3: Switch over by Ethernet communication 4: Switch over by EtherCAT/PROFINET/EtherNet IP communication Tens: Motor switch over during running 0: Disable switch over during running 1: Enable switch over during running	0x00	◎
P08.32	FDT1 level detection value	When the output frequency exceeds the corresponding frequency of FDT level, multi-function digital output terminal outputs "frequency level detection FDT" signal, this signal will be valid until the output frequency lowers to below the corresponding frequency (FDT level-FDT lag detection value), the waveform is shown in the figure below. 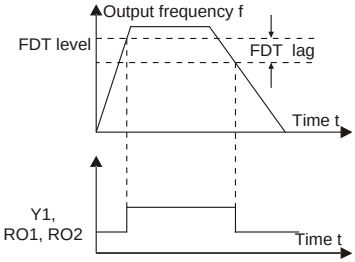 Setting range of P08.32: 0.00Hz–P00.03 (max. output frequency) Setting range of P08.33: 0.0–100.0% (FDT1 level) Setting range of P08.34: 0.00Hz–P00.03 (max. output frequency) Setting range of P08.35: 0.0–100.0% (FDT2 level)	50.00Hz	○
P08.33	FDT1 lag detection value		5.0%	○
P08.34	FDT2 level detection value		50.00Hz	○
P08.35	FDT2 lag detection value		5.0%	○

Function code	Name	Description	Default value	Modify
P08.36	Detection value for frequency arrival	When the output frequency is within the positive /negative detection range of the set frequency, the multi-function digital output terminal outputs "frequency arrival" signal as shown below. 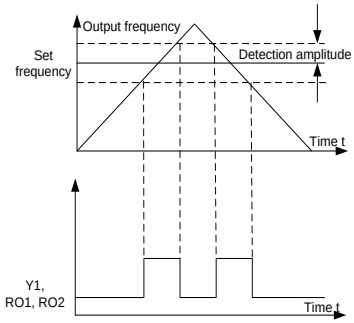 Setting range: 0.00Hz–P00.03 (max. output frequency)	0.00Hz	○
P08.37	Enable/disable energy-consumption brake	0: Disable energy-consumption 1: Enable energy-consumption	1	○
P08.38	Energy-consumption brake threshold voltage	Set the starting bus voltage of energy-consumption brake, adjust this value properly can brake the load effectively. The default value will change with the change of voltage class. Setting range: 200.0–2000.0V	400V voltage: 700.0V;	○
P08.39	Running mode of cooling fan	0: Common running mode 1: The fan keeps running after power up 2. Running mode 2	0	○
P08.40	PWM selection	0x0000–0x1121 Ones place: PWM mode selection 0: PWM mode 1, 3PH modulation and 2PH modulation 1: PWM mode 2, 3PH modulation Tens place: PWM low-speed carrier limit 0: Low-speed carrier limit mode 1 1: Low-speed carrier limit mode 2 2: No limit Hundreds place: Deadzone compensation method 0: Compensation method 1 1: Compensation method 2 Thousands place: PWM loading mode	0x1101	◎

Function code	Name	Description	Default value	Modify
		selection 0: Interruptive loading 1: Normal loading		
P08.41	Overmodulation selection	0x0000–0x1111 Ones place: 0: Disable overmodulation 1: Enable overmodulation Tens place 0: Mild overmodulation 1: Deepened overmodulation Hundreds: Carrier frequency limit 0: Yes 1: No Thousands: Output voltage compensation 0: No 1: Yes	0x1001	◎
P08.42	Reserved	/	/	/
P08.43	Reserved	/	/	/
P08.44	UP/DOWN terminal control setup	0x000–0x221 Ones: Frequency control selection 0: UP/DOWN terminal setup is valid 1: UP/DOWN terminal setup is invalid Tens: Frequency control selection 0: Valid only when P00.06=0 or P00.07=0 1: All frequency modes are valid 2: Invalid for multi-step speed when multi-step speed takes priority Hundreds: Action selection during stop 0: Valid 1: Valid during running, clear after stop 2: Valid during running, clear after receiving stop command	0x000	○
P08.45	UP terminal frequency incremental integral rate	0.01–50.00Hz/s	0.50Hz/s	○
P08.46	DOWN terminal frequency decremental change rate	0.01–50.00Hz/s	0.50Hz/s	○
P08.47	Action selection for frequency setup during power down	0x000–0x111 Ones place: Action selection at power-off during frequency adjusting through digitals. 0: Save the setting at power-off. 1: Clear the setting at power-off.	0x000	○

Function code	Name	Description	Default value	Modify
		Action selection at power-off during frequency adjusting through Modbus/Modbus TCP communication 0: Save the setting at power-off. 1: Clear the setting at power-off. Hundreds place: Action selection at power-off during frequency adjusting through DP communication 0: Save the setting at power-off. 1: Clear the setting at power-off.		
P08.48	High bit of initial value of power consumption	Set the initial value of power consumption. Initial value of power consumption=P08.48×1000+ P08.49 Setting range of P08.48: 0–59999 kWh (k) Setting range of P08.49: 0.0–999.9 kWh	0kWh	○
P08.49	Low bit of initial value of power consumption		0.0kWh	○
P08.50	Flux braking	This function code is used to enable flux braking function. 0: Invalid 100–150: The larger the coefficient, the stronger the brake intensity The Inverter enables motor to decelerate quickly by increasing the motor flux which converts energy generated during braking into thermal energy. The Inverter monitors motor state continuously even during flux braking, thus flux braking can be applied in motor stop or used to change motor speed. The flux braking also carries the following advantages. 1) Brake immediately after sending stop command, removing the need to wait for flux to attenuate. 2) Better cooling effect. During flux braking, the stator current of the motor increases, while the rotor current does not change, while the cooling effect of stator is much more effective than that of the rotor.	0	○
P08.51	Inverter input power factor	This function code is used to adjust the current display value on the AC input side. 0.00–1.00	0.56	○
P08.52	STO lock	0: STO alarm lock Alarm-lock means STO alarm must be reset after state restoration when STO occurs. 1: STO alarm unlock	0	○

Function code	Name	Description	Default value	Modify
		Alarm-unlock means when STO occurs, after state restoration, STO alarm will disappear automatically.		
P08.53	Bias value of upper limit frequency of torque control	0.00 Hz–P00.03 (max. output frequency)	0.00Hz	○
P08.54	Acceleration/deceleration selection of upper limit frequency of torque control	0: No limit on acceleration or deceleration 1: Acceleration/deceleration time 1 2: Acceleration/deceleration time 2 3: Acceleration/deceleration time 3 4: Acceleration/deceleration time 4	0	○
P08.55	Enabling auto carrier frequency reduction	0: Disable 1: Enable **Note:** Automatic carrier frequency reduction indicates that the Inverter automatically reduces the carrier frequency when detecting the heat sink temperature exceeds the rated temperature. When the temperature decreases to a certain degree, the carrier frequency recovers. This function reduces the chance of Inverter overheat alarm.	0	○
P08.56	Min. carrier frequency	0.0–15.0kHz	Depends on model	●
P08.57	Temperature point of auto carrier frequency reduction	40.0–85.0°C	70.0°C	○
P08.58	Interval of carrier frequency reduction	0–30min	10 min	○
P08.59	AI1 disconnection detection threshold	0–100%	0	○
P08.60	AI2 disconnection detection threshold	0–100%	0	○
P08.61	AI3 disconnection	0–100%	0	○

Function code	Name	Description	Default value	Modify
	detection threshold			
P08.62	Output current filter time	0.000–10.000s	0.000s	○
P08.63	Output torque filter times	0–8	8	○

P09 group—PID control

Function code	Name	Description	Default value	Modify
P09.00	PID reference source	When frequency command (P00.06, P00.07) is set to 7, or channel of voltage setup (P04.27) is set to 6, the Inverter running mode is process PID control. This parameter determines the target reference channel of process PID. 0: Set by P09.01 1: AI1 2: AI2 3: AI3 4: High-speed pulse HDIA 5: Multi-step 6: Modbus/Modbus TCP communication 7: PROFIBUS/CANopen/DeviceNet communication 8: Ethernet communication 9: High-speed pulse HDIB 10: EtherCAT/PROFINET/EtherNet IP communication 11: Programmable expansion card 12: Reserved The set target value of process PID is relative value, the set 100% corresponds to 100% of the feedback signal of controlled system. The system operates based on the relative value (0–100.0%)	0	○
P09.01	PID digital setting	Users need to set this parameter when P09.00 is set to 0, the reference value of this parameter is the feedback variable of the system. Setting range: -100.0%–100.0%	0.0%	○
P09.02	PID feedback source	This parameter is used to select PID feedback channel. 0: AI1	0	○

Function code	Name	Description	Default value	Modify
		1: AI2 2: AI3 3: High-speed pulse HDIA 4: Modbus/Modbus TCP communication 5: PROFIBUS/CANopen/DeviceNet communication 6: Ethernet communication 7: High-speed pulse HDIB 8: EtherCAT/PROFINET/EtherNet IP communication 9: Programmable expansion card 10: Reserved **Note:** The reference channel and feedback channel cannot overlap; otherwise, PID cannot be controlled effectively.		
P09.03	PID output characteristics	0: PID output is positive characteristic: namely, the feedback signal is larger than the PID reference, which requires the Inverter output frequency to decrease for PID to reach balance, eg, tension PID control of winding 1: PID output is negative characteristics: namely the feedback signal is less than PID reference, which requires Inverter output frequency to increase for PID to reach balance, eg, tension PID control of unwinding.	0	○
P09.04	Proportional gain (Kp)	This function code is suitable for proportional gain P of PID input. It determines the regulation intensity of the whole PID regulator, the larger the value of P, the stronger the regulation intensity. If this parameter is 100, it means when the deviation between PID feedback and reference is 100%, the regulation amplitude of PID regulator (ignoring integral and differential effect) on output frequency command is the max. frequency (ignoring integral and differential actions). Setting range: 0.00–100.00	1.80	○
P09.05	Integral time (Ti)	This parameter determines the speed of PID adjustor to carry out integral adjustment on the deviation between PID feedback and reference. When the deviation between PID feedback and reference is 100%, the integral adjustor	0.90s	○

Function code	Name	Description	Default value	Modify
		works continuously after the time (ignoring the proportional effect and differential effect) to achieve the max. output frequency (P00.03) or the max. voltage (P04.31). Shorter the integral time is, stronger the regulation intensity is. Setting range: 0.00–10.00s		
P09.06	Differential time (Td)	This parameter determines the strength of the change ratio when PID carries out integral adjustment on the deviation of PID feedback and reference. If the PID feedback changes by 100% during this period, the adjustment of differential regulator (ignoring the proportional effect and differential effect) is the max. output frequency (P00.03) or the max. voltage (P04.31). Longer the derivative time is, stronger the regulation intensity is. Setting range: 0.00–10.00s	0.00s	○
P09.07	Sampling cycle (T)	It means the sampling cycle of feedback. The regulator operates once during each sampling cycle. The larger the sampling cycle, the slower the response. Setting range: 0.001–10.000s	0.001s	○
P09.08	Limit of PID control deviation	It is the max. allowable deviation of PID system output value relative to closed-loop reference value. Within this limit, PID regulator stops regulation. Set this function code properly to regulate the precision and stability of PID system. 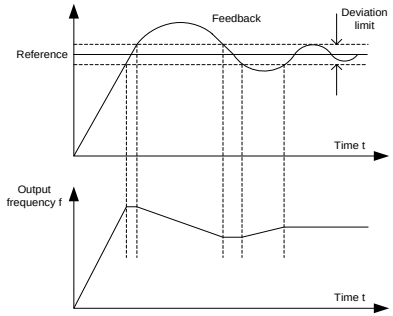 Setting range: 0.0–100.0%	0.0%	○
P09.09	Upper limit value of PID	These two function codes are used to set the upper/lower limit value of PID regulator.	100.0%	○

Function code	Name	Description	Default value	Modify
	output	100.0% corresponds to max. output frequency (P00.03) or max. voltage (P04.31)		
P09.10	Lower limit value of PID output	Setting range of P09.09: P09.10–100.0% Setting range of P09.10: -100.0%–P09.09	0.0%	○
P09.11	Feedback offline detection value	Set PID feedback offline detection value, when the detection value is no more than the feedback offline detection value, and the duration exceeds the value set in P09.12, the Inverter will report "PID feedback offline fault", and keypad displays PIDE.	0.0%	○
P09.12	Feedback offline detection time	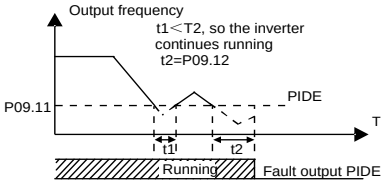 Setting range of P09.11: 0.0–100.0% Setting range of P09.12: 0.0–3600.0s	1.0s	○
P09.13	PID control selection	0x0000–0x1111 Ones: 0: Continue integral control after the frequency reaches upper/lower limit 1: Stop integral control after the frequency reaches upper/lower limit Tens: 0: The same with the main reference direction 1: Contrary to the main reference direction Hundreds: 0: Limit based on the max. frequency 1: Limit based on A frequency Thousands: 0: A+B frequency, acceleration /deceleration of main reference A frequency source buffering is invalid 1: A+B frequency, acceleration/ deceleration of main reference A frequency source buffering is valid, acceleration and deceleration are determined by P08.04 (Acceleration time 4).	0x0001	○
P09.14	Low-frequency proportional gain (Kp)	0.00–100.00 Low-frequency switching point: 5.00Hz, high-frequency switching point: 10.00Hz (P09.04 corresponds to high-frequency parameter), and the middle is the linear interpolation between these two points	1.00	○

Function code	Name	Description	Default value	Modify
P09.15	Acceleration/ deceleration time of PID command	0.0–1000.0s	0.0s	○
P09.16	Filter time of PID output	0.000–10.000s	0.000s	○
P09.17	Reserved			
P09.18	Low-frequency integral time (Ti)	0.00–10.00s	0.90s	○
P09.19	Low-frequency differential time (Td)	0.00–10.00s	0.00s	○
P09.20	Low-frequency point of PID parameter switching	0.00–P09.21	5.00Hz	○
P09.21	High-frequency point of PID parameter switching	P09.20–P00.04	10.00Hz	○
P09.22–P09.28	Reserved	/	/	/

P10 group—Simple PLC and multi-step speed control

Function code	Name	Description	Default value	Modify
P10.00	Simple PLC mode	0: Stop after running once; the Inverter stops automatically after running for one cycle, and it can be started only after receiving running command. 1: Keep running in the final value after running once; The Inverter keeps the running frequency and direction of the last section after a single cycle. 2: Cyclic running; the Inverter enters the next cycle after completing one cycle until receiving stop command and stops.	0	○
P10.01	Simple PLC memory selection	0: No memory after power down 1: Memory after power down; PLC memories its running stage and running frequency before power down.	0	○
P10.02	Multi-step speed 0	Frequency setting range for steps from step 0 to step 15: -300.0–300.0%, 100% corresponds to max. output frequency P00.03. Setting range of the running time in 0th –15th	0.0%	○
P10.03	Running time of step 0		0.0s(min)	○

Function code	Name	Description	Default value	Modify
P10.04	Multi-step speed 1	sections are 0.0–6553.5s (min), the time unit is determined by P10.37. When simple PLC operation is selected, it is required to set P10.02–P10.33 to determine the running frequency and running time of each section. **Note:** The symbol of multi-step speed determines the running direction of simple PLC, and the negative value means reverse running. 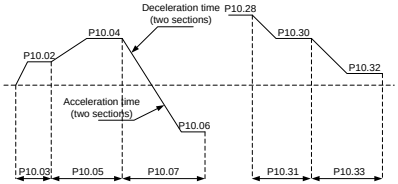 When selecting multi-step speed running, the multi-step speed is within the range of -fmax–fmax, and it can be set continuously. The start/stop of multi-step stop is also determined by P00.01. The S1 IP55 high-ingress protection series Inverter can set 16-step speed, which are set by combined codes of multi-step terminals 1–4 (set by S terminal, correspond to function code P05.01–P05.06) and correspond to multi-step speed 0 to multi-step speed 15. 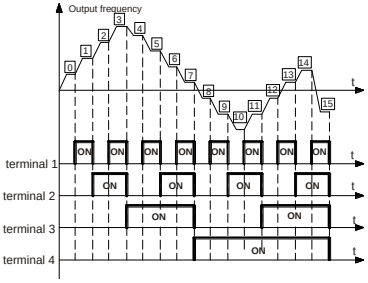 When terminal 1, terminal 2, terminal 3 and terminal 4 are OFF, the frequency input mode is set by P00.06 or P00.07. When terminal 1, terminal 2, terminal 3 and terminal 4 are not all OFF, the frequency set by multi-step speed will prevail, and the priority of multi-step setting is higher than that of the keypad, analog, high-speed pulse, PID, and communication settings. The relation between terminal 1 (T1), terminal 2	0.0%	○
P10.05	Running time of step 1		0.0s(min)	○
P10.06	Multi-step speed 2		0.0%	○
P10.07	Running time of step 2		0.0s(min)	○
P10.08	Multi-step speed 3		0.0%	○
P10.09	Running time of step 3		0.0s(min)	○
P10.10	Multi-step speed 4		0.0%	○
P10.11	Running time of step 4		0.0s(min)	○
P10.12	Multi-step speed 5		0.0%	○
P10.13	Running time of step 5		0.0s(min)	○
P10.14	Multi-step speed 6		0.0%	○
P10.15	Running time of step 6		0.0s(min)	○
P10.16	Multi-step speed 7		0.0%	○
P10.17	Running time of step 7		0.0s(min)	○
P10.18	Multi-step speed 8		0.0%	○
P10.19	Running time of step 8		0.0s(min)	○
P10.20	Multi-step speed 9		0.0%	○
P10.21	Running time of step 9		0.0s(min)	○
P10.22	Multi-step speed 10		0.0%	○
P10.23	Running time of step 10		0.0s(min)	○
P10.24	Multi-step speed 11		0.0%	○
P10.25	Running time of step 11		0.0s(min)	○
P10.26	Multi-step speed 12		0.0%	○

<table>
<tr><th>Function code</th><th>Name</th><th>Description</th><th>Default value</th><th>Modify</th></tr>
<tr><td>P10.27</td><td>Running time of step 12</td><td rowspan="8">(T2), terminal 3 (T3) and terminal 4 (T4) are shown in the table below.
<table>
<tr><td>T1</td><td>OFF</td><td>ON</td><td>OFF</td><td>ON</td><td>OFF</td><td>ON</td><td>OFF</td><td>ON</td></tr>
<tr><td>T 2</td><td>OFF</td><td>OFF</td><td>ON</td><td>ON</td><td>OFF</td><td>OFF</td><td>ON</td><td>ON</td></tr>
<tr><td>T 3</td><td>OFF</td><td>OFF</td><td>OFF</td><td>OFF</td><td>ON</td><td>ON</td><td>ON</td><td>ON</td></tr>
<tr><td>T4</td><td>OFF</td><td>OFF</td><td>OFF</td><td>OFF</td><td>OFF</td><td>OFF</td><td>OFF</td><td>OFF</td></tr>
<tr><td>Step</td><td>0</td><td>1</td><td>2</td><td>3</td><td>4</td><td>5</td><td>6</td><td>7</td></tr>
<tr><td>T1</td><td>OFF</td><td>ON</td><td>OFF</td><td>ON</td><td>OFF</td><td>ON</td><td>OFF</td><td>ON</td></tr>
<tr><td>T 2</td><td>OFF</td><td>OFF</td><td>ON</td><td>ON</td><td>OFF</td><td>OFF</td><td>ON</td><td>ON</td></tr>
<tr><td>T3</td><td>OFF</td><td>OFF</td><td>OFF</td><td>OFF</td><td>ON</td><td>ON</td><td>ON</td><td>ON</td></tr>
<tr><td>T4</td><td>ON</td><td>ON</td><td>ON</td><td>ON</td><td>ON</td><td>ON</td><td>ON</td><td>ON</td></tr>
<tr><td>Step</td><td>8</td><td>9</td><td>10</td><td>11</td><td>12</td><td>13</td><td>14</td><td>15</td></tr>
</table></td><td>0.0s(min)</td><td>○</td></tr>
<tr><td>P10.28</td><td>Multi-step speed 13</td><td>0.0%</td><td>○</td></tr>
<tr><td>P10.29</td><td>Running time of step 13</td><td>0.0s(min)</td><td>○</td></tr>
<tr><td>P10.30</td><td>Multi-step speed 14</td><td>0.0%</td><td>○</td></tr>
<tr><td>P10.31</td><td>Running time of step 14</td><td>0.0s(min)</td><td>○</td></tr>
<tr><td>P10.32</td><td>Multi-step speed 15</td><td>0.0%</td><td>○</td></tr>
<tr><td>P10.33</td><td>Running time of step 15</td><td>0.0s(min)</td><td>○</td></tr>
<tr><td>P10.34</td><td>Acceleration/ deceleration time of step 0 –7 of simple PLC</td><td rowspan="2">Detailed illustration is shown in the table below.
<table>
<tr><th>Function code</th><th colspan="2">Binary</th><th>Step</th><th>ACC/ DEC time 1</th><th>ACC/ DEC time 2</th><th>ACC/ DEC time 3</th><th>ACC/ DEC time 4</th></tr>
<tr><td rowspan="8">P10.34</td><td>BIT1</td><td>BIT0</td><td>0</td><td>00</td><td>01</td><td>10</td><td>11</td></tr>
<tr><td>BIT3</td><td>BIT2</td><td>1</td><td>00</td><td>01</td><td>10</td><td>11</td></tr>
<tr><td>BIT5</td><td>BIT4</td><td>2</td><td>00</td><td>01</td><td>10</td><td>11</td></tr>
<tr><td>BIT7</td><td>BIT6</td><td>3</td><td>00</td><td>01</td><td>10</td><td>11</td></tr>
<tr><td>BIT9</td><td>BIT8</td><td>4</td><td>00</td><td>01</td><td>10</td><td>11</td></tr>
<tr><td>BIT11</td><td>BIT10</td><td>5</td><td>00</td><td>01</td><td>10</td><td>11</td></tr>
<tr><td>BIT13</td><td>BIT12</td><td>6</td><td>00</td><td>01</td><td>10</td><td>11</td></tr>
<tr><td>BIT15</td><td>BIT14</td><td>7</td><td>00</td><td>01</td><td>10</td><td>11</td></tr>
<tr><td rowspan="8">P10.35</td><td>BIT1</td><td>BIT0</td><td>8</td><td>00</td><td>01</td><td>10</td><td>11</td></tr>
<tr><td>BIT3</td><td>BIT2</td><td>9</td><td>00</td><td>01</td><td>10</td><td>11</td></tr>
<tr><td>BIT5</td><td>BIT4</td><td>10</td><td>00</td><td>01</td><td>10</td><td>11</td></tr>
<tr><td>BIT7</td><td>BIT6</td><td>11</td><td>00</td><td>01</td><td>10</td><td>11</td></tr>
<tr><td>BIT9</td><td>BIT8</td><td>12</td><td>00</td><td>01</td><td>10</td><td>11</td></tr>
<tr><td>BIT11</td><td>BIT10</td><td>13</td><td>00</td><td>01</td><td>10</td><td>11</td></tr>
<tr><td>BIT13</td><td>BIT12</td><td>14</td><td>00</td><td>01</td><td>10</td><td>11</td></tr>
<tr><td>BIT15</td><td>BIT14</td><td>15</td><td>00</td><td>01</td><td>10</td><td>11</td></tr>
</table></td><td>0x0000</td><td>○</td></tr>
<tr><td>P10.35</td><td>Acceleration/ deceleration time of step 8 – 15 of simple PLC</td><td>Select corresponding acceleration/deceleration time, and then convert 16-bit binary number into hexadecimal number, finally, set corresponding function code.
Acceleration/deceleration time 1 is set by P00.11 and P00.12; Acceleration/deceleration time 2 is set by P08.00 and P08.01; Acceleration/deceleration time 3 is set by P08.02 and P08.03; Acceleration /deceleration time 4 is set by P08.04 and P08.05.
Setting range: 0x0000–0xFFFF</td><td>0x0000</td><td>○</td></tr>
</table>

Function code	Name	Description	Default value	Modify
P10.36	PLC restart mode	0: Restart from the first step, namely if the Inverter stops during running (caused by stop command, fault or power down), it will run from the first step after restart. 1: Continue running from the step frequency when interruption occurred, namely if the Inverter stops during running (caused by stop command or fault), it will record the running time of current step, and enters this step automatically after restart, then continue running at the frequency defined by this step in the remaining time.	0	◎
P10.37	Multi-step time unit	0: s; the running time of each step is counted in seconds; 1: min; the running time of each step is counted in minutes;	0	◎

P11 group—Protection parameters

Function code	Name	Description	Default value	Modify
P11.00	Phase-loss protection	0x000–0x111 Ones: 0: Disable software input phase loss protection 1: Enable software input phase loss protection Tens: 0: Disable output phase loss protection 1: Enable output phase loss protection Hundreds: 0: Disable hardware input phase loss protection 1: Enable hardware input phase loss protection	0x110	○
P11.01	Frequency-drop at transient power down	0: Disable 1: Enable	0	○
P11.02	Dynamic braking in standby state	0: Enable 1: Disable	0	◎
P11.03	Overvoltage stall protection	0: Disable 1: Enable	1	○

Function code	Name	Description	Default value	Modify
		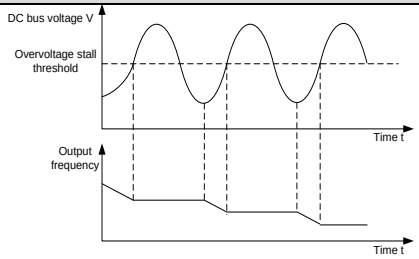		
P11.04	Overvoltage stall protection voltage	120–150% (standard bus voltage) (400V)	136%	○
P11.05	Current-limit selection	During accelerated running, as the load is too large, the actual acceleration rate of motor is lower than that of output frequency, if no measures are taken, the Inverter may trip due to overcurrent during acceleration. 0x00–0x11 Ones: Current-limit action selection 0: Invalid 1: Always valid Tens: Hardware current-limit overload alarm selection 0: Valid 1: Invalid	01	◎
P11.06	Automatic current-limit level	Current-limit protection function detects output current during running, and compares it with the current-limit level defined by P11.06, if it exceeds the current-limit level, the Inverter will run at stable frequency during accelerated running, or run in decreased frequency during constant-speed running; if it exceeds the current-limit level continuously, the Inverter output frequency will drop continuously until reaching lower limit frequency. When the output current is detected to be lower than the current-limit level again, it will continue accelerated running.	ND: 160.0% LD: 120.0%	◎
P11.07	Frequency-drop rate during current limit		10.00 Hz/s	◎

Function code	Name	Description	Default value	Modify
		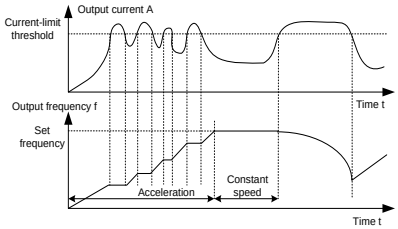 Setting range of P11.06: 50.0–200.0% (of the rated Inverter output current) Setting range of P11.07: 0.00–50.00Hz/s		
P11.08	Inverter or motor overload/ underload pre-alarm	0x000–0x1134 Ones place: 0: Motor overload/underload pre-alarm, relative to rated motor current 1: Inverter overload/underload pre-alarm, relative to rated Inverter output current 2: Inverter output torque overload/underload pre-alarm, relative to rated motor torque 3: Motor overload/underload pre-alarm. The overload is relative to the motor rated current; while the underload is relative to the motor rated power. 4: Inverter overload/underload pre-alarm. The overload is relative to the inverter rated current; while the underload is relative to the inverter rated power. Tens place: 0: The Inverter continues running after overload/underload alarm. 1: The Inverter continues running after underload alarm, and stops running after overload fault. 2: The Inverter continues running after overload alarm, and stops running after underload fault. 3: The Inverter stops running after overload/underload fault. Hundreds place: 0: Always detect 1: Detect during constant-speed running Thousands place: Inverter overload current reference selection 0: Related to current calibration coefficient 1: Unrelated to current calibration coefficient	0x000	○

Function code	Name	Description	Default value	Modify
P11.09	Overload pre-alarm detection level	If the Inverter or motor output current is larger than the overload pre-alarm detection level (P11.09), and the duration exceeds the overload pre-alarm detection time (P11.10), overload pre-alarm signal will be outputted. 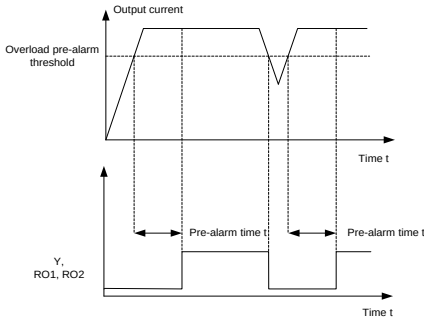 Setting range of P11.09: P11.11–200% (relative value determined by the ones place of P11.08) Setting range of P11.10: 0.1–3600.0s	ND: 150% LD: 120%	○
P11.10	Overload pre-alarm detection time		1.0s	○
P11.11	Underload pre-alarm detection level	Underload pre-alarm signal will be outputted if the output current of the Inverter or motor is lower than underload pre-alarm detection level (P11.11), and the duration exceeds underload pre-alarm detection time (P11.12). Setting range of P11.11: 0– P11.09 (relative value determined by the ones place of P11.08) Setting range of P11.12: 0.1–3600.0s	50%	○
P11.12	Underload pre-alarm detection time		1.0s	○
P11.13	Fault output terminal action during fault	This function code is used to set the action of fault output terminals during undervoltage and fault reset. 0x00–0x11 Ones: 0: Act during undervoltage fault 1: Do not act during undervoltage fault Tens: 0: Act during fault reset 1: Do not act during fault reset	0x00	○
P11.14	Speed deviation detection value	0.0–50.0% This parameter is used to set the speed deviation detection value.	10.0%	○
P11.15	Speed deviation	0.0–10.0s This parameter is used to set the speed	2.0s	○

Function code	Name	Description	Default value	Modify
	detection time	deviation detection time. **Note:** Speed deviation protection will be invalid if P11.15 is set to 0.0. 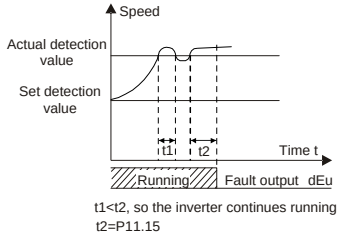 Setting range: 0.0–10.0s		
P11.16	Automatic frequency-reduction during voltage drop	0–1 0: Invalid 1: Valid	0	○
P11.17	Proportional coefficient of voltage regulator during undervoltage stall	0–1000	100	○
P11.18	Integral coefficient of voltage regulator during undervoltage stall	0–1000	40	○
P11.19	Proportional coefficient of current regulator during undervoltage stall	0–1000	25	○
P11.20	Integral coefficient of current regulator during undervoltage stall	0–2000	150	○
P11.21	Proportional	0–1000	60	○

Function code	Name	Description	Default value	Modify
	coefficient of voltage regulator during overvoltage stall			
P11.22	Integral coefficient of voltage regulator during overvoltage stall	0–1000	10	○
P11.23	Proportional coefficient of current regulator during overvoltage stall	0–1000	60	○
P11.24	Integral coefficient of current regulator during overvoltage stall	0–2000	250	○
P11.25	Enable Inverter overload integral	0: Disable 1: Enable	0	◎
P11.26	Reserved	/	/	/
P11.27	VF vibration control method	0x00–0x11 Ones place: 0: Method 1 1: Method 2 Tens place: 0: Reserved 1: Reserved	0x00	◎
P11.28	SPO switch-on detection delay time	0.0–60.0s **Note:** The SPO detection is started only after the Inverter runs for the delay time P11.28 to avoid false alarms caused by the unstable frequency.	5.0s	○
P11.29	SPO	0–10	6	○

Function code	Name	Description	Default value	Modify
	unbalance factor			
P11.30	Reserved	0	0	●
P11.31	Fault severity group 1	0x0000–0x3333 Thousands place/Hundreds place/Tens place/Ones place: 0: Report the fault 1: Report the fault after deceleration to stop 2: Pre-alarm, with the action executed according to P11.51 3: Screen out the fault Note: Different fault actions are taken for different fault severities. The first 10 faults are not grouped by severity, but each four of the subsequent faults are grouped by severity in ascending order from right to left in hexadecimal format, that is, from the ones place to the thousands place (for example, the ones place of fault severity group 1 corresponds to fault 11). Group 1: Faults 11–14 (OL1, OL2, SPI, SPO) Group 2: Faults 15–18 (OH1, OH2, EF, CE) Group 3: Faults 19–22 (ItE, tE, EEP, PIDE) Group 4: Faults 23–26 (bCE, END, OL3, PCE) Group 5: Faults 27–30 (UPE, DNE, E-DP, E-NET) Group 6: Faults 31–34 (E-CAN, ETH1, ETH2, dEu) Group 7: Faults 35–38 (STo, LL, ENC1o, ENC1d) Group 8: Faults 39–42 (ENC1Z, STO, STL1, STL2) Group 9: Faults 43–46 (STL3, CrCE, P-E1, P-E2) Group 10: Faults 47–50 (P-E3, P-E4, P-E5, P-E6) Group 11: Faults 51–54 (P-E7, P-E8, P-E9, P-E10) Group 12: Faults 55–58 (E-Err, ENCU, E-PN, SECAN) Group 13: Faults 59–62 (OT, F1-Er, F2-Er, F3-Er) Group 14: Faults 63–66 (C1-Er, C2-Er, C3-Er, E-CAT) Group 15: Faults 67–70 (E-BAC, E-DEV, S-Err, OtE1) Group 16: Faults 71–75 (OtE2, E-EIP, E-PAO,	0x0000	○
P11.32	Fault severity group 2		0x0000	○
P11.33	Fault severity group 3		0x0000	○
P11.34	Fault severity group 4		0x0000	○
P11.35	Fault severity group 5		0x0000	○
P11.36	Fault severity group 6		0x0000	○
P11.37	Fault severity group 7		0x0000	○
P11.38	Fault severity group 8		0x0000	○
P11.39	Fault severity group 9		0x0000	○
P11.40	Fault severity group 10		0x0000	○
P11.41	Fault severity group 11		0x0000	○
P11.42	Fault severity group 12		0x0000	○
P11.43	Fault severity group 13		0x0000	○
P11.44	Fault severity group 14		0x0000	○
P11.45	Fault severity group 15		0x0000	○
P11.46	Fault severity group 16		0x0000	○
P11.47	Fault severity group 17		0x0000	○
P11.48	Fault severity group 18		0x0000	○
P11.49	Fault severity group 19		0x0000	○
P11.50	Fault severity group 20		0x0000	○

Function code	Name	Description	Default value	Modify
		E-AI1) Group 17: Faults 75–78 (E-AI2, E-AI3, Reserved, Reserved) Group 18: Faults 79–82 (Reserved, Reserved, Reserved, Reserved) Group 19: Faults 83–86 (Reserved, Reserved, Reserved, Reserved) Group 20: Faults 87–90 (Reserved, Reserved, Reserved, Reserved)		
P11.51	Action for fault pre-alarm	0–4 0: Run at the set frequency 1: Run at the output frequency at the time of fault 2: Run at the frequency upper limit 3: Run at the frequency lower limit 4: Run at the frequency reserved for exception	0	○
P11.52	Frequency reserved for exception	0.00–630.00(Hz)	0.00Hz	○
P11.53	Fire mode function	0–2 0: Invalid 1: Fire mode 1 2: Fire mode 2 When P11.53=0, the fire mode is invalid, and the normal running mode is used. In this case, the Inverter stops when encountering a fault. When the fire mode function is valid, the Inverter runs at the speed specified by P11.54. When fire mode 1 is selected, the Inverter always runs except when the Inverter has been damaged. When fire mode 2 is selected, the Inverter always runs, but the Inverter stops when encountering OUT1, OUT2, OUT3, OC1, OC2, OC3, OV1, OV2, OV3, or SPO. **Note:** Terminal control must be used for a fire mode. When the fire mode has lasted 5 minutes, it is reset, and no warranty of repair is processed.	0	◎
P11.54	Running frequency in fire mode	0.00Hz–P00.03 (Max. output frequency)	50.00Hz	○
P11.55	Fire mode flag	0–1 **Note:** When the fire mode has lasted 5 minutes, it is reset, and no warranty of repair is processed.	0	●

Function code	Name	Description	Default value	Modify
P11.56–P11.69	Reserved	/	/	/

P12 group—Parameters of motor 2

Function code	Name	Description	Default value	Modify
P12.00	Type of motor 2	0: Asynchronous motor 1: Synchronous motor	0	◎
P12.01	Rated power of asynchronous motor 2	0.1–3000.0kW	Depend on model	◎
P12.02	Rated frequency of asynchronous motor 2	0.01Hz–P00.03 (max. output frequency)	50.00Hz	◎
P12.03	Rated speed of asynchronous motor 2	1–60000rpm	Depend on model	◎
P12.04	Rated voltage of asynchronous motor 2	0–1200V	Depend on model	◎
P12.05	Rated current of asynchronous motor 2	0.8–6000.0A	Depend on model	◎
P12.06	Stator resistance of asynchronous motor 2	0.001–65.535Ω	Depend on model	○
P12.07	Rotor resistance of asynchronous motor 2	0.001–65.535Ω	Depend on model	○
P12.08	Leakage inductance of asynchronous motor 2	0.1–6553.5mH	Depend on model	○
P12.09	Mutual inductance of asynchronous motor 2	0.1–6553.5mH	Depend on model	○
P12.10	No-load current of asynchronous motor 2	0.1–6553.5A	Depend on model	○
P12.11	Magnetic saturation coefficient 1 of iron core of asynchronous motor 2	0.0–100.0%	80%	○
P12.12	Magnetic	0.0–100.0%	68%	○

Function code	Name	Description	Default value	Modify
	saturation coefficient 2 of iron core of asynchronous motor 2			
P12.13	Magnetic saturation coefficient 3 of iron core of asynchronous motor 2	0.0–100.0%	57%	○
P12.14	Magnetic saturation coefficient 4 of iron core of asynchronous motor 2	0.0–100.0%	40%	○
P12.15	Rated power of synchronous motor 2	0.1–3000.0kW	Depend on model	◎
P12.16	Rated frequency of synchronous motor 2	0.01Hz–P00.03 (max. output frequency)	50.00Hz	◎
P12.17	Number of pole pairs of synchronous motor 2	1–128	2	◎
P12.18	Rated voltage of synchronous motor 2	0–1200V	Depend on model	◎
P12.19	Rated voltage of synchronous motor 2	0.8–6000.0A	Depend on model	◎
P12.20	Stator resistance of synchronous motor 2	0.001–65.535Ω	Depend on model	○
P12.21	Direct-axis inductance of synchronous motor 2	0.01–655.35mH	Depend on model	○
P12.22	Quadrature-axis inductance of synchronous motor 2	0.01–655.35mH	Depend on model	○
P12.23	Counter-emf constant of	0–10000V	300	○

Function code	Name	Description	Default value	Modify
	synchronous motor 2			
P12.24	Initial pole position of synchronous motor 2	0x0000–0xFFFF	0x0000	●
P12.25	Identification current of synchronous motor 2	0%–50% (rated motor current)	10%	●
P12.26	Overload protection of motor 2	0: No protection 1: Common motor (with low-speed compensation) 2: Frequency-variable motor (without low-speed compensation)	2	◎
P12.27	Overload protection coefficient of motor 2	Motor overload multiples M = Iout/(In×K) In is rated motor current, Iout is Inverter output current, K is motor overload protection coefficient. The smaller the K, the larger the value of M, the easier the protection. M=116%: Protection will be applied when the motor overloads for 1h; M=150%: Protection will be applied when the motor overloads for 12min; M=180%: Protection will be applied when the motor overloads for 5min; M>=400%: Protection will be applied immediately. 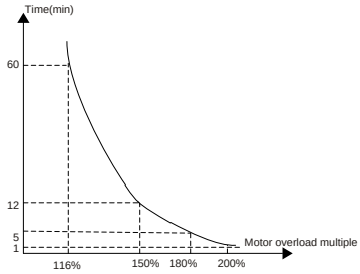 Setting range: 20.0%–120.0%	100.0%	○
P12.28	Power display calibration coefficient of motor 2	0.00–3.00	1.00	○

Function code	Name	Description	Default value	Modify
P12.29	Parameter display of motor 2	0: Display based on the motor type; under this mode, only parameters related to current motor type will be displayed. 1: Display all; under this mode, all the parameters will be displayed.	0	○
P12.30	System inertia of motor 2	0.000–30.000kgm^2	0.000 kgm^2	○
P12.31–P12.32	Reserved	/	/	/

P13 group—Control parameters of synchronous motor

Function code	Name	Description	Default value	Modify
P13.00	Reduction rate of the injection current of synchronous motor	0.0%–100.0% rated motor current	80.0%	○
P13.01	Initial pole detection mode	0: No detection 1: High-frequency current injection 2: Pulse superimposition	0	◎
P13.02	Pull-in current 1	Pull-in current is the pole position orientation current; pull-in current 1 is valid within the lower limit of pull-in current switch-over frequency threshold. If users need to increase the starting torque, increase the value of this function code properly. Setting range: 0.0%–100.0% (rated motor current)	20.0%	○
P13.03	Pull-in current 2	Pull-in current is the pole position orientation current; pull-in current 2 is valid within the upper limit of pull-in current switch-over frequency threshold, and users do not need to change pull-in current 2 under common situations. Setting range: 0.0%–100.0% (rated motor current)	10.0%	○
P13.04	Switch-over frequency of pull-in current	0.00Hz–200.0% (of the motor rated current)	20.0%	○
P13.05	High-frequency superposition frequency	200Hz–1000Hz	500	◎
P13.06	High-frequency superposition voltage	0.0–300.0% rated motor voltage	100.0%	◎

Function code	Name	Description	Default value	Modify
P13.07	Control parameter 0	0.0–400.0	0.0	○
P13.08	Control parameter 1	0x0000–0xFFFF	0x0000	○
P13.09	Frequency threshold of phase-lock loop switch-in	This parameter is used to set the frequency threshold for enabling the counter-electromotive force phase-locked loop in SVC 0. When the running frequency is lower than the value of this parameter, the phase-locked loop is disabled; and when the running frequency is higher than that, the phase-locked loop is enabled. Setting range: 0.00–655.35	50.00	○
P13.10	Initial compensation angle of SM	0.0–359.9	0.0	○
P13.11	Maladjustment detection time	This parameter is used to adjust the responsiveness of anti-maladjustment function. If the load inertia is large, increase the value of this parameter properly, however, the responsiveness may slow down accordingly. Setting range: 0.0–10.0s	0.5s	○
P13.12	High-frequency compensation coefficient of synchronous motor	This parameter is valid when the motor speed exceeds the rated speed. If motor oscillation occurred, adjust this parameter properly. Setting range: 0.0–100.0%	0.0	○
P13.13	High-frequency injection current	0–300.0% (of the rated Inverter output current)	20.0%	◎

P14 group—Serial communication function

Function code	Name	Description	Default value	Modify
P14.00	Local communication address	Setting range: 1–247 When the master is writing frames, and the slave communication address is set to 0, it is the broadcast communication address, and all the slaves on the Modbus bus will accept this frame, but the slave never responds. Local communication address is unique in the communication network, which is the basis for point-to-point communication between the upper computer and the Inverter. **Note:** The slave address cannot be set to 0.	1	○

Function code	Name	Description	Default value	Modify
P14.01	Communication baud rate setup	This parameter is used to set the data transmission speed between upper computer and the Inverter. 0: 1200BPS 1: 2400BPS 2: 4800BPS 3: 9600BPS 4: 19200BPS 5: 38400BPS 6: 57600BPS 7: 115200BPS **Note:** Baud rate of the upper computer must be the same with the Inverter; otherwise, communication cannot be performed. The larger the baud rate, the faster the communication speed.	4	○
P14.02	Data bit check setup	The data format of upper computer must be the same with the Inverter; otherwise, communication cannot be performed. 0: No parity check (N, 8, 1) for RTU 1: Even parity (E, 8, 1) for RTU 2: Odd parity (O, 8, 1) for RTU 3: No parity check (N, 8, 2) for RTU 4: Even parity (E, 8, 2) for RTU 5: Odd parity (O, 8, 2) for RTU	1	○
P14.03	Communication response delay	0–200ms It refers to the time interval from when the data is received by the Inverter to the moment when the data is sent to the upper computer. If the response delay is less than the system processing time, the response delay will be subject to system processing time; if the response delay is longer than the system processing time, data will be sent to the upper computer at a delay after data process is done by system.	5ms	○
P14.04	RS485 communication timeout period	0.0 (invalid) –60.0s This parameter will be invalid if it is set to 0.0; When it is set to a non-zero value, if the time interval between current communication and the next communication exceeds the communication timeout period, the system will report " Modbus/Modbus TCP communication fault" (CE). Under common situations, it is set to 0.0. In systems which have continuous	0.0s	○

Function code	Name	Description	Default value	Modify
		communication, users can monitor the communication condition by setting this parameter.		
P14.05	Transmission error processing	0: Alarm and coast to stop 1: Do not alarm and continue running 2: Do not alarm and stop as per the stop mode (under communication control mode only) 3: Do not alarm and stop as per the stop mode (under all control modes)	0	○
P14.06	Communication processing action	0x000–0x111 Ones: 0: Write operation has response 1: Write operation has no response Tens: 0: Communication password protection is invalid 1: Communication password protection is valid Hundreds place: Valid only for RS485 communication 0: User-defined addresses specified by P14.07 and P14.08 are invalid 1: User-defined addresses specified by P14.07 and P14.08 are valid	0x000	○
P14.07	User-defined running command address	0x0000–0xFFFF	0x2000	○
P14.08	User-defined frequency setting address	0x0000–0xFFFF	0x2001	○
P14.09	Modbus TCP communication timeout time	0.0–60.0s	5.0s	○
P14.10	Enabling program upgrade through RS485	0–1 0: Disable 1: Enable	0	◎
P14.11	Bootloader software version	0.00–655.35	0.00	●
P14.12	Displaying no upgrade bootloader fault	0–1 0: Display 1: Do not display	0	○
P14.13–P14.47	Reserved	0–65535	0	●

Function code	Name	Description	Default value	Modify
P14.48	Channel selection for mapping between PZDs and function codes	0x00–0x12 Ones place: Channel for mapping function codes to PZDs 0: Reserved 1: Group P15 2: Group P16 Tens place: Save function at power failure 0: Disable 1: Enable	0x12	○
P14.49	Mapped function code of received PZD2	0x0000–0xFFFF	0x0000	○
P14.50	Mapped function code of received PZD3	0x0000–0xFFFF	0x0000	○
P14.51	Mapped function code of received PZD4	0x0000–0xFFFF	0x0000	○
P14.52	Mapped function code of received PZD5	0x0000–0xFFFF	0x0000	○
P14.53	Mapped function code of received PZD6	0x0000–0xFFFF	0x0000	○
P14.54	Mapped function code of received PZD7	0x0000–0xFFFF	0x0000	○
P14.55	Mapped function code of received PZD8	0x0000–0xFFFF	0x0000	○
P14.56	Mapped function code of received PZD9	0x0000–0xFFFF	0x0000	○
P14.57	Mapped function code of received PZD10	0x0000–0xFFFF	0x0000	○
P14.58	Mapped function code of received PZD11	0x0000–0xFFFF	0x0000	○
P14.59	Mapped function code of received PZD12	0x0000–0xFFFF	0x0000	○
P14.60	Mapped function code of sent PZD2	0x0000–0xFFFF	0x0000	○

Function code	Name	Description	Default value	Modify
P14.61	Mapped function code of sent PZD3	0x0000–0xFFFF	0x0000	○
P14.62	Mapped function code of sent PZD4	0x0000–0xFFFF	0x0000	○
P14.63	Mapped function code of sent PZD5	0x0000–0xFFFF	0x0000	○
P14.64	Mapped function code of sent PZD6	0x0000–0xFFFF	0x0000	○
P14.65	Mapped function code of sent PZD7	0x0000–0xFFFF	0x0000	○
P14.66	Mapped function code of sent PZD8	0x0000–0xFFFF	0x0000	○
P14.67	Mapped function code of sent PZD9	0x0000–0xFFFF	0x0000	○
P14.68	Mapped function code of sent PZD10	0x0000–0xFFFF	0x0000	○
P14.69	Mapped function code of sent PZD11	0x0000–0xFFFF	0x0000	○
P14.70	Mapped function code of sent PZD12	0x0000–0xFFFF	0x0000	○

P15 group—Functions of communication expansion card 1

Function code	Name	Description	Default value	Modify
P15.00	Reserved	/	/	/
P15.01	Module address	0–127	2	◎
P15.02	Received PZD2	0–31 0: Invalid 1: Set frequency (0–Fmax. Unit: 0.01Hz) 2: PID reference (-1000–1000, in which 1000 corresponds to 100.0%) 3: PID feedback (-1000–1000, in which 1000 corresponds to 100.0%)	0	○
P15.03	Received PZD3		0	○
P15.04	Received PZD4		0	○
P15.05	Received PZD5		0	○
P15.06	Received PZD6		0	○

Function code	Name	Description	Default value	Modify
P15.07	Received PZD7	4: Torque setting (-3000–+3000, in which 1000 corresponds to 100.0% of the motor rated current) 5: Setting of the upper limit of forward running frequency (0–Fmax. Unit: 0.01 Hz) 6: Setting of the upper limit of reverse running frequency (0–Fmax. Unit: 0.01 Hz) 7: Upper limit of electromotive torque (0–3000, in which 1000 corresponds to 100.0% of the motor rated current) 8: Upper limit of braking torque (0–3000, in which 1000 corresponds to 100% of the motor rated current) 9: Virtual input terminal command (Range: 0x000–0x3FF, corresponding to S8/S7/S6/S5/HDIB/HDIA/S4/S3/S2/S1) 10: Virtual output terminal command (Range: 0x00–0x0F, corresponding to RO2/RO1/HDO/Y1) 11: Voltage setting (special for V/F separation) (0–1000, in which 1000 corresponds to 100% of the motor rated voltage) 12: AO1 output setting 1 (-1000–+1000, in which 1000 corresponds to 100.0%) 13: AO2 output setting 2 (-1000–1000, in which 1000 corresponds to 100.0%) 14: High-order bit of position reference (signed) 15: Low-order bit of position reference (unsigned) 16: High-order bit of position feedback (signed) 17: Low-order bit of position feedback (unsigned) 18: Position feedback setting flag (position feedback can be set only after this flag is set to 1 and then to 0) 19: Function parameter mapping (PZD2–PZD12 correspond to P14.49–P14.59) 20–31: Reserved	0	○
P15.08	Received PZD8		0	○
P15.09	Received PZD9		0	○
P15.10	Received PZD10		0	○
P15.11	Received PZD11		0	○
P15.12	Received PZD12		0	○
P15.13	Sent PZD2	0–31 0: Invalid 1: Running frequency (x100, Hz) 2: Set frequency (x100, Hz) 3: Bus voltage (x10, V)	0	○
P15.14	Sent PZD3		0	○
P15.15	Sent PZD4		0	○
P15.16	Sent PZD5		0	○

Function code	Name	Description	Default value	Modify
P15.17	Sent PZD6	4: Output voltage (x1, V) 5: Output current (x10, A) 6: Actual output torque (x10, %) 7: Actual output power (x10, %) 8: Rotation speed of running (x1, RPM) 9: Linear speed of running (x1, m/s) 10: Ramp reference frequency 11: Fault code 12: AI1 input (x100, V) 13: AI2 input (x100, V) 14: AI3 input (x100, V) 15: HDIA frequency value (x100, kHz) 16: Terminal input status 17: Terminal output status 18: PID reference (x100, %) 19: PID feedback (x100, %) 20: Motor rated torque 21: High-order bit of position reference (signed) 22: Low-order bit of position reference (unsigned) 23: High-order bit of position feedback (signed) 24: Low-order bit of position feedback (unsigned) 25: Status word 26: HDIB frequency value (x100, kHz) 27: High-order bit of PG card pulse feedback 28: Low-order bit of PG card pulse feedback 29: High-order bit of PG card pulse reference 30: Low-order bit of PG card pulse reference 31: Function parameter mapping (PZD2–PZD12 correspond to P14.60–P14.70)	0	○
P15.18	Sent PZD7		0	○
P15.19	Sent PZD8		0	○
P15.20	Sent PZD9		0	○
P15.21	Sent PZD10		0	○
P15.22	Sent PZD11		0	○
P15.23	Sent PZD12		0	○
P15.24	Reserved	/	/	/
P15.25	DP communication timeout time	0.0 (invalid)–60.0s	5.0	○
P15.26	CANopen communication timeout time	0.0 (invalid)–60.0s	5.0	○
P15.27	CANopen communication baud rate	0–7 0: 1000kbps 1: 800kbps	3	◎

Function code	Name	Description	Default value	Modify
		2: 500kbps 3: 250kbps 4: 125kbps 5: 100kbps 6: 50kbps 7: 20kbps		
P15.28	Master/slave CAN communication address	0–127	1	◎
P15.29	Master/slave CAN communication baud rate selection	0: 50Kbps 1: 100 Kbps 2: 125Kbps 3: 250Kbps 4: 500Kbps 5: 1M bps	2	◎
P15.30	Master/slave CAN communication timeout period	0.0 (invalid)–300.0s	5.0s	○
P15.31–P15.42	Reserved	/	/	/
P15.43	Communication control word expression format	0–1 0: Decimal format 1: Binary format	0	◎

P16 group—Functions of communication expansion card 2

Function code	Name	Description	Default value	Modify
P16.00	Reserved		/	/
P16.01	Reserved	/	/	/
P16.02	Ethernet monitoring card IP address 1	0–255	192	◎
P16.03	Ethernet monitoring card IP address 2	0–255	168	◎
P16.04	Ethernet monitoring card IP address 3	0–255	0	◎
P16.05	Ethernet monitoring card IP address 4	0–255	1	◎
P16.06	Ethernet monitoring card subnet mask 1	0–255	255	◎

Function code	Name	Description	Default value	Modify
P16.07	Ethernet monitoring card subnet mask 2	0–255	255	◎
P16.08	Ethernet monitoring card subnet mask 3	0–255	255	◎
P16.09	Ethernet monitoring card subnet mask 4	0–255	0	◎
P16.10	Ethernet monitoring card gateway 1	0–255	192	◎
P16.11	Ethernet monitoring card gateway 2	0–255	168	◎
P16.12	Ethernet monitoring card gateway 3	0–255	0	◎
P16.13	Ethernet monitoring card gateway 4	0–255	1	◎
P16.14	Ethernet monitoring variable address 1	0x0000–0xFFFF	0x0000	○
P16.15	Ethernet monitoring variable address 2	0x0000–0xFFFF	0x0000	○
P16.16	Ethernet monitoring variable address 3	0x0000–0xFFFF	0x0000	○
P16.17	Ethernet monitoring variable address 4	0x0000–0xFFFF	0x0000	○
P16.18–P16.23	Reserved	/	/	/
P16.24	Identification time for the expansion card in card slot 1	0.0–600.0s If it is set to 0.0, identification fault will not be detected	0.0s	○
P16.25	Identification time for the expansion card in card slot 2	0.0–600.0s If it is set to 0.0, offline fault will not be detected	0.0s	○
P16.26	Identification time for the expansion card in card slot 3	0.0–600.0s If it is set to 0.0, offline fault will not be detected	0.0s	○

Function code	Name	Description	Default value	Modify
P16.27	Communication timeout period of expansion card in card slot 1	0.0–600.0s If it is set to 0.0, offline fault will not be detected	0.0s	○
P16.28	Communication timeout period of expansion card in card slot 2	0.0–600.0s If it is set to 0.0, offline fault will not be detected	0.0s	○
P16.29	Communication timeout period of expansion card in card slot 3	0.0–600.0s If it is set to 0.0, offline fault will not be detected	0.0s	○
P16.30	Reserved	/	/	/
P16.31	PROFINET communication timeout time	0.0–60.0s	5.0s	○
P16.32	Received PZD2	0–31 0: Invalid 1: Set frequency (0–Fmax. Unit: 0.01Hz) 2: PID reference (-1000–1000, in which 1000 corresponds to 100.0%) 3: PID feedback (-1000–1000, in which 1000 corresponds to 100.0%) 4: Torque setting (-3000–+3000, in which 1000 corresponds to 100.0% of the motor rated current) 5: Setting of the upper limit of forward running frequency (0–Fmax. Unit: 0.01 Hz) 6: Setting of the upper limit of reverse running frequency (0–Fmax. Unit: 0.01 Hz) 7: Upper limit of electromotive torque (0–3000, in which 1000 corresponds to 100.0% of the motor rated current) 8: Upper limit of braking torque (0–3000, in which 1000 corresponds to 100% of the motor rated current) 9: Virtual input terminal command (Range: 0x000–0x3FF, corresponding to S8/S7/S6/S5/HDIB/HDIA/S4/S3/S2/S1) 10: Virtual output terminal command (Range: 0x00–0x0F, corresponding to RO2/RO1/HDO/Y1) 11: Voltage setting (special for V/F separation) (0–1000, in which 1000 corresponds to	0	○
P16.33	Received PZD3		0	○
P16.34	Received PZD4		0	○
P16.35	Received PZD5		0	○
P16.36	Received PZD6		0	○
P16.37	Received PZD7		0	○
P16.38	Received PZD8		0	○
P16.39	Received PZD9		0	○
P16.40	Received PZD10		0	○
P16.41	Received PZD11		0	○
P16.42	Received PZD12		0	○

Function code	Name	Description	Default value	Modify
		100% of the motor rated voltage) 12: AO1 output setting 1 (-1000–+1000, in which 1000 corresponds to 100.0%) 13: AO2 output setting 2 (-1000–1000, in which 1000 corresponds to 100.0%) 14: High-order bit of position reference (signed) 15: Low-order bit of position reference (unsigned) 16: High-order bit of position feedback (signed) 17: Low-order bit of position feedback (unsigned) 18: Position feedback setting flag (position feedback can be set only after this flag is set to 1 and then to 0) 19: Function parameter mapping (PZD2–PZD12 correspond to P14.49–P14.59) 20–31: Reserved		
P16.43	Sent PZD2	0–31 0: Invalid 1: Running frequency (x100, Hz) 2: Set frequency (x100, Hz) 3: Bus voltage (x10, V) 4: Output voltage (x1, V) 5: Output current (x10, A) 6: Actual output torque (x10, %) 7: Actual output power (x10, %) 8: Rotation speed of running (x1, rpm) 9: Linear speed of running (x1, m/s) 10: Ramp reference frequency 11: Fault code 12: AI1 input (x100, V) 13: AI2 input (x100, V) 14: AI3 input (x100, V) 15: HDIA frequency value (x100, kHz) 16: Terminal input status 17: Terminal output status 18: PID reference (x100, %) 19: PID feedback (x100, %) 20: Motor rated torque 21: High-order bit of position reference (signed) 22: Low-order bit of position reference (unsigned) 23: High-order bit of position feedback	0	○
P16.44	Sent PZD3		0	○
P16.45	Sent PZD4		0	○
P16.46	Sent PZD5		0	○
P16.47	Sent PZD6		0	○
P16.48	Sent PZD7		0	○
P16.49	Sent PZD8		0	○
P16.50	Sent PZD9		0	○
P16.51	Sent PZD10		0	○
P16.52	Sent PZD11		0	○
P16.53	Sent PZD12		0	○

Function code	Name	Description	Default value	Modify
		(signed) 24: Low-order bit of position feedback (unsigned) 25: Status word 26: HDIB frequency value (x100, kHz) 27: High-order bit of PG card pulse feedback 28: Low-order bit of PG card pulse feedback 29: High-order bit of PG card pulse reference 30: Low-order bit of PG card pulse reference 31: Function parameter mapping (PZD2–PZD12 correspond to P14.60–P14.70)		
P16.54	Ethernet IP communication timeout time	0.0–60.0s	5.0s	○
P16.55	Ethernet IP communication rate	0–4 0: Self-adaptive 1: 100M full-duplex 2: 100M half-duplex 3: 10M full-duplex 4: 10M half-duplex	0	◎
P16.56	Bluetooth pairing code	0–65535	0	●
P16.57	Bluetooth host type	0–65535 0: No host connection 1: Mobile APP 2: Bluetooth box 3–65535: Reserved	0	●
P16.58	Industrial Ethernet communication card IP address 1	0–255	192	◎
P16.59	Industrial Ethernet communication card IP address 2	0–255	168	◎
P16.60	Industrial Ethernet communication card IP address 3	0–255	0	◎
P16.61	Industrial Ethernet communication card IP address 4	0–255	20	◎
P16.62	Industrial Ethernet communication card subnet mask 1	0–255	255	◎

Function code	Name	Description	Default value	Modify
P16.63	Industrial Ethernet communication card subnet mask 2	0–255	255	◎
P16.64	Industrial Ethernet communication card subnet mask 3	0–255	255	◎
P16.65	Industrial Ethernet communication card subnet mask 4	0–255	0	◎
P16.66	Industrial Ethernet communication card gateway 1	0–255	192	◎
P16.67	Industrial Ethernet communication card gateway 2	0–255	168	◎
P16.68	Industrial Ethernet communication card gateway 3	0–255	0	◎
P16.69	Industrial Ethernet communication card gateway 4	0–255	1	◎

P17 group—State-check functions

Function code	Name	Description	Default value	Modify
P17.00	Set frequency	Display current set frequency of the Inverter. Range: 0.00Hz–P00.03	0.00Hz	●
P17.01	Output frequency	Display current output frequency of the Inverter. Range: 0.00Hz–P00.03	0.00Hz	●
P17.02	Ramps reference frequency	Display current ramps reference frequency of the Inverter. Range: 0.00Hz–P00.03	0.00Hz	●
P17.03	Output voltage	Display current output voltage of the Inverter. Range: 0–1200V	0V	●
P17.04	Output current	Display the valid value of current output current of the Inverter. Range: 0.0–5000.0A	0.0A	●
P17.05	Motor speed	Display current motor speed. Range: 0–65535rpm	0 rpm	●

Function code	Name	Description	Default value	Modify
P17.06	Torque current	Display current torque current of the Inverter. Range: -3000.0–3000.0A	0.0A	●
P17.07	Exciting current	Display current exciting current of the Inverter. Range: -3000.0–3000.0A	0.0A	●
P17.08	Motor power	Display current motor power; 100% relative to rated motor power, positive value is motoring state, negative value is generating state. Range: -300.0–300.0% (relative to rated motor power)	0.0%	●
P17.09	Motor output torque	Display current output torque of the Inverter; 100% relative to rated motor torque, during forward running, positive value is motoring state, negative value is generating state, during reverse running, positive value is generating state, negative value is motoring state. Range: -250.0–250.0%	0.0%	●
P17.10	Estimated motor frequency	The estimated motor rotor frequency under open-loop vector condition. Range: 0.00–P00.03	0.00Hz	●
P17.11	DC bus voltage	Display current DC bus voltage of the Inverter. Range: 0.0–2000.0V	0.0V	●
P17.12	Digital input terminal state	Display current digital input terminal state of the Inverter. 0x00–0x3F Corresponds to HDIB, HDIA, S4, S3, S2 and S1 respectively	0x00	●
P17.13	Digital output terminal state	Display current digital output terminal state of the Inverter. 0x00–0x0F Corresponds to R02, RO1, HDO and Y1 respectively	0x00	●
P17.14	Digital adjustment variable	Display the regulating variable by UP/DOWN terminals of the Inverter. Range: 0.00Hz–P00.03	0.00Hz	●
P17.15	Torque reference value	Relative to percentage of the rated torque of current motor, display torque reference. Range: -300.0%–300.0% (rated motor current)	0.0%	●
P17.16	Linear speed	0–65535	0	●
P17.17	Reserved	/	/	/
P17.18	Count value	0–65535	0	●

Function code	Name	Description	Default value	Modify
P17.19	AI1 input voltage	Display input signal of AI 1 Range: 0.00–10.00V	0.00V	●
P17.20	AI2 input voltage	Display input signal of AI2 Range: -10.00V–10.00V	0.00V	●
P17.21	HDIA input frequency	Display input frequency of HDIA Range: 0.000–50.000kHz	0.000 kHz	●
P17.22	HDIB input frequency	Display input frequency of HDIB Range: 0.000–50.000kHz	0.000 kHz	●
P17.23	PID reference value	Display PID reference value Range: -100.0–100.0%	0.0%	●
P17.24	PID feedback value	Display PID feedback value Range: -100.0–100.0%	0.0%	●
P17.25	Motor power factor	Display the power factor of current motor. Range: -1.00–1.00	0.00	●
P17.26	Current running time	Display current running time of the Inverter. Range: 0–65535min	0min	●
P17.27	Actual stage of simple PLC	Displays the present stage of the simple PLC function. Range: 0–15	0	●
P17.28	Motor ASR controller output	Display the speed loop ASR controller output value under vector control mode, relative to the percentage of rated torque of the motor. Range: -300.0%–300.0% (rated motor current)	0.0%	●
P17.29	Pole angle of open-loop synchronous motor	Display initial identification angle of synchronous motor Range: 0.0–360.0	0.0	●
P17.30	Phase compensation of synchronous motor	Display phase compensation of synchronous motor Range: -180.0–180.0	0.0	●
P17.31	High-frequency superposition current of synchronous motor	0.0%–200.0% (rated motor current)	0.0	●
P17.32	Motor flux linkage	0.0%–200.0%	0.0%	●
P17.33	Exciting current reference	Display the exciting current reference value under vector control mode Range: -3000.0–3000.0A	0.0A	●
P17.34	Torque current reference	Display torque current reference value under vector control mode Range: -3000.0–3000.0A	0.0A	●

Function code	Name	Description	Default value	Modify
P17.35	AC incoming current	Display the valid value of incoming current on AC side Range: 0.0–5000.0A	0.0A	●
P17.36	Output torque	Display output torque value, during forward running, positive value is motoring state, negative value is generating state; during reverse running, positive value is generating state, negative value is motoring state. Range: -3000.0Nm–3000.0Nm	0.0Nm	●
P17.37	Motor overload count value	0–65535	0	●
P17.38	Process PID output	-100.0%–100.0%	0.0%	●
P17.39	Parameter download wrong function code	0.00–99.00	0.00	●
P17.40	Motor control mode	0x000–0x123 Ones: Control mode 0: Vector 0 1: Vector 1 2: VF control 3: Closed-loop vector control Tens: Control state 0: Speed control 1: Torque control 2: Position control Hundreds: Motor number 0: Motor 1 1: Motor 2	0x000	●
P17.41	Upper limit of the torque when motoring	0.0%–300.0% (rated motor current)	0.0%	●
P17.42	Upper limit of brake torque	0.0%–300.0% (rated motor current)	0.0%	●
P17.43	Upper limit frequency of forward running of torque control	0.00Hz–P00.03	0.00Hz	●
P17.44	Upper limit frequency of reverse running of torque control	0.00Hz–P00.03	0.00Hz	●
P17.45	Inertia compensation torque	-100.0%–100.0%	0.0%	●

Function code	Name	Description	Default value	Modify
P17.46	Friction compensation torque	-100.0%–100.0%	0.0%	●
P17.47	Motor pole pairs	0–65535	0	●
P17.48	Inverter overload count value	0–65535	0	●
P17.49	Frequency set by A source	0.00Hz–P00.03	0.00Hz	●
P17.50	Frequency set by B source	0.00Hz–P00.03	0.00Hz	●
P17.51	PID proportional output	-100.0%–100.0%	0.0%	●
P17.52	PID integral output	-100.0%–100.0%	0.0%	●
P17.53	PID differential output	-100.0%–100.0%	0.0%	●
P17.54	Actual PID proportional gain	0.00–100	0.00	●
P17.55	Actual PID integral time	0.00–10.00s	0.00s	●
P17.56	Actual PID differential time	0.00–10.00s	0.00s	●
P17.57	Current step of multi-step speed	0–15	0	●
P17.58	Peak-to-peak value at 100Hz frequency component (square-wave orthogonal function detected)	0.0–300.0V Peak-to-peak value of bus voltage fluctuation at 100Hz frequency component, which is detected by using a square-wave orthogonal function	0.0V	●
P17.59	Peak-to-peak value at 100Hz frequency component (sine-wave orthogonal function detected)	0.0–300.0V Peak-to-peak value of bus voltage fluctuation at 100Hz frequency component, which is detected by using a sine-wave orthogonal function	0.0V	●

P18 group—Closed-loop control state check

Function code	Name	Description	Default value	Modify
P18.00	Actual frequency of encoder	The actual-measured encoder frequency; the value of forward running is positive; the value of reverse running is negative. Range: -999.9–3276.7Hz	0.0Hz	●

Function code	Name	Description	Default value	Modify
P18.01	Encoder position count value	Encoder count value, quadruple frequency, Range: 0–65535	0	●
P18.02	Encoder Z pulse count value	Corresponding count value of encoder Z pulse. Range: 0–65535	0	●
P18.03	High bit of position reference value	High bit of position reference value, zero out after stop. Range: 0–30000	0	●
P18.04	Low bit of position reference value	Low bit of position reference value, zero out after stop. Range: 0–65535	0	●
P18.05	High bit of position feedback value	High bit of position feedback value, zero out after stop. Range: 0–30000	0	●
P18.06	Low bit of position feedback value	Low bit of position feedback value, zero out after stop. Range: 0–65535	0	●
P18.07	Position deviation	Deviation between current reference position and actual running position. Range: -32768–32767	0	●
P18.08	Position of position reference point	Position of reference point of Z pulse when the spindle stops accurately. Range: 0–65535	0	●
P18.09	Current position setup of spindle	Current position setup when the spindle stops accurately. Range: 0–359.99	0.00	●
P18.10	Current position when spindle stops accurately	Current position when spindle stops accurately. Range: 0–65535	0	●
P18.11	Encoder Z pulse direction	Z pulse direction display. When the spindle stops accurately, there may be a couple of pulses' error between the position of forward and reverse orientation, which can be eliminated by adjusting Z pulse direction of P20.02 or exchanging phase AB of encoder. 0: Forward 1: Reverse	0	●
P18.12	Encoder Z pulse angle	Reserved. Range: 0.00–359.99	0.00	●
P18.13	Encoder Z pulse error times	Reserved. Range: 0–65535	0	●
P18.14	High bit of encoder pulse count value	0–65535	0	●

Function code	Name	Description	Default value	Modify
P18.15	Low bit of encoder pulse count value	0–65535	0	●
P18.16	Main control board measured speed value	-3276.8–3276.7Hz	0.0Hz	●
P18.17	Pulse command frequency	Pulse command (A2, B2 terminal) is converted to the set frequency, and it is valid under pulse position mode and pulse speed mode. Range: 0–655.35Hz	0.00Hz	●
P18.18	Pulse command feedforward	Pulse command (A2, B2 terminal) is converted to the set frequency, and it is valid under pulse position mode and pulse speed mode. Range: 0–655.35Hz	0.00Hz	●
P18.19	Position regulator output	-327.68–327.67Hz	0.00Hz	●
P18.20	Count value of resolver	Count value of resolver. Range: 0–65535	0	●
P18.21	Resolver angle	The pole position angle read according to the resolver-type encoder. Range: 0.00–359.99	0.00	●
P18.22	Pole angle of closed-loop synchronous motor	Current pole position. Range: 0.00–359.99	0.00	●
P18.23	State control word 2	0x0000–0xFFFF	0x0000	●
P18.24	High bit of count value of pulse reference	0–65535	0	●
P18.25	Low bit of count value of pulse reference	0–65535	0	●
P18.26	PG card measured speed value	-3276.8–3276.7Hz	0.0Hz	●
P18.27	Encoder UVW sector	0–7	0	●
P18.28	Encoder PPR (pulse-per-revolution) display	0–65535	0	●

Function code	Name	Description	Default value	Modify
P18.29	Angle compensation value of synchronous motor	-180.0–180.0	0.00	●
P18.30	Z pulse angle of SM	0.00–655.35	0.00	●
P18.31	Pulse reference Z pulse value	0–65535	0	●
P18.32	Pulse-given main control board measured speed value	-3276.8–3276.7Hz	0.0Hz	●
P18.33	Pulse-given PG card measured speed value	-3276.8–3276.7Hz	0.0Hz	●
P18.34	Present encoder filter width	0–63	0	●
P18.35	8k test duration	0–65535	0	●

P19 group—Expansion card state check

Function code	Name	Description	Default value	Modify
P19.00	Type of card at slot 1	0–65535 0: No card 1: Programmable card 2: I/O card 3: Incremental PG card 4: Incremental PG card with UVW 5: Ethernet communication card 6: DP communication card 7: Bluetooth card 1 8: Resolver PG card 9: CANopen communication card 10: WIFI card 11: PROFINET communication card 12: Sine/Cosine PG card without CD signal 13: Sine/Cosine PG card with CD signal 14: Absolute encoder PG card 15: CAN master/slave communication card 16: Modbus/Modbus TCP communication	0	●
P19.01	Type of card at slot 2		0	●
P19.02	Type of card at slot 3		0	●

Function code	Name	Description	Default value	Modify
		card 17: EtherCAT communication card 18: BACnet communication card 19: DeviceNet communication card 20: PT100/PT1000 temperature detection card 21: EtherNet IP communication card 22: MECHATROLINK communication card 23: Bluetooth card 2 24–65535: Reserved		
P19.03	Software version of the expansion card in card slot 1	0.00–655.35	0.00	●
P19.04	Software version of the expansion card in card slot 2	0.00–655.35	0.00	●
P19.05	Software version of the expansion card in card slot 3	0.00–655.35	0.00	●
P19.06	Input state of extension I/O card terminals	0x0000–0xFFFF	0x0000	●
P19.07	Output state of extension I/O card terminals	0x0000–0xFFFF	0x0000	●
P19.08	Reserved	/	/	/
P19.09	AI3 input voltage of extension I/O card	0.00–10.00V	0.00V	●
P19.10	EC PT100 detected temperature	-50.0–150.0°C	0.0°C	●
P19.11	EC PT100 detected digital	0–4096	0	●
P19.12	EC PT1000 detected temperature	-50.0–150.0°C	0.0°C	●
P19.13	EC PT1000 detected digital	0–4096	0	●

Function code	Name	Description	Default value	Modify
P19.14	Alarm display	0–4 0: No alarm 1: PT100 detected OH alarm (A-Ot1) 2: PT1000 detected OH alarm (A-Ot2) 3: PT100 disconnection alarm (A-Pt1) 4: PT1000 disconnection alarm (A-Pt2)	0	●
P19.15	Communication card control word	0x0000–0xFFFF	0x0000	●
P19.16	Communication card status word	0x0000–0xFFFF	0x0000	●
P19.17	Ethernet monitoring variable 1	0–65535	0	●
P19.18	Ethernet monitoring variable 2	0–65535	0	●
P19.19	Ethernet monitoring variable 3	0–65535	0	●
P19.20	Ethernet monitoring variable 4	0–65535	0	●
P19.21	AI/AO detected temperature	-20.0–200.0°C	0.0°C	●

P20 group—Encoder of motor 1

Function code	Name	Description	Default value	Modify
P20.00	Encoder type display	0: Incremental encoder 1: Resolver-type encoder 2: Sin/Cos encoder 3: Endat absolute encoder	0	●
P20.01	Encoder pulse number	Number of pulses generated when the encoder revolves for one circle. Setting range: 0–60000	1024	◎
P20.02	Encoder direction	0x000–0x111 Ones: AB direction 0: Forward 1: Reverse Tens: Z pulse direction (reserved) 0: Forward 1: Reverse	0x000	◎

Function code	Name	Description	Default value	Modify
		Hundreds: CD/UVW pole signal direction 0: Forward 1: Reverse		
P20.03	Detection time of encoder offline fault	0.0–10.0s	2.0s	○
P20.04	Detection time of encoder reversal fault	0.0–100.0s	0.8s	○
P20.05	Filter times of encoder detection	Setting range: 0x00–0x99 Ones: Low-speed filter time, corresponds to 2^(0–9)×125μs. Tens: High-speed filter times, corresponds to 2^(0–9)×125μs.	0x33	○
P20.06	Speed ratio between encoder mounting shaft and motor	Users need to set this parameter when the encoder is not installed on the motor shaft and the drive ratio is not 1. Setting range: 0.001–65.535	1.000	○
P20.07	Control parameters of synchronous motor	0x0000–0xFFFF Bit0: Enable Z pulse calibration Bit1: Enable encoder angle calibration Bit2: Enable SVC speed measurement Bit3: Reserved Bit4: Reserved Bit5: Reserved Bit6: Enable CD signal calibration Bit7: Reserved Bit8: Do not detect encoder fault during autotuning Bit9: Enable Z pulse detection optimization Bit10: Enable initial Z pulse calibration optimization Bit11: Reserved Bit12: Clear Z pulse arrival signal after stop Bit13: Reserved Bit14: Detect Z pulse after one rotation Bit15: Reserved	0x0003	○
P20.08	Enable Z pulse offline detection	0x00–0x11 Ones: Z pulse 0: Do not detect 1: Enable Tens: UVW pulse (for synchronous motor) 0: Do not detect 1: Enable	0x10	○

Function code	Name	Description	Default value	Modify
P20.09	Initial angle of Z pulse	Relative electric angle of encoder Z pulse and motor pole position. Setting range: 0.00–359.99	0.00	○
P20.10	Initial angle of the pole	Relative electric angle of encoder position and motor pole position. Setting range: 0.00–359.99	0.00	○
P20.11	Autotuning of initial angle of pole	0–3 0: No operation 1: Rotary autotuning (DC braking) 2: Static autotuning (suitable for resolver-type encoder, sin/cos with CD signal feedback) 3: Rotary autotuning (initial angle identification)	0	◎
P20.12	Speed measurement optimization selection	0–2 0: No optimization 1: Optimization mode 1 2: Optimization mode 2	1	◎
P20.13	CD signal zero offset gain	0–65535	0	○
P20.14	Encoder type selection	0x00–0x11 Ones: Incremental encoder 0: without UVW 1: with UVW Tens: Sin/Cos encoder 0: without CD signal 1: with CD signal	0x00	◎
P20.15	Speed measurement mode	0: PG card 1: local; realized by HDIA and HDIB; supports incremental 24V encoder only	0	◎
P20.16	Frequency-division coefficient	0–255	0	○
P20.17	Pulse filer processing	0x0000–0xFFFF Bit0: Enable/disable encoder input filter 0: No filter 1: Filter Bit1: Encoder signal filter mode (set Bit0 or Bit2 to 1) 0: Self-adaptive filter 1: Use P20.18 filter parameters Bit2: Enable/disable encoder frequency-division output filter 0: No filter 1: Filter Bit3: Enable/disable filter for	0x0033	○

Function code	Name	Description	Default value	Modify
		frequency-division output of pulse reference 0: No filter 1: Filter Bit4: Enable/disable pulse reference filter 0: No filter 1: Filter Bit5: Pulse reference filter mode (valid when Bit4 is set to 1) 0: Self-adaptive filter 1: Use P20.19 filter parameters Bit6: Frequency-divided output source setting (valid only for incremental encoders) 0: Encoder signals 1: Pulse reference signals Bits7–15: Reserved		
P20.18	Encoder pulse filter width	0–63 0 means 0.25μs	2	○
P20.19	Pulse reference filter width	0–63 0 means 0.25μs	2	○
P20.20	Pulse number of pulse reference	0–16000	1024	◎
P20.21	Enable angle compensation of synchronous motor	0–1	1	○
P20.22	Switch-over frequency threshold of speed measurement mode	0–590.00Hz	1.00Hz	○
P20.23	Synchronous motor angle compensation coefficient	-200.0–200.0%	100.0%	○
P20.24	Number of pole pairs in initial magnetic pole angle autotuning	1–128	2	◎

P21 group—Position control

Function code	Name	Description	Default value	Modify
P21.00	Positioning mode	0x0000–0x7121 Ones: Control mode selection (only for FVC) 0: Speed control 1: Position control Tens: Position command source 0: Pulse train, using PG card terminal (A2, B2) pulse giving signal for position control 1: Digital position, using the setting of P21.17 for position control, while the positioning mode can be set through P21.16 2: Positioning of photoelectric switch during stop. When a terminal receives a photoelectric switch signal (selection terminal function 43), the Inverter starts positioning for stop, and the stop distance can be set through P21.17. Hundreds: Reserved Thousands: servo mode (Reserved) 0: Servo disabled, without position deviation 1: Servo disabled, with position deviation 2: Servo enabled, without position deviation 3: Servo enabled, with position deviation **Note:** In pulse train positioning mode or spindle positioning mode, when the servo enabling signal is valid, the Inverter enters the servo running mode; when there is no servo enabling signal, the Inverter can use the servo running mode only after receiving the FWD or REV running mode.	0x0000	○
P21.01	Pulse command mode	0x0000–0x3133 Ones: Pulse mode 0: A/B quadrature pulse; A precedes B 1: A: PULSE; B: SIGN If channel B is of low electric level, the edge counts up; if channel B is of high electric level, the edge counts down. 2: A: Positive pulse Channel A is positive pulse; channel B needs no wiring 3: A/B dual-channel pulse; channel A pulse edge counts up, channel B pulse edge counts down Tens: Pulse direction Bit0: Set pulse direction 0: Forward	0x0000	◎

Function code	Name	Description	Default value	Modify
		1: Reverse Bit1: Set pulse direction by running direction 0: Disable, and BIT0 is valid; 1: Enable Hundreds: Reserved Thousands: Pulse control selection Bit0: Pulse filter selection 0: Inertia filter 1: Average moving filter Bit1: Overspeed control 0: No control 1: Control		
P21.02	Position loop gain 1	The two automatic position regulator (APR) gains are switched based on the switching mode set in P21.04. When the spindle orientation function is used, the gains are switched automatically, regardless of the setting of P21.04. P21.03 is used for dynamic running, and P21.02 is used for maintaining the locked state. Setting range: 0.0–400.0	20.0	○
P21.03	Position loop gain 2		30.0	○
P21.04	Switch-over mode of position loop gain	This parameter is used to set the APR gain switching mode. To use torque command-based switching, you need to set P21.05; and to use speed command-based switching, you need to set P21.06. 0: No switch-over 1: Torque command 2: Speed command 3–5: Reserved	0	○
P21.05	Torque command level during position gain switch-over	0.0–100.0% (of the rated motor torque)	10.0%	○
P21.06	Speed command level during position gain switch-over	0.0–100.0% (of the rated motor speed)	10.0%	○
P21.07	Smooth filter coefficient during gain switch-over	The smooth filter coefficient during position gain switch-over. Setting range: 0–15	5	○
P21.08	Output limit of position controller	The output limit of position regulator, if the limit value is 0, position regulator will be invalid, and no position control can be performed,	20.0%	○

Function code	Name	Description	Default value	Modify
		however, speed control is available. Setting range: 0.0–100.0% (max. output frequency P00.03)		
P21.09	Completion range of positioning	When the position deviation is less than P21.09, and the duration is larger than P21.10, positioning completion signal will be outputted. Setting range: 0–1000	10	○
P21.10	Detection time for positioning completion	0.0–1000.0ms	10.0ms	○
P21.11	Numerator of position command ratio	Electronic gear ratio, used to adjust the corresponding relation between position command and actual running displacement. Setting range: 1–65535	1000	○
P21.12	Denominator of position command ratio	Setting range: 1–65535	1000	○
P21.13	Position feedforward gain	0.00–120.00% For pulse train reference only (position control)	100.00	○
P21.14	Position feedforward filter time constant	0.0–3200.0ms For pulse train reference only (position control)	3.0ms	○
P21.15	Position command filter time constant	The position feedforward filter time constant during pulse train positioning. 0.0–3200.0ms	0.0ms	◎
P21.16	Digital positioning mode	0x0000–0xFFFF Bit0: Positioning mode selection 0: Relative position 1: Absolute position (home) (reserved) Bit1: Positioning cycle selection 0: Cyclic positioning by terminals 1: Automatic cyclic positioning Bit2: Cycle mode 0: Continuous 1: Repetitive (supported by automatic cyclic positioning only) Bit3: P21.17 digital setting mode 0: Incremental 1: Position type (do not support continuous mode) Bit4: Home searching mode 0: Search for the home just once 1: Search for the home during each run	0x0000	○

Function code	Name	Description	Default value	Modify
		Bit5: Home calibration mode 0: Calibrate in real time 1: Single calibration Bit6: Positioning completion signal selection 0: Valid during the time set by P21.25 (Hold time of positioning completion signal) 1: Always valid Bit7: Initial positioning selection (for cyclic positioning by terminals) 0: Invalid (do not rotate) 1: Valid Bit8: Positioning enable signal selection (for cyclic positioning by terminals only; positioning function is always enabled for automatic cyclic positioning) 0: Pulse signal 1: Level signal Bit9: Position source 0: P21.17 setting 1: PROFIBUS/CANopen setting Bit10: Whether to save the encoder pulse counting value at power failure 0: Do not save 1: Save Bit 11: Reserved Bit12: Positioning curve selection (reserved) 0: Straight line 1: S curve		
P21.17	Position digital reference	Set digital positioning position; Actual position=P21.17×P21.11/P21.12 0–65535	0	○
P21.18	Positioning speed setup selection	0: Set by P21.19 1: Set by AI1 2: Set by AI2 3: Set by AI3 4: Set by high speed pulse HDIA 5: Set by high speed pulse HDIB	0	○
P21.19	Positioning speed digits	0–100.0% max. frequency	20.0%	○
P21.20	Acceleration time of positioning	Set the acceleration/deceleration time of positioning process. Acceleration time of positioning means the time needed for the Inverter to accelerate from 0Hz to the max. output frequency (P00.03). Deceleration time of positioning means the time needed for the Inverter to decelerate from the max. output frequency (P00.03) to 0hz.	3.00s	○
P21.21	Deceleration time of positioning		3.00s	○

Function code	Name	Description	Default value	Modify
		Setting range of P21.20: 0.01–300.00s Setting range of P21.21: 0.01–300.00s		
P21.22	Hold time of positioning arrival	Set the hold time of waiting when target positioning position is reached. Setting range: 0.000–60.000s	0.100s	○
P21.23	Home search speed	0.00–50.00Hz	2.00Hz	○
P21.24	Home position offset	0–65535	0	○
P21.25	Hold time of positioning completion signal	The hold time of positioning completion signal, this parameter is also valid for positioning completion signal of spindle orientation. Setting range: 0.000–60.000s	0.200s	○
P21.26	Pulse superposition value	Setting range of P21.26: -9999–32767 Setting range of P21.27: 0–3000.0 pulse/ms This function is enabled in the pulse speed reference (P00.06=12) or pulse position mode (P21.00=1): 1. Input terminal function #68 (enable pulse superposition) When the rising edge of the terminal is detected, the pulse setting is increased to the value of P21.26, and the pulse reference channel is compensated by the pulse superposition rate set in P21.27. 2. Input terminal function #67 (progressive increase of pulses) When this terminal is enabled, the pulse reference channel is compensated by the pulse superposition rate set in P21.27. Note: Terminal filtering set in P05.09 may slightly affect the actual superposition. Example: P21.27 = 1.0 pulse/ms; P05.05 = 67 If the input signal of terminal S5 is 0.5s, the actual number of superposed pulses is 500. 3. Input terminal function #69 (progressive decrease of pulses) The sequence of this function is the same as those described above. The difference lies in that this terminal indicates that negative pulses are superposed. **Note:** All the pulses described here are superposed on the pulse reference channel (A2, B2). Pulse filtering, electronic gear, and other functions are valid for superposed pulses.	0	○
P21.27	Pulse superposition speed		8.0 pulse/ms	○
P21.28	Acceleration/deceleration time after disabling pulse		5.0s	○

Function code	Name	Description	Default value	Modify
		4. Output terminal function #28 (pulse superposing) When pulses are superposed, the output terminal operates. After pulses are superposed, the terminal does not operate.0–		
P21.29	Speed feedforward filter time constant (pulse train speed mode)	It is the filter time constant detected by pulse train when the speed reference source is set to pulse train (P00.06=12 or P00.07=12). Setting range: 0–3200.0ms	10.0ms	○
P21.30	Numerator of the 2nd command ratio	1–65535	1000	○
P21.31	Pulse reference speed measuring method	0–2 0: Main control board 1: PG card 2: Hybrid	0	○
P21.32	Pulse reference feedforward source	0x0–0x1	0x0	◎
P21.33	Set value of clearing encoder count	0–65535	0	◎

P22 group—Spindle positioning

Function code	Name	Description	Default value	Modify
P22.00	Spindle positioning mode selection	Setting range: 0x0000–0xFFFF Bit0: Enable spindle positioning 0: Disable 1: Enable Bit1: Select spindle positioning reference point 0: Z pulse input 1: S2/S3/S4 terminal input Bit2: Search for reference point 0: Search the reference point only once 1: Search the reference point every time Bit3: Enable reference point calibration 0: Disable 1: Enable Bit4: Positioning mode selection 1 0: Set direction positioning 1: Near-by direction positioning Bit5: Positioning mode selection 2	0x0000	○

Function code	Name	Description	Default value	Modify
		0: Forward positioning 1: Reverse positioning Bit6: Zeroing command selection 0: Electric level mode 1: Pulse mode Bit7: Reference point calibration mode 0: Calibrate at the first time 1: Calibrate in real time Bit8: Action selection after zeroing signal cancellation (electric level type) 0: Switch to speed mode 1: Position lock mode Bit9: Positioning completion signal selection 0: Electric level signal 1: Pulse signal Bit10: Z pulse signal source 0: Motor 1: Spindle Bit11–15: Reserved		
P22.01	Speed of spindle orientation	During spindle orientation, the speed of the position point of orientation will be searched, and then it will switch over to position control orientation. Setting range: 0.00–100.00Hz	10.00Hz	○
P22.02	Deceleration time of spindle orientation	Deceleration time of spindle orientation. Spindle orientation deceleration time means the time needed for the Inverter to decelerate from the max. output frequency (P00.03) to 0Hz. Setting range: 0.0–100.0s	3.0s	○
P22.03	Spindle zeroing position 0	Users can select the zeroing positions of four spindles by terminals (function code 46, 47). Setting range: 0–65535	0	○
P22.04	Spindle zeroing position 1	Setting range: 0–65535	0	○
P22.05	Spindle zeroing position 2	Setting range: 0–65535	0	○
P22.06	Spindle zeroing position 3	Setting range: 0–65535	0	○
P22.07	Spindle scale-division angle 1	Users can select seven spindle scale-division values by terminals (function code 48, 49 and 50). Setting range: 0.00–359.99	15.00	○
P22.08	Spindle scale-division angle 2	Setting range: 0.00–359.99	30.00	○

Function code	Name	Description	Default value	Modify
P22.09	Spindle scale-division angle 3	Setting range: 0.00–359.99	45.00	○
P22.10	Spindle scale-division angle 4	Setting range: 0.00–359.99	60.00	○
P22.11	Spindle scale-division angle 5	Setting range: 0.00–359.99	90.00	○
P22.12	Spindle scale-division angle 6	Setting range: 0.00–359.99	120.00	○
P22.13	Spindle scale-division angle 7	Setting range: 0.00–359.99	180.00	○
P22.14	Spindle drive ratio	This parameter specifies the reduction ratio of the spindle and the mounting shaft of the encoder. Setting range: 0.000–30.000	1.000	○
P22.15	Zero-point communication setup of spindle	P22.15 sets spindle zero-point offset, if the selected spindle zero point is P22.03, the final spindle zero point will be the sum of P22.03 and P22.15. Setting range: 0–39999	0	○
P22.16	Reserved	/	/	/
P22.17	Reserved	/	/	/
P22.18	Rigid tapping selection	Setting range: 0x00–0x31 Ones: Enable/disable 0: Disable 1: Enable Tens: Analog input port selection 0: Invalid 1: AI1 2: AI2 3: AI3	0x00	◎
P22.19	Analog filter time of rigid tapping	0.0ms–1000.0ms	1.0ms	○
P22.20	Max. frequency of rigid tapping	0.00–590.00Hz	50.00Hz	○
P22.21	Corresponding frequency of analog zero drift of rigid tapping	0.00–10.00Hz	0.00Hz	○
P22.22–P22.24	Reserved	/	/	/

P23 group—Vector control of motor 2

Function code	Name	Description	Default value	Modify
P23.00	Speed loop proportional gain 1	P23.00–P23.05 fit for vector control mode only. Below switch-over frequency 1 (P23.02), the speed loop PI parameters are P23.00 and P23.01. Above switch-over frequency 2 (P23.05), the speed loop PI parameters are P23.03 and P23.04; in between them, the PI parameters are obtained by linear variation between two groups of parameters, as shown in the figure below. 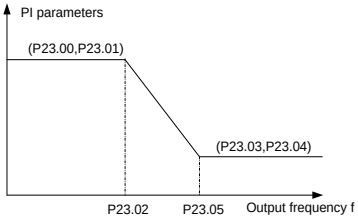 The speed loop dynamic response characteristics of vector control can be adjusted by setting the proportional coefficient and integral time of speed regulator. Increase proportional gain or decrease integral time can accelerate dynamic response of speed loop, however, if the proportional gain is too large or integral time is too small, system oscillation and large overshoot may occur; if proportional gain is too small, stable oscillation or speed offset may occur. Speed loop PI parameter is closely related to the system inertia, users should make adjustment according to different load characteristics based on the default PI parameter to fulfill different needs. Setting range of P23.00: 0.0–200.0 Setting range of P23.01: 0.000–10.000s Setting range of P23.02: 0.00Hz–P23.05 Setting range of P23.03: 0.0–200.0 Setting range of P23.04: 0.000–10.000s Setting range of P23.05: P23.02–P00.03 (max. output frequency)	20.0	○
P23.01	Speed loop integral time 1		0.200s	○
P23.02	Switch over low point frequency		5.00Hz	○
P23.03	Speed loop proportional gain 2		20.0	○
P23.04	Speed loop integral time 2		0.200s	○
P23.05	Switch over high point frequency		10.00Hz	○
P23.06	Speed loop output filter	0–8 (corresponds to 0–2^8/10ms)	0	○
P23.07	Slip compensation	Slip compensation coefficient is used to adjust the slip frequency of vector control to improve	100%	○

Function code	Name	Description	Default value	Modify
	coefficient of vector control (motoring)	system speed control precision. Users can effectively control the static error of speed by adjusting this parameter properly. Setting range: 50–200%		
P23.08	Slip compensation coefficient of vector control (generating)		100%	○
P23.09	Current loop proportional coefficient P	**Note:** 1. These two parameters are used to adjust PI parameters of current loop; it affects dynamic response speed and control precision of the system directly. The default value needs no adjustment under common conditions; 2. Fit for SVC mode 0 (P00.00=0) , SVC mode 1 (P00.00=1) and FVC mode (P00.00=3); Setting range: 0–65535	1000	○
P23.10	Current loop integral coefficient I		1000	○
P23.11	Speed loop differential gain	0.00–10.00s	0.00s	○
P23.12	Proportional coefficient of high-frequency current loop	Under FVC mode (P00.00=3), below current loop high-frequency switch-over threshold (P23.14), current loop PI parameters are P23.09 and P23.10; above current loop high-frequency switch-over threshold, current loop PI parameters are P23.12 and P23.13. Setting range of P23.12: 0–65535 Setting range of P23.13: 0–65535 Setting range of P23.14: 0.0–100.0% (relative to max. frequency)	1000	○
P23.13	Integral coefficient of high-frequency current loop		1000	○
P23.14	High-frequency switch-over threshold of current loop		100.0%	○
P23.15–P23.19	Reserved	/	/	/

P24 group—Encoder of motor 2

Function code	Name	Description	Default value	Modify
P24.00	Encoder type display	0: Incremental encoder 1: Resolver-type encoder 2: Sin/Cos encoder 3: Endat absolute encoder	0	●
P24.01	Encoder pulse number	Number of pulses generated when the encoder revolves for one circle. Setting range: 0–60000	1024	◎
P24.02	Encoder	0x000–0x111	0x000	◎

Function code	Name	Description	Default value	Modify
	direction	Ones: AB direction 0: Forward 1: Reverse Tens: Z pulse direction (reserved) 0: Forward 1: Reverse Hundreds: CD/UVW pole signal direction 0: Forward 1: Reverse		
P24.03	Detection time of encoder offline fault	0.0–10.0s	2.0s	○
P24.04	Detection time of encoder reversal fault	0.0–100.0s	0.8s	○
P24.05	Filter times of encoder detection	Setting range: 0x00–0x99 Ones: Low-speed filter times, corresponds to 2^(0–9)×125μs. Tens: High-speed filter times; corresponds to 2^(0–9)×125μs.	0x33	○
P24.06	Speed ratio between encoder mounting shaft and motor	Users need to set this parameter when the encoder is not installed on the motor shaft and the drive ratio is not 1. Setting range: 0.001–65.535	1.000	○
P24.07	Control parameters of synchronous motor	Setting range: 0x0000–0xFFFF Bit0: Enable Z pulse calibration Bit1: Enable encoder angle calibration Bit2: Enable SVC speed measurement Bit3: Reserved Bit4: Reserved Bit5: Reserved Bit6: Enable CD signal calibration Bit7: Reserved Bit8: Do not detect encoder fault during autotuning Bit9: Enable Z pulse detection optimization Bit10: Enable initial Z pulse calibration optimization Bit11: Reserved Bit12: Clear Z pulse arrival signal after stop Bit13: Reserved Bit14: Detect Z pulse after one rotation Bit15: Reserved	0x0003	○
P24.08	Enable Z pulse	0x00–0x11	0x10	○

Function code	Name	Description	Default value	Modify
	offline detection	Ones: Z pulse 0: Do not detect 1: Enable Tens: UVW pulse 0: Do not detect 1: Enable		
P24.09	Initial angle of Z pulse	Relative electric angle of encoder Z pulse and motor pole position. Setting range: 0.00–359.99	0.00	○
P24.10	Initial angle of the pole	Relative electric angle of encoder position and motor pole position. Setting range: 0.00–359.99	0.00	○
P24.11	Autotuning of initial angle of pole	0–3 0: No operation 1: Rotary autotuning (DC braking) 2: Static autotuning (suitable for resolver-type encoder, sin/cos with CD signal feedback) 3: Rotary autotuning (initial angle identification)	0	◎
P24.12	Speed measurement optimization selection	0: No optimization 1: Optimization mode 1 2: Optimization mode 2	1	◎
P24.13	CD signal zero offset gain	0–65535	0	○
P24.14	Encoder type selection	0x00–0x11 Ones: Incremental encoder 0: without UVW 1: with UVW Tens: Sin/Cos encoder 0: without CD signal 1: with CD signal	0x00	◎
P24.15	Speed measurement mode	0: PG card 1: local; realized by HDIA and HDIB; supports incremental 24V encoder only	0	◎
P24.16	Frequency-division coefficient	0–255	0	○
P24.17	Pulse filer processing	0x0000–0xFFFF Bit0: Enable/disable encoder input filter 0: No filter 1: Filter Bit1: Encoder signal filter mode (set Bit0 or Bit2 to 1) 0: Self-adaptive filter	0x0033	○

Function code	Name	Description	Default value	Modify
		1: Use P24.18 filter parameters Bit2: Enable/disable encoder frequency-division output filter 0: No filter 1: Filter Bit3: Enable/disable pulse reference frequency-division output filter 0: No filter 1: Filter Bit4: Enable/disable pulse reference filter 0: No filter 1: Filter Bit5: Pulse reference filter mode (valid when Bit4 is set to 1) 0: Self-adaptive filter 1: Use P24.19 filter parameters Bit6: Frequency- division output source setting (valid only for incremental encoders) 0: Encoder signals 1: Pulse reference signals Bits 7–15: Reserved		
P24.18	Encoder pulse filter width	0–63 The filtering time is P24.18×0.25 μs. The value 0 or 1 indicates 0.25 μs.	2	○
P24.19	Pulse reference filter width	0–63 The filtering time is P24.19×0.25 μs. The value 0 or 1 indicates 0.25 μs.	2	○
P24.20	Pulse number of pulse reference	0–16000	1024	◎
P24.21	Enable angle compensation of synchronous motor	0–1	1	○
P24.22	Switch-over frequency threshold of speed measurement mode	0–590.00Hz	1.00Hz	○
P24.23	Synchronous motor angle compensation coefficient	-200.0–200.0%	100.0%	○
P24.24	Number of pole pairs in inital	1–128	2	◎

Function code	Name	Description	Default value	Modify
	magnetic pole angle autotuning			

P25 group—Extension I/O card input functions

Function code	Name	Description	Default value	Modify
P25.00	HDI3 input type selection	0: HDI3 is high-speed pulse input 1: HDI3 is digital input	0	◎
P25.01	S5 terminal function	The same with P05 group	0	◎
P25.02	S6 terminal function		0	◎
P25.03	S7 terminal function		0	◎
P25.04	S8 terminal function		0	◎
P25.05	S9 terminal function		0	◎
P25.06	S10 terminal function		0	◎
P25.07	HDI3 terminal function		0	◎
P25.08	Input terminal polarity of expansion card	0x00–0x7F	0x00	○
P25.09	Virtual terminal setup of expansion card	0x00–0x7F (0: disable, 1: enable) BIT0: S5 virtual terminal BIT1: S6 virtual terminal BIT2: S7 virtual terminal BIT3: S8 virtual terminal BIT4: S9 virtual terminal BIT5: S10 virtual terminal BIT6: HDI3 virtual terminal	0x00	◎
P25.10	HDI3 terminal switch-on delay	These function codes define corresponding delay of the programmable input terminals during level variation from switch-on to switch-off. 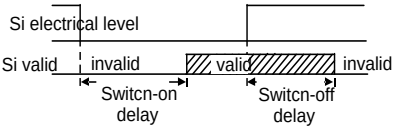 Setting range: 0.000–50.000s	0.000s	○
P25.11	HDI3 terminal switch-off delay		0.000s	○
P25.12	S5 terminal switch-on delay		0.000s	○
P25.13	S5 switch-off delay		0.000s	○
P25.14	S6 terminal switch-on delay		0.000s	○

Function code	Name	Description	Default value	Modify
P25.15	S6 switch-off delay		0.000s	○
P25.16	S7 terminal switch-on delay		0.000s	○
P25.17	S7 switch-off delay		0.000s	○
P25.18	S8 terminal switch-on delay		0.000s	○
P25.19	S8 switch-off delay		0.000s	○
P25.20	S9 terminal switch-on delay		0.000s	○
P25.21	S9 switch-off delay		0.000s	○
P25.22	S10 terminal switch-on delay		0.000s	○
P25.23	S10 switch-off delay		0.000s	○
P25.24	Lower limit value of AI3	These function codes define the relation between analog input voltage and corresponding set value of analog input. When the analog input voltage exceeds the range of max./min. input, the max. input or min. input will be adopted during calculation. When analog input is current input, 0–20mA current corresponds to 0–10V voltage. In different application cases, 100% of the analog setting corresponds to different nominal values. The figure below illustrates several settings. 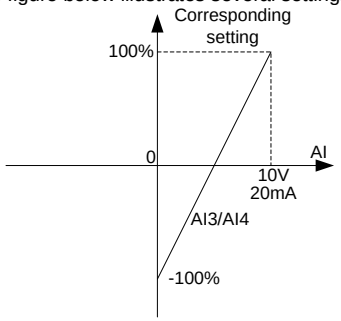 Input filter time: Adjust the sensitivity of analog input, increase this value properly can enhance the anti-interference capacity of analog variables; however, it will also degrade	0.00V	○
P25.25	Corresponding setting of lower limit of AI3		0.0%	○
P25.26	Upper limit value of AI3		10.00V	○
P25.27	Corresponding setting of upper limit of AI3		100.0%	○
P25.28	Input filter time of AI3		0.030s	○
P25.29	Lower limit value of AI4		0.00V	○
P25.30	Corresponding setting of lower limit of AI4		0.0%	○
P25.31	Upper limit value of AI4		10.00V	○
P25.32	Corresponding setting of upper limit of AI4		100.0%	○
P25.33	Input filter time of AI4		0.030s	○

Function code	Name	Description	Default value	Modify
		the sensitivity of analog input. **Note:** AI3 and AI4 can support 0–10V/0–20mA input, when AI3 and AI4 select 0–20mA input, the corresponding voltage of 20mA is 10V; Setting range of P25.24: 0.00V–P25.26 Setting range of P25.25: -300.0%–300.0% Setting range of P25.26: P25.24–10.00V Setting range of P25.27: -300.0%–300.0% Setting range of P25.28: 0.000s–10.000s Setting range of P25.29: 0.00V–P25.31 Setting range of P25.30: -300.0%–300.0% Setting range of P25.31: P25.29–10.00V Setting range of P25.32: -300.0%–300.0% Setting range of P25.33: 0.000s–10.000s		
P25.34	HDI3 high-speed pulse input function	0: Set input via frequency 1: Count	0	◎
P25.35	Lower limit frequency of HDI3	0.000 kHz–P25.37	0.000 kHz	○
P25.36	Corresponding setting of lower limit frequency of HDI3	-300.0%–300.0%	0.0%	○
P25.37	Upper limit frequency of HDI3	P25.35–50.000kHz	50.000 kHz	○
P25.38	Corresponding setting of upper limit frequency of HDI3	-300.0%–300.0%	100.0%	○
P25.39	HDI3 frequency input filter time	0.000s–10.000s	0.030s	○
P25.40	AI3 input signal type	Range: 0–1 0: Voltage type 1: Current type	0	○
P25.41	AI4 input signal type	Range: 0–1 0: Voltage type 1: Current type	0	○
P25.42–P25.45	Reserved	/	/	/

P26 group—Output functions of I/O expansion card

Function code	Name	Description	Default value	Modify
P26.00	HDO2 output type	0: Open collector high-speed pulse output 1: Open collector output	0	◎
P26.01	HDO2 output selection	The same with P06.01.	0	○
P26.02	Y2 output selection		0	○
P26.03	Y3 output selection		0	○
P26.04	Relay RO3 output selection		0	○
P26.05	Relay RO4 output selection		0	○
P26.06	Relay RO5 output selection		0	○
P26.07	Relay RO6 output selection		0	○
P26.08	Relay RO7 output selection		0	○
P26.09	Relay RO8 output selection		0	○
P26.10	Relay RO9 output selection		0	○
P26.11	Relay RO10 output selection		0	○
P26.12	Output terminal polarity of expansion card	Setting range: 0x0000–0x1FFF Bit0: Y2 Bit1: Y3 Bit2: HDO2 Bit3: RO3 Bit4: RO4 Bit5: RO5 Bit6: RO6 Bit7: RO7 Bit8: RO8 Bit9: RO9 Bit10: RO10 Bit11: RO11 Bit12: RO12	0x0000	○
P26.13	HDO2 switch-on delay	Used to define the corresponding delay of the level variation from switch-on to switch-off.	0.000s	○
P26.14	HDO2 switch-off delay		0.000s	○
P26.15	Y2 switch-on delay		0.000s	○

Function code	Name	Description	Default value	Modify
P26.16	Y2 switch-off delay	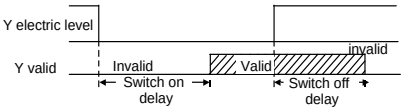 Setting range: 0.000–50.000s **Note:** P26.13 and P26.14 are valid only when P26.00 is set to 1.	0.000s	○
P26.17	Y3 switch-on delay		0.000s	○
P26.18	Y3 switch-off delay		0.000s	○
P26.19	Relay RO3 switch-on delay		0.000s	○
P26.20	Relay RO3 switch-off delay		0.000s	○
P26.21	Relay RO4 switch-on delay		0.000s	○
P26.22	Relay RO4 switch-off delay		0.000s	○
P26.23	Relay RO5 switch-on delay		0.000s	○
P26.24	Relay RO5 switch-off delay		0.000s	○
P26.25	Relay RO6 switch-on delay		0.000s	○
P26.26	Relay RO6 switch-off delay		0.000s	○
P26.27	Relay RO7 switch-on delay		0.000s	○
P26.28	Relay RO7 switch-off delay		0.000s	○
P26.29	Relay RO8 switch-on delay		0.000s	○
P26.30	Relay RO8 switch-off delay		0.000s	○
P26.31	Relay RO9 switch-on delay		0.000s	○
P26.32	Relay RO9 switch-off delay		0.000s	○
P26.33	Relay RO10 switch-on delay		0.000s	○
P26.34	Relay RO10 switch-off delay		0.000s	○
P26.35	AO2 output selection	The same with P06.14	0	○
P26.36	AO3 output selection		0	○
P26.38	Lower limit of AO2 output	Above function codes define the relation between output value and analog output. When the output value exceeds the set max./min. output range, the upper/low limit of output will be adopted during calculation. When analog output is current output, 1mA corresponds to 0.5V voltage. In different	0.0%	○
P26.39	Corresponding AO2 output of lower limit		0.00V	○
P26.40	Upper limit of AO2 output		100.0%	○

Function code	Name	Description	Default value	Modify
P26.41	Corresponding AO2 output of upper limit	applications, 100% of output value corresponds to different analog outputs. 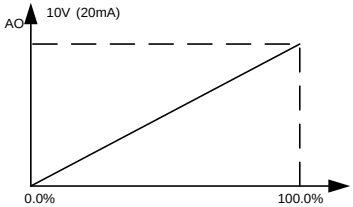 Setting range of P26.38: -300.0%–P26.40 Setting range of P26.39: 0.00V–10.00V Setting range of P26.40: P26.38–100.0% Setting range of P26.41: 0.00V–10.00V Setting range of P26.42: 0.000s–10.000s Setting range of P26.43: -300.0%–P26.45 Setting range of P26.44: 0.00V–10.00V Setting range of P26.45: P26.43–300.0% Setting range of P26.46: 0.00V–10.00V Setting range of P26.47: 0.000s–10.000s	10.00V	○
P26.42	AO2 output filter time		0.000s	○
P26.43	Lower limit of AO3 output		0.0%	○
P26.44	Corresponding AO3 output of lower limit		0.00V	○
P26.45	Upper limit of AO3 output		100.0%	○
P26.46	Corresponding AO3 output of upper limit		10.00V	○
P26.47	AO3 output filter time		0.000s	○
P26.48–P26.52	Reserved	/	/	/

P27 group—Programmable expansion card functions

Function code	Name	Description	Default value	Modify
P27.00	Enabling programmable card	0–1 This function is reserved.	0	◎
P27.01	I_WrP1	0–65535 Used to write a value to WrP1 of the programmable card.	0	○
P27.02	I_WrP2	0–65535 Used to write a value to WrP2 of the programmable card.	0	○
P27.03	I_WrP3	0–65535 Used to write a value to WrP3 of the programmable card.	0	○
P27.04	I_WrP4	0–65535 Used to write a value to WrP4 of the programmable card.	0	○
P27.05	I_WrP5	0–65535 Used to write a value to WrP5 of the programmable card.	0	○
P27.06	I_WrP6	0–65535 Used to write a value to WrP6 of the programmable card.	0	○

Function code	Name	Description	Default value	Modify
P27.07	I_WrP7	0–65535 Used to write a value to WrP7 of the programmable card.	0	○
P27.08	I_WrP8	0–65535 Used to write a value to WrP8 of the programmable card.	0	○
P27.09	I_WrP9	0–65535 Used to write a value to WrP9 of the programmable card.	0	○
P27.10	I_WrP10	0–65535 Used to write a value to WrP10 of the programmable card.	0	○
P27.11	Programmable card status	0–1 Used to display the status of the programmable card. 0: Stopped 1: Running	0	●
P27.12	C_MoP1	0–65535 Used to monitor/view the MoP1 value of the programmable card.	0	●
P27.13	C_MoP2	0–65535 Used to monitor/view the MoP2 value of the programmable card.	0	●
P27.14	C_MoP3	0–65535 Used to monitor/view the MoP3 value of the programmable card.	0	●
P27.15	C_MoP4	0–65535 Used to monitor/view the MoP4 value of the programmable card.	0	●
P27.16	C_MoP5	0–65535 Used to monitor/view the MoP5 value of the programmable card.	0	●
P27.17	C_MoP6	0–65535 Used to monitor/view the MoP6 value of the programmable card.	0	●
P27.18	C_MoP7	0–65535 Used to monitor/view the MoP7 value of the programmable card.	0	●
P27.19	C_MoP8	0–65535 Used to monitor/view the MoP8 value of the programmable card.	0	●
P27.20	C_MoP9	0–65535 Used to monitor/view the MoP9 value of the programmable card.	0	●
P27.21	C_MoP10	0–65535 Used to monitor/view the MoP10 value of the programmable card.	0	●

Function code	Name	Description	Default value	Modify
P27.22	Digital input terminal status of programmable card	0–0x3F Bit5–Bit0 indicates PS6–PS1 respectively.	0x00	●
P27.23	Digital output terminal status of programmable card	0–0x3 Bit0 indicates PRO1, and Bit1 indicates PRO2.	0x0	●
P27.24	AI1 of the programmable card	0–10.00V/0.00–20.00mA AI1 value from the PLC.	0	●
P27.25	AO1 of programmable card	0–10.00V/0.00–20.00mA AO1 value from the programmable card.	0	●
P27.26	Length of data sent by programmable card and PZD communication object	0x00–0x28 Ones place: Number of data sent by the programmable card and the Inverter (PLC card sent + Inverter sent table 1 + Inverter sent table 2) 0: 0+24+60 1: 12+24+60 2: 24+24+60 3: 36+24+60 4: 48+24+60 5: 60+48+60 6: 72+24+60 7: 84+24+60 8: 96+96+96 Tens place: Card that communicates with the programmable card via PZD (Only valid when the ones place is set to 5) 0: DP 1: CANopen 2: PN **Note:** P27.26 can be changed at any time, but the change will only take effect after the re-power on.	0x03	○
P27.27	PLC card save function at power failure	0–1 0: Disable 1: Enable	1	◎

P28 group—Master/slave control functions

Function code	Name	Description	Default value	Modify
P28.00	Master/slave mode selection	0: Master/slave control is invalid 1: The local machine is a master 2: The local machine is a slave	0	◎
P28.01	Master/slave communication data selection	0: CAN 1: Reserved	0	◎
P28.02	Master/slave control mode	Setting range: 0x000–0x112 Ones place: Master/slave running mode selection 0: Master/slave mode 0 (The master and slave adopt speed control and maintains the power balance by droop control) 1: Master/slave mode 1 (The master and slave must be in the same type of vector control mode. The master is speed control, and the slave will be forced to be in the torque control mode. 2: Master/slave mode 2 Start in the slave first speed mode (master/slave mode 0) and then switch to torque mode at a certain frequency point (master/slave mode 1) Tens place: Slave start command source selection 0: Follow the master to start 1: Determined by P00.01 Hundreds place: Slave transmitting/master receiving data enable 0: Enable 1: Disable	0x001	◎
P28.03	Slave speed gain	0.0–500.0%	100.0%	○
P28.04	Slave torque gain	0.0–500.0%	100.0%	○
P28.05	Speed/torque mode switching frequency point in master/slave mode 2	0.00–10.00Hz	5.00Hz	○
P28.06	Slave count	1–15	1	◎
P28.07–P28.08	Reserved	/	/	/
P28.09	CAN slave torque offset	-100.0–100.0%	0.0%	○

Function code	Name	Description	Default value	Modify
P28.10	Enabling PT100/PT1000 to detect temperature	0x00–0x11 Ones place: PT100 temperature detection 0: Disable 1: Enable Tens place: PT1000 temperature detection 0: Disable 1: Enable	0x00	◎
P28.11	EC PT100 detected OH protection threshold	Protection threshold of overheating (OH) detected by the expansion card (EC) with PT100. 0.0–150.0°C	120.0°C	○
P28.12	EC PT100 detected OH pre-alarm threshold	Pre-alarm threshold of OH detected by the EC with PT100. 0.0–150.0°C	100.0°C	○
P28.13	EC PT100 detected temperature calibration upper limit	Calibration upper limit of temperature detected by the EC with PT100. 50.0–150.0°C	120.0°C	○
P28.14	EC PT100 detected temperature calibration lower limit	Calibration lower limit of temperature detected by the EC with PT100. -20.0–50.0°C	10.0°C	○
P28.15	EC PT100 calibration upper limit digital	0–4096	2950	○
P28.16	EC PT100 calibration lower limit digital	0–4096	1270	○
P28.17	EC PT1000 detected OH protection threshold	0.0–150.0°C	120.0°C	○
P28.18	EC PT1000 detected OH pre-alarm threshold	0.0–150.0°C	100.0°C	○
P28.19	PT1000 detected temperature calibration upper limit	50.0–150.0°C	120.0°C	○

Function code	Name	Description	Default value	Modify
P28.20	EC PT1000 detected temperature calibration lower limit	-20.0–50.0°C	10.0°C	○
P28.21	EC PT1000 calibration upper limit digital	0–4096	3100	○
P28.22	EC PT1000 calibration lower limit digital	0–4096	1100	○
P28.23	Detecting for PT100/PT1000 disconnection from EC	0x00–0x11 Ones place: PT100 disconnection detection 0: Disable 1: Enable Tens place: PT1000 disconnection detection 0: Disable 1: Enable	0x00	◎
P28.24	Enabling digital calibration in EC PT100/PT1000 temperature detection	0–4 0: Disable 1: Enable PT100 lower limit digital calibration. 2: Enable PT100 upper limit digital calibration. 3: Enable PT1000 lower limit digital calibration. 4: Enable PT1000 upper limit digital calibration.	0	○
P28.25	Type of sensor for AI/AO card to detect motor temperature	0: No temperature sensor 1: PT100 2: PT1000 3: KTY84 4: PTC **Note:** Temperature is displayed through P19.11. To measure temperature, switch the output of AO1 to current, and connect one end of the temperature resistor to AI1 and AO1, and the other end to GND.	0	◎
P28.26	AI/AO detected motor OH protection threshold	0.0–200.0°C Note: When the motor temperature exceeds the threshold, the Inverter releases the OT alarm.	110.0°C	○

Function code	Name	Description	Default value	Modify
P28.27	AI/AO detected motor OH pre-alarm threshold	0.0–200.0°C **Note:** When the motor temperature exceeds the value, the DO terminal with function 48 (AI detected motor OH pre-alarm) outputs a valid signal.	90.0°C	○

P90 group—Tension control in speed mode

Function code	Name	Description	Default value	Modify
P90.00	Tension control mode	0: Invalid 1: Speed mode 2: Open-loop torque mode 3: Closed-loop torque mode **Note:** The value 0 indicates tension control is invalid. Select a non-0 value to enable the tension control function.	0	◎
P90.01	Winding/unwinding mode	0: Winding 1: Unwinding **Note:** The motor forward rotation direction is the winding direction. When using the tension control mode, check whether the motor rotation direction is correct in the winding mode; if not, change the rotation direction by swapping two phase wires of the motor. After the rotation direction is corrected, the winding mode can be switched to the unwinding mode by setting P90.01 to 1 or changing the winding/unwiding switchover terminals.	0	○
P90.02	Reel mechanical transmission rate	0.01–600.00 =Motor rotation speed/Reel rotation speed=Reel diameter/Motor shaft diameter	1.00	○
P90.03	Max. linear speed	0.0–6000.0 m/min	1000.0 m/min	○
P90.04	Input source of linear speed	0: Keypad 1: AI1 2: AI2 3: AI3 4: High-speed pulse HDI 5: Main traction encoder frequency-division input	0	◎
P90.05	Linear speed set through keypad	0.0–100.0%	20.0%	○
P90.06	Diameter of main traction	0.0–6000.0mm	99.0mm	○

Function code	Name	Description	Default value	Modify
P90.07	Main traction drive ratio	0.000–60.000	1.000	○
P90.08	Linear speed ACC time	0.00–600.00s	0.00s	○
P90.09	Linear speed DEC time	0.00–600.00s	0.00s	○
P90.10	Tension setting	0x00–0x14 Ones place: Tension setting source 0: Keypad 1: AI1 2: AI2 3: AI3 4: High-speed pulse HDI Tens place: Multiplier of max. tension (P90.12) 0: 1 1: 10	0x00	◎
P90.11	Tension set through keypad	0.0–100.0%	10.0%	○
P90.12	Max. tension	When the tens place of P90.10 is 0, the setting range is 0–60000N. When the tens place of P90.10 is 1, the setting range is (0–60000)*10N.	1000N	○
P90.13	Roll diameter calculation mode	0: Not calculated 1: AI1 2: AI2 3: AI3 4: High-speed pulse HDI 5: Linear speed 6: Thickness (of wire) 7: Thickness (of strip)	0	◎
P90.14	Roll diameter calculation delay time	0.0–100.0s	1.0s	○
P90.15	Min. roll diameter	0.0mm–P90.16	50.0mm	○
P90.16	Max. roll diameter	P90.15–5000.0mm	1000.0 mm	○
P90.17	Initial roll diameter 1	P90.15–P90.16 mm	100.0 mm	○
P90.18	Initial roll diameter 2	P90.15–P90.16 mm	100.0 mm	○
P90.19	Initial roll diameter 3	P90.15–P90.16 mm	100.0 mm	○

Function code	Name	Description	Default value	Modify
P90.20	Linear speed roll diameter calculation filter time	0.000–60.000s	2.000s	○
P90.21	Linear speed roll diameter calculation restriction	0x00–0x11 Ones place: 0:No 1: Restrict changes in reverse direction Tens place: 0: No 1: Automatic restriction according to running frequency and material thickness	0x00	○
P90.22	Material thickness	0.001–65.535mm	0.010 mm	○
P90.23	Number of coils per layer	1–10000	1	◎
P90.24	Revolution counting function selection	0–2 0: Digital terminal input 1: PG card input (Applicable to thickness calculation method) 2: Running frequency (No input automatic revolution counting)	0	◎
P90.25	Number of pulses per revolution	1–60	1	◎
P90.26	Roll diameter set value	0.0–100.0%	80.0%	○
P90.27	Roll diameter reset setting	0x0000–0x1111 Ones place: At stop 0: Remain current roll diameter 1: Restore to initial roll diameter Tens place: Power off at running 0: Remain current roll diameter 1: Restore to initial roll diameter Hundreds place: Reach the roll diameter set value 0: Remain current roll diameter 1: Restore to initial roll diameter Thousands place: Terminal reset limitation 0: Reset allowed at running 1: Reset only allowed at stop	0x1000	○
P90.28	Tension PID output reference	0–1 0: Max. value 1: Given value	0	○
P90.29	Tension PID	0–5	0	○

Function code	Name	Description	Default value	Modify
	parameter source	0: First group of P90 1: Roll diameter (max. roll diameter) 2: Main reference frequency (max. Frequency) 3: Running linear speed (max. linear speed) 4: Deviation (Reference 100%) 5: Terminal		
P90.30	Group 1 proportional gain	0.000–30.000	0.030	○
P90.31	Group 1 integral time	0.00–30.00s	5.00s	○
P90.32	Group 1 differential time	0.00–10.00s	0.00s	○
P90.33	Group 2 proportional gain	0.000–30.000	0.030	○
P90.34	Group 2 integral time	0.00–30.00s	5.00s	○
P90.35	Group 2 differential time	0.00–10.00s	0.00s	○
P90.36	PID parameter adjustment reference point 1	0.0%–P90.37	10.0%	○
P90.37	PID parameter adjustment reference point 2	P90.36–100.0%	50.0%	○
P90.38	Min. frequency for roll diameter calculation	0.00–50.00Hz	0.30Hz	○
P90.39	Min. linear speed for roll diameter calculation	0.0–100.0%	3.0%	○

P91 group—Tension control in torque mode

Function code	Name	Description	Default value	Modify
P91.00–P91.39	Reserved	/	/	/
P91.00	Tension control zero speed	0–1 0: Max. linear speed	0	◎

Function code	Name	Description	Default value	Modify
	reference	1: Max. frequency		
P91.01	Tension control zero speed threshold	0.0–50.0%	0.5%	○
P91.02	Zero speed offset	0.0–50.0%	2.0%	○
P91.03	Upper-limit frequency source of torque control	0–3 0: P03.14, P03.15 1: Forward rotation limit set by line speed 2: Reverse rotation limit set by line speed 3: Forward and reverse rotations limit set by line speed	3	◎
P91.04	Running frequency upper limit offset of tension control	0.0–100.0%	5.0%	○
P91.05	Differential separation threshold	0.0–100.0%	5.0%	○
P91.06	PID restricts reverse limit at zero speed	0–1 0: Enable 1: Disable	0	◎
P91.07	Torque compensation selection	0x000–0x111 Ones place: Frictional torque compensation 0: No 1: Yes Tens place: Inertia compensation 0: No 1: Yes Hundreds place: Compensation direction 0: In line with torque direction 1: Different from torque direction	0x000	◎
P91.08	System mechanical parameters identification	0–2 0: No operation 1: Enable system mechanical inertia identification 2: Enable mechanical friction torque identification	0	◎
P91.09	Static friction torque compensation coefficient	0.0–100.0%	0.0%	○
P91.10	Sliding friction torque	0.0–100.0%	0.0%	○

Function code	Name	Description	Default value	Modify
	compensation coefficient 1			
P91.11	Sliding friction torque compensation coefficient 2	0.0–100.0%	0.0%	○
P91.12	Sliding friction torque compensation coefficient 3	0.0–100.0%	0.0%	○
P91.13	High speed torque compensation coefficient	0.0–100.0%	0.0%	○
P91.14	Compensation frequency point of static friction torque	0.0%–P91.15	1.0%	○
P91.15	Compensation frequency point of sliding friction torque 1	P91.14–P91.16%	20.0%	○
P91.16	Compensation frequency point of sliding friction torque 2	P91.15–P91.17%	50.0%	○
P91.17	Compensation frequency point of sliding friction torque 3	P91.16–P91.18%)	80.0%	○
P91.18	High-speed friction torque compensation frequency point	P91.17–100.0%	100.0%	○
P91.19	ACC/DEC frequency source	0–1 0: Linear speed 1: Running frequency	0	◎
P91.20	Material density	0–30000 kg/m^3	0 kg/m^3	○
P91.21	Reel width	0.000–60.000m	0.000m	○
P91.22	ACC inertia compensation coefficient	0.0–100.0%	10.0%	○

Function code	Name	Description	Default value	Modify
P91.23	DEC inertia compensation coefficient	0.0–100.0%	10.0%	○
P91.24	Tension taper coefficient source	0–4 0: Keypad 1: AI1 2: AI2 3: AI3 4: High-speed pulse HDI	0	◎
P91.25	Tension taper set through keypad	0.0–100.0%	30.0%	○
P91.26	Tension taper compensation correction	0.0–5000.0mm	0.0mm	○
P91.27	Tension taper curve selection	0–1 0: Inverse proportional curve 1: Multi-point curve	0	◎
P91.28	Roll diameter value 1	0.0–5000.0mm	200.0 mm	○
P91.29	Tension taper coefficient for roll diameter value 1	0.0–50.0%	3.0%	○
P91.30	Roll diameter value 2	0.0–5000.0mm	500.0 mm	○
P91.31	Tension taper coefficient for roll diameter value 2	0.0–50.0%	7.0%	○
P91.32	Tension offset value at zero speed	0.0–300.0%	0.0%	○
P91.33	Present roll diameter setting	0.0–5000.0mm	0.0mm	◎

P92 group—Tension optimization

Function code	Name	Description	Default value	Modify
P92.00	Pre-drive speed gain	0.0–100.0%	100.0%	○
P92.01	Pre-drive torque limit	0–2 0: Set based on P03.20, P03.21 1: Set based on P93.02 2: Set based on the set tension	2	○

Function code	Name	Description	Default value	Modify
P92.02	Pre-drive torque limit setting	0.0–200.0%	100.0%	○
P92.03	Zero bit conversion enabling	0–1 0: Disable 1: Enable	0	◎
P92.04	Initial zero bit	0.0–100.0%	10.0%	○
P92.05	Final zero bit	0.0–100.0%	50.0%	○
P92.06	Conversion time from initial zero bit to final zero bit	0.00–60.00s	5.00s	○
P92.07	Conversion time from final zero bit to initial zero bit	0.00–60.00s	5.00s	○
P92.08	Feeding interrupt detection mode	0–3 0: Not detect 1: Detect based on digital value 2: Detect based on roll diameter calculation value 3: Detect based on feedback position	0	○
P92.09	Feeding interrupt detection start delay time	0.0–200.0s	20.0s	○
P92.10	Frequency lower limit of feeding interrupt detection	0.00–300.00Hz	10.00 Hz	○
P92.11	Error range of feeding interrupt detection	0.1–50.0%	10.0%	○
P92.12	Determination delay time of feeding interrupt detection	0.1–60.0s	1.0s	○
P92.13	Handling mode of feeding interrupt	0x000–0x111 Ones place: Stop mode 0: Decelerate to stop in emergency manner 1: Coast to stop Tens place: Alarm mode 0: Stop in enabled stop mode without reporting an alarm 1: Report an alarm and coast to stop	0x000	◎

Function code	Name	Description	Default value	Modify
		Hundreds place: Roll diameter memory function of feeding interrupt 0: Disable 1: Enable		
P92.14	Stop braking frequency	0.00–300.00Hz	1.50Hz	○
P92.15	Stop braking time	0.0–600.0s	0.0s	○

P93 group—Tension control status viewing

Function code	Name	Description	Default value	Modify
P93.00	Actual control mode	0–3 0: Invalid tension control 1: Close-loop tension speed control 2: Open loop tension torque control 3: Close-loop tension torque control	0	●
P93.01	Actual winding/ unwinding mode	0–1 0: Winding 1: Unwinding	0	●
P93.02	Initial roll diameter	0.0–5000.0mm	0.0mm	●
P93.03	Reset roll diameter	0.0–5000.0mm	0.0mm	●
P93.04	Roll diameter change rate	0.00–655.35 mm/s	0.00 mm/s	●
P93.05	Present roll diameter	0.0–5000.0mm	0.0mm	●
P93.06	Roll diameter for linear speed calculation	0.0–5000.0mm	0.0mm	●
P93.07	Set linear speed	0.0–6000.0 m/min	0.0 m/min	●
P93.08	Present linear speed	0.0–6000.0 m/min	0.0 m/min	●
P93.09	Main reference frequency	0.00–600.00Hz	0.00 Hz	●
P93.10	Actual proportional gain	0.00–30.00	0.00	●
P93.11	Actual integral time	0.00–30.00s	0.00s	●
P93.12	Proportional output value	0–65535	0	●

Function code	Name	Description	Default value	Modify
P93.13	Integral output value	0–65535	0	●
P93.14	PID upper limit	-100.0–100.0%	0.0%	●
P93.15	PID lower limit	-100.0–100.0%	0.0%	●
P93.16	PID output frequency	-99.99–99.99Hz	0.00Hz	●
P93.17	Main traction running frequency	-300.0–300.0Hz	0.0Hz	●
P93.18	Set tension	0–30000N	0N	●
P93.19	Tension taper coefficient	0.0–100.0%	0.0%	●
P93.20	Actual tension	0–30000N	0N	●
P93.21	Basic torque reference value	-300.0–300.0%	0.0%	●
P93.22	Friction compensation torque value	-300.0–300.0%	0.0%	●
P93.23	System rotational inertia	0.00–655.35 $kg.m^2$	0.00 $kg.m^2$	●
P93.24	Frequency change rate	-99.99–327.67 Hz/s	0.00 Hz/s	●
P93.25	Torque compensation value of system rotational inertia	-300.0–300.0%	0.0%	●
P93.26	Reference value after torque compensation	-300.0–300.0%	0.0%	●
P93.27	PID output torque	-300.0–300.0%	0.0%	●
P93.28	Final output torque	-300.0–300.0%	0.0%	●
P93.29	Measured tension	0–30000N	0N	●
P93.30	Number of material turns on the reel	-100–32767	0	●
P93.31	Length of material on the reel	0–65535m	0m	●
P93.32	Length increment	0.0–6553.5m	0.0m	●

7 Troubleshooting

7.1 What this chapter contains

The chapter tells users how to reset faults and check faults history. A complete list of alarms and fault information as well as possible causes and corrective measures are presented in this chapter.

	Only well-trained and qualified professionals are allowed to carry out the work described in this chapter. Operations should be carried out according to the instructions presented in 1 "Safety Precautions".

7.2 Indications of alarms and faults

The fault is indicated by indicators (refer to the "Keypad operation process"). When TRIP indicator is on, the alarm or fault code displayed in the keypad indicates the Inverter is in exception state. This chapter covers most of the alarms and faults, and their possible causes and corrective measures, if users cannot figure out the alarm or fault causes, contact local HITACHI office.

7.3 Fault reset

Users can reset the Inverter via STOP/RST key on the keypad, digital inputs, or by cutting off the Inverter power. After faults are removed, the motor can be start again.

7.4 Fault history

P07.27–P07.32 record the six latest fault types; P07.33–P07.40, P07.41–P07.48, and P07.49–P07.56 record the running data of the Inverter when the latest three faults occurred.

7.5 Inverter faults and solutions

When fault occurred, process the fault as shown below.

1. When Inverter fault occurred, confirm whether keypad display is improper? If yes, contact HITACHI;
2. If keypad works properly, check the function codes in P07 group to confirm the corresponding fault record parameters, and determine the real state when current fault occurred through parameters;
3. Check the table below to see whether corresponding exception states exist based on the corresponding corrective measures;
4. Rule out the faults or ask for help from professionals;
5. After confirming faults are removed, reset the fault and start running.

7.5.1 Details of faults and solutions

Note: The numbers enclosed in square brackets such as [1], [2] and [3] in the **Fault type** column in the following table indicate the Inverter fault type codes read through communication.

Fault code	Fault type	Possible cause	Corrective measures
OUt1	[1] Inverter unit U phase protection	Acceleration is too fast; IGBT module is damaged; Misacts caused by interference; drive wires are poorly connected ; To-ground short circuit occurs	Increase acceleration time; Replace the power unit; Check drive wires; Check whether there is strong interference surrounds the peripheral equipment
OUt2	[2] Inverter unit V phase protection		
OUt3	[3] Inverter unit W phase protection		
OV1	[7] Overvoltage during acceleration	Deceleration time is too short; Exception occurred to input voltage; Large energy feedback; Lack of brake units; Dynamic brake is not enabled, and the deceleration time is too short.	Check input power; Check whether load deceleration time is too short; or the motor starts during rotating; Install dynamic brake units; Check the setup of related function codes
OV2	[8] Overvoltage during deceleration		
OV3	[9] Overvoltage during constant speed running		
OC1	[4] Overcurrent during acceleration	Acceleration is too fast; Grid voltage is too low; Inverter power is too small; Load transient or exception occurred; To-ground short circuit or output phase loss occur; Strong external interference sources; Overvoltage stall protection is not enabled	Increase ACC/DEC time; Check input power; Select the Inverter with larger power; Check if the load is short circuited (to-ground short circuit or line-to-line short circuit) or the rotation is not smooth; Check the output wiring; Check if there is strong interference; Check the setup of related function codes.
OC2	[5] Overcurrent during deceleration		
OC3	[6] Overcurrent during constant speed running		
UV	[10] Bus undervoltage fault	Grid voltage is too low; Overvoltage stall protection is not enabled	Check grid input power; Check the setup of related function codes
OL1	[11] Motor overload	Grid voltage is too low; Rated motor current is set improperly; Motor stall or load jumps violently	Check grid voltage; Reset rated motor current; Check the load and adjust torque boost
OL2	[12] Inverter overload	Acceleration is too fast; The motor in rotating is restarted; Grid voltage is too low; Load is too large; Power is too small;	Increase acceleration time; Avoid restart after stop; Check grid voltage; Select the Inverter with larger power; Select proper motor
SPI	[13] Phase loss on input side	Phase loss or violent fluctuation occurred to R, S and T input	Check the input power; Check installation wiring

Fault code	Fault type	Possible cause	Corrective measures
SPO	[14] Phase loss on output side	Phase loss occurred to U, V, W output (or the three phases of motor is asymmetrical)	Check the output wiring; Check the motor and cable
OH1	[15] Overheat of rectifier module	Air duct is blocked or fan is damaged; Ambient temperature is too high; Long-time overload running	Ventilate the air duct or replace the fan; Lower the ambient temperature
OH2	[16] Overheat of inverter module		
EF	[17] External fault	SI external fault input terminal acts	Check external device input
CE	[18] Modbus/Modbus TCP communication fault	Baud rate is set improperly; Communication line fault; Communication address error; Communication suffers from strong interference	Set proper baud rate; Check the wiring of communication interfaces; Set proper communication address; Replace or change the wiring to enhance anti-interference capacity
ItE	[19] Current detection fault	Poor contact of the connector of control board; Hall component is damaged; Exception occurred to amplification circuit	Check the connector and re-plug; Replace the hall component; Replace the main control board
tE	[20] Motor autotuning fault	Motor capacity does not match with the Inverter capacity, this fault may occur easily if the difference between them is exceeds five power classes; Motor parameter is set improperly; The parameters gained from autotuning deviate sharply from the standard parameters; Autotuning timeout	Change the Inverter model, or adopt V/F mode for control; Set proper motor type and nameplate parameters; Empty the motor load and carry out autotuning again; Check motor wiring and parameter setup; Check whether upper limit frequency is larger than 2/3 of the rated frequency
EEP	[21] EEPROM fault	R/W error occurred to the control parameters; EEPROM is damaged	Press STOP/RST to reset; Replace the main control board
PIDE	[22] PID feedback offline fault	PID feedback offline; PID feedback source disappears;	Check PID feedback signal wires; Check PID feedback source

Fault code	Fault type	Possible cause	Corrective measures
bCE	[23] Braking unit fault	Brake circuit fault or brake tube is damaged.	Check the brake unit, replace with new brake tubes;
END	[24] Running time is up	The actual running time of the Inverter is larger than the set running time	Ask help from the supplier, adjust the set running time
OL3	[25] Electronic overload fault	The Inverter releases overload pre-alarm based on the set value	Check the load and overload pre-alarm threshold
PCE	[26] Keypad communication fault	The keypad wire is poorly contacted or disconnected; The keypad wire is too long and suffers strong interference; Circuit fault occurred to the keypad or communication part of the main board	Check the keypad wires to confirm whether fault exists; Check the surroundings to rule out interference source; Replace the hardware and ask for maintenance service
UPE	[27] Parameter upload error	The keypad wire is poorly contacted or disconnected; The keypad wire is too long and suffers strong interference; Circuit fault occurred to the keypad or communication part of the main board	Check the surroundings to rule out interference source; Replace the hardware and ask for maintenance service; Replace the hardware and ask for maintenance service
DNE	[28] Parameter download error	The keypad wire is poorly contacted or disconnected; The keypad wire is too long and suffers strong interference; Data storage error occurred to the keypad	Check the surroundings to rule out interference source; Replace the hardware and ask for maintenance service; Re-backup keypad data
ETH1	[32] To-ground short circuit fault 1	Inverter output is short connected to the ground; Current detection circuit is faulty; Actual motor power setup deviates sharply from the Inverter power	Check whether motor wiring is proper; Replace the hall component; Replace the main control board; Reset the motor parameters properly
ETH2	[33] To-ground short circuit fault 1	Inverter output is short connected to ground; Current detection circuit is faulty; Actual motor power setup deviates sharply from the Inverter power	Check whether motor wiring is proper; Replace the hall component; Replace the main control board; Reset the motor parameters properly

Fault code	Fault type	Possible cause	Corrective measures
dEu	[34] Speed deviation fault	Load is too heavy, or stall occurred	Check the load to ensure it is proper, increase the detection time; Check whether control parameters are set properly
STo	[35] Maladjustment fault	Control parameters of synchronous motor is set improperly; The parameter gained from autotuning is inaccurate; The Inverter is not connected to motor	Check the load to ensure it is proper, Check whether load is proper; Check whether control parameters are set correctly; Increase maladjustment detection time
LL	[36] Electronic underload fault	The Inverter performs underload pre-alarm based on the set value	Check the load and overload pre-alarm threshold
ENC1o	[37] Encoder offline fault	Encoder line sequence is wrong, or signal wires are poorly connected	Check the encoder wiring
ENC1d	[38] Encoder reversal fault	The encoder speed signal is contrary to the motor running direction	Reset encoder direction
ENC1Z	[39] Encoder Z pulse offline fault	Z signal wires are disconnected	Check the wiring of Z signal
OT	[59] Motor over-temperature fault	Motor over-temperature input terminal is valid; Exception occurred to t temperature detection Exception occurred to resistor; Long-time overload running or exception occurred	Check the wiring of motor over-temperature input terminal (terminal function 57); Check whether temperature sensor is proper; Check the motor and perform maintenance on the motor
STO	[40] Safe torque off	Safe torque off function is enabled by external forces	/
STL1	[41] Exception occurred to safe circuit of channel H1	The wiring of STO is improper; Fault occurred to external switch of STO; Hardware fault occurred to safety circuit of channel H1	Check whether terminal wiring of STO is proper and firm enough; Check whether external switch of STO can work properly; Replace the control board
STL2	[42] Exception occurred to channel H2 safe circuit	The wiring of STO is improper; Fault occurred to external switch of STO; Hardware fault occurred to	Check whether terminal wiring of STO is proper and firm enough; Check whether external switch of STO can work

Fault code	Fault type	Possible cause	Corrective measures
		safety circuit of channel H2	properly; Replace the control board
STL3	[43] Exception occurred to channel H1 and channel H2	Hardware fault occurred to STO circuit	Replace the control board
CrCE	[44] Safety code FLASH CRC check fault	Control board is faulty	Replace the control board
E-Err	[55] Repetitive expansion card type	The two inserted expansion cards are of the same type	Users should not insert two cards with the same type; check the type of expansion card, and remove one card after power down
ENCUV	[56] Encoder UVW loss fault	No electric level variation occurred to UVW signal	Check the wiring of UVW; Encoder is damaged
F1-Er	[60] Failed to identify the expansion card in card slot 1	There is data transmission in interfaces of card slot 1, however, it cannot read the card type	Confirm whether the expansion card inserted can be supported; Stabilize the expansion card interfaces after power down, and confirm whether fault still occurs at next power-on; Check whether the insertion port is damaged, if yes, replace the insertion port after power down
F2-Er	[61] Failed to identify the expansion card in card slot 2	There is data transmission in interfaces of card slot 2, however, it cannot read the card type	Confirm whether the expansion card inserted can be supported; Stabilize the expansion card interfaces after power down, and confirm whether fault still occurs at next power-on; Check whether the insertion port is damaged, if yes, replace the insertion port after power down
F3-Er	[62] Failed to identify the expansion card in card slot 3	There is data transmission in interfaces of card slot 3, however, it cannot read the card type	Confirm whether the expansion card inserted can be supported; Stabilize the expansion card interfaces after power down, and confirm whether fault still occurs at next power-on; Check whether the insertion port is damaged, if yes,

Fault code	Fault type	Possible cause	Corrective measures
			replace the insertion port after power down
C1-Er	[63] Communication timeout occurred to the expansion card in card slot 1	There is no data transmission in interfaces of card slot 1	Confirm whether the expansion card inserted can be supported; Stabilize the expansion card interfaces after power down, and confirm whether fault still occurs at next power-on; Check whether the insertion port is damaged, if yes, replace the insertion port after power down
C2-Er	[64] Communication timeout occurred to the expansion card in card slot 2	There is no data transmission in interfaces of card slot 2	Confirm whether the expansion card inserted can be supported; Stabilize the expansion card interfaces after power down, and confirm whether fault still occurs at next power-on; Check whether the insertion port is damaged, if yes, replace the insertion port after power down
C3-Er	[65] Communication timeout occurred to the expansion card in card slot 3	There is no data transmission in interfaces of card slot 3	Confirm whether the expansion card inserted can be supported; Stabilize the expansion card interfaces after power down, and confirm whether fault still occurs at next power-on; Check whether the insertion port is damaged, if yes, replace the insertion port after power down
E-DP	[29] PROFIBUS card communication timeout fault	There is no data transmission between the communication card and the host computer (or PLC)	Check whether the communication card wiring is loose or dropped
E-NET	[30] Ethernet card communication timeout fault	There is no data transmission between the communication card and the host computer	Check whether the communication card wiring is loose or dropped
E-CAN	[31] CANopen card communication timeout fault	There is no data transmission between the communication card and	Check whether the communication card wiring is loose or dropped

Fault code	Fault type	Possible cause	Corrective measures
		the host computer (or PLC)	
E-PN	[57] PROFINET card communication timeout fault	There is no data transmission between the communication card and the host computer (or PLC)	Check whether the communication card wiring is loose or dropped
E-CAT	[66] EtherCAT card communication timeout fault	There is no data transmission between the communication card and the host computer (or PLC)	Check whether the communication card wiring is loose or dropped
E-BAC	[67] BACNet card communication timeout fault	There is no data transmission between the communication card and the host computer (or PLC)	Check whether the communication card wiring is loose or dropped
E-DEV	[68] DeviceNet card communication timeout fault	There is no data transmission between the communication card and the host computer (or PLC)	Check whether the communication card wiring is loose or dropped
SECAN	[58] CAN master/slave communication card communication timeout fault	There is no data transmission between the CAN master and slave communication cards	Check whether the communication card wiring is loose or dropped
S-Err	[69] CAN slave fault in master/slave synchronization	Fault occurred to one of the CAN slave Inverters	Detect the CAN slave Inverter and analyze the corresponding fault cause of the Inverter
P-E1–P-E10	[45]–[54] Programmable card customized faults 1–10	User program logic error in the programmable card. A fault occurred on the customized position.	Check the user program logic. Perform troubleshooting based on actual customized faults.
OtE1	[70] EC PT100 detected OH	The PT100 temperature sensor is inaccurate or not calibrated. Device or ambient temperature is too high.	Calibrate the sensor through parameter settings. Lower the device or ambient temperature.
OtE2	[71] EC PT1000 detected OH	The PT1000 temperature sensor is inaccurate or not calibrated. Device or ambient temperature is too high.	Calibrate the sensor through parameter settings. Lower the device or ambient temperature.
E-EIP	[72] EtherNet IP communication timeout	There is no data transmission between the communication card and	Check whether the communication card wiring is loose or dropped.

Fault code	Fault type	Possible cause	Corrective measures
		the host controller (or PLC).	
E-PAO	[73] No upgrade bootloader	The upgrade bootloader is missing.	Contact us.
E-AI1	[74] AI1 disconnection	Input voltage of AI1 is too low; AI1 wiring is disconnected.	Connect a 5V or 10mA power source to check whether the input is normal; Check the wiring or replace the cables.
E-AI2	[75] AI2 disconnection	Input voltage of AI2 is too low; AI2 wiring is disconnected.	Connect a 5V or 10mA power source to check whether the input is normal; Check the wiring or replace the cables.
E-AI3	[76] AI3 disconnection	Input voltage of AI3 is too low; AI4 wiring is disconnected.	Connect a 5V or 10mA power source to check whether the input is normal; Check the wiring or replace the cables.

7.5.2 Other state

Displayed code	State type	Possible cause	Solution
PoFF	System power failure	The system is powered off or the bus voltage is too low.	Check the grid conditions.

7.6 Analysis on common faults

7.6.1 Motor fails to work

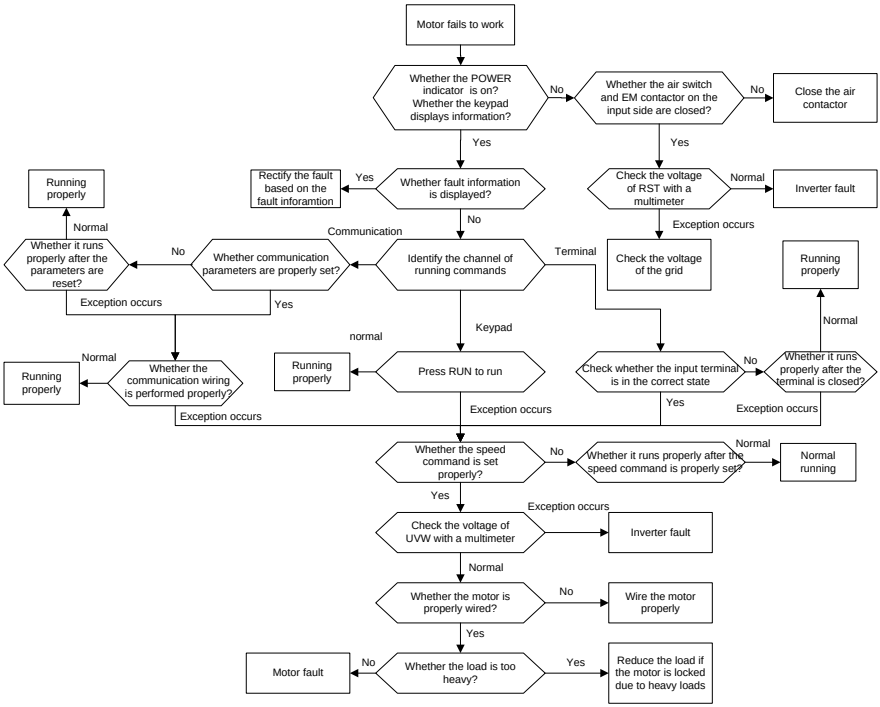

7.6.2 Motor vibrates

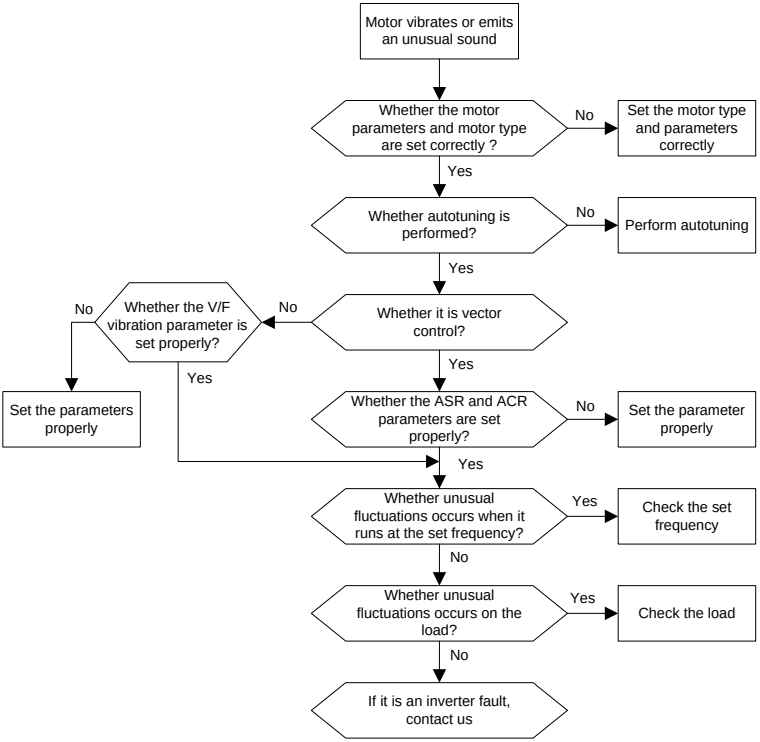

7.6.3 Overvoltage

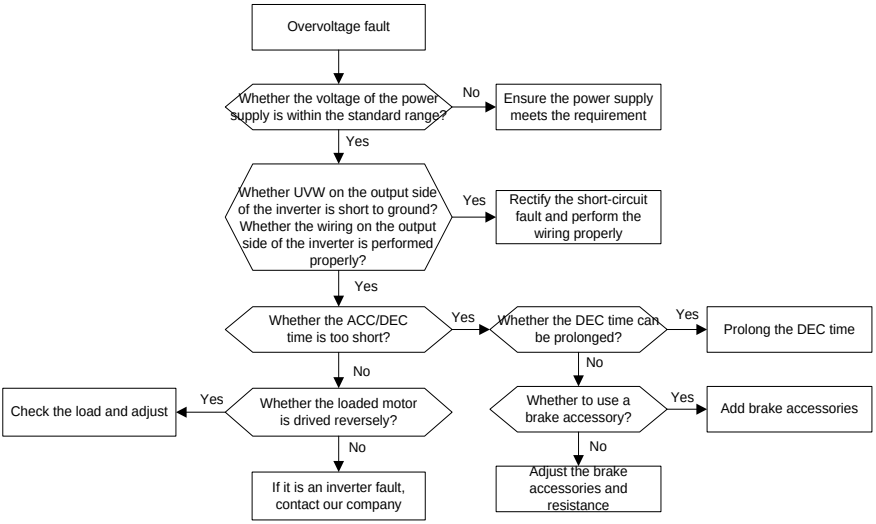

7.6.4 Undervoltage

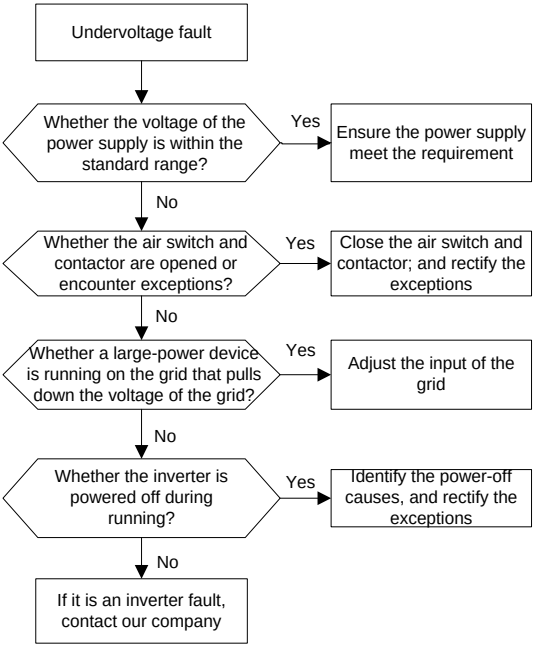

7.6.5 Unusual heating of motor

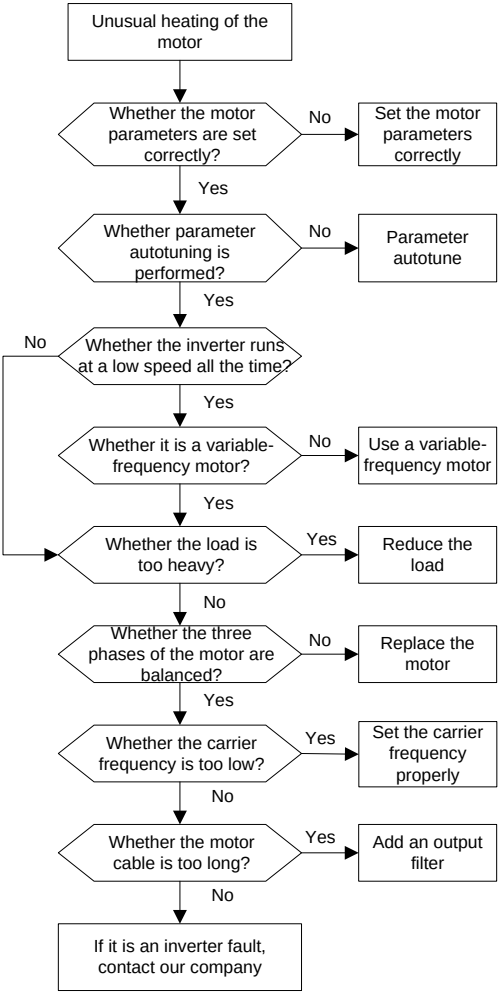

7.6.6 Inverter overheating

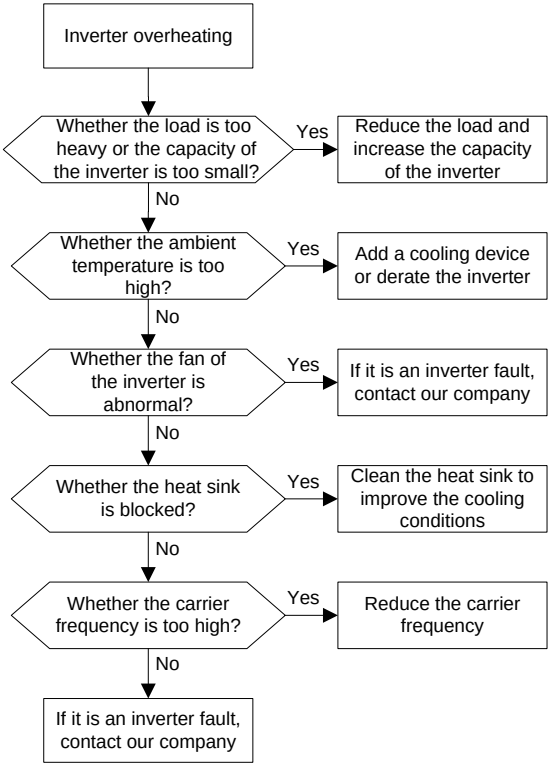

7.6.7 Motor stalls during ACC

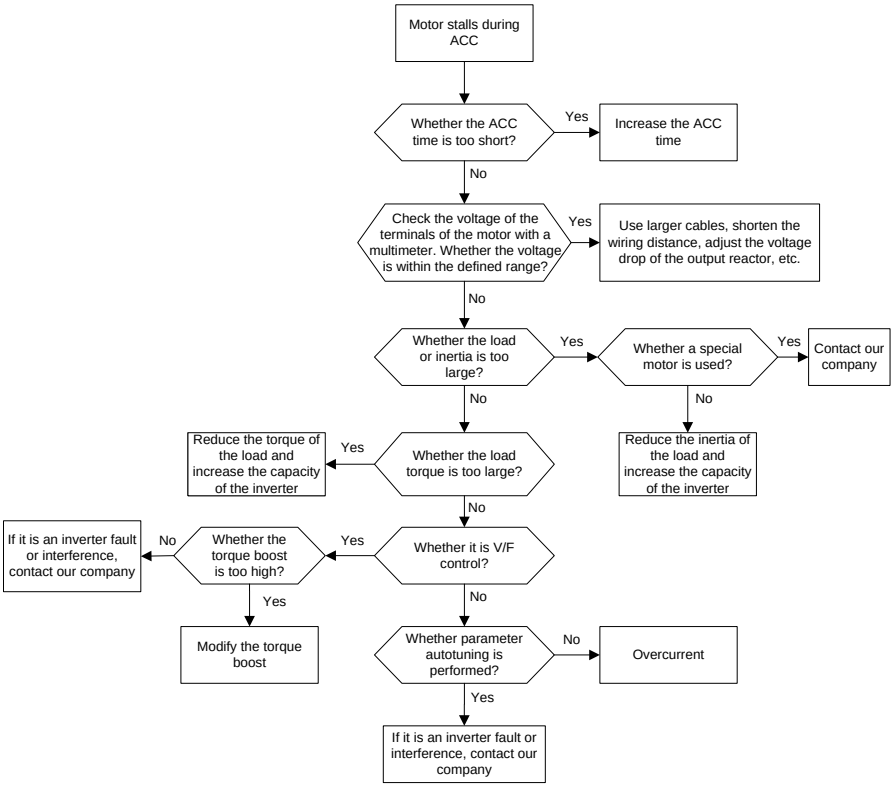

7.6.8 Overcurrent

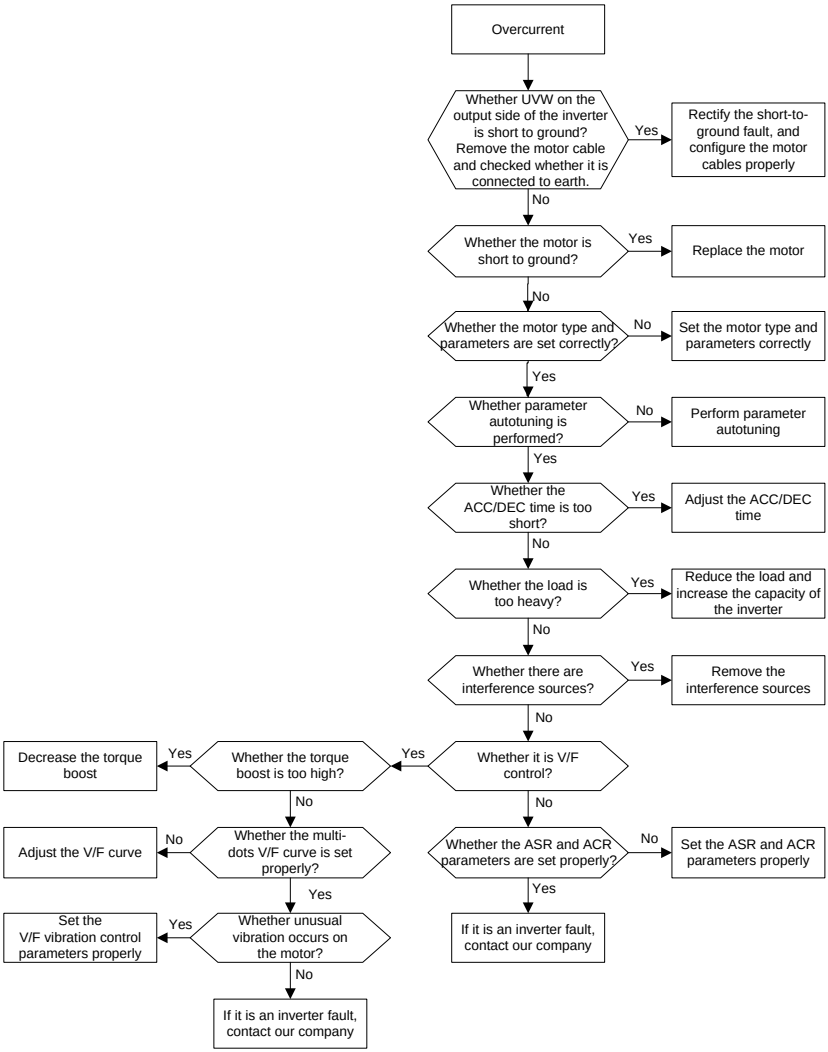

7.7 Countermeasures on common interference

7.7.1 Interference on meter switches and sensors

Interference phenomenon:

Pressure, temperature, displacement, and other signals of a sensor are collected and displayed by a human-machine interaction device. The values are incorrectly displayed as follows after the Inverter is started:

1. The upper or lower limit is wrongly displayed, for example, 999 or -999.
2. The display of values jumps (usually occurring on pressure transmitters).
3. The display of values is stable, but there is a large deviation, for example, the temperature is dozens of degrees higher than the common temperature (usually occurring on thermocouples).
4. A signal collected by a sensor is not displayed but functions as a drive system running feedback signal. For example, a Inverter is expected to decelerate when the upper pressure limit of the compressor is reached, but in actual running, it starts to decelerate before the upper pressure limit is reached.
5. After an Inverter is started, the display of all kinds of meters (such as frequency meter and current meter) that are connected to the analog output (AO) terminal of the Inverter is severely affected, displaying the values incorrectly.
6. Proximity switches are used in the system. After a Inverter is started, the indicator of a proximity switch flickers, and the output level flips.

Solution:

1. Check and ensure that the feedback cable of the sensor is 20 cm or farther away from the motor cable.
2. Check and ensure that the ground wire of the motor is connected to the PE terminal of the Inverter (if the ground wire of the motor has been connected to the ground block, you need to use a multimeter to measure and ensure that the resistance between the ground block and PE terminal is lower than 1.5 Ω).
3. Try to add a safety capacitor of 0.1 μF to the signal end of the feedback signal terminal of the sensor.
4. Try to add a safety capacitor of 0.1 μF to the power end of the sensor meter (pay attention to the voltage of the power supply and the voltage endurance of the capacitor).
5. For interference on meters connected to the AO terminal of anInverter, if AO uses current signals of 0 to 20 mA, add a capacitor of 0.47 μF between the AO and GND terminals; and if AO uses voltage signals of 0 to 10 V, add a capacitor of 0.1 μF between the AO and GND terminals.

Note:

When a decoupling capacitor is required, add it to the terminal of the device connected to the sensor. For example, if a thermocouple is to transmit signals of 0 to 20 mA to a temperature meter, the capacitor needs to be added on the terminal of the temperature meter.; if an electronic ruler is to transmit signals of 0 to 30 V to a PLC signal terminal, the capacitor needs to be added on the terminal of the PLC.

7.7.2 Interference on communication

Interference phenomenon

The interference described in this section on 485 communication mainly includes communication delay, out of sync, occasional power-off, or complete power-off that occurs after a Inverter is started.

If the communication cannot be implemented properly, regardless of whether the Inverter is running, the exception is not necessarily caused by interference. You can find out the causes as follows:

1. Check whether the 485 communication bus is disconnected or in poor contact.

2. Check whether the two ends of line A or B are connected reversely.
3. Check whether the communication protocol (such as the baud rate, data bits, and check bit) of the Inverter is consistent with that of the upper computer.

If you are sure that communication exceptions are caused by interference, you can resolve the problem through the following measures:

1. Simple inspection.
2. Arrange the communication cables and motor cables in different cable trays.
3. In multi-Inverter application scenarios, adopt the chrysanthemum connection mode to connect the communication cables between Inverters, which can improve the anti-interference capability.
4. In multi-Inverter application scenarios, check and ensure that the driving capacity of the master is sufficient.
5. In the connection of multiple Inverters, you need to configure one 120 Ω terminal resistor on each end.

Solution:

1. Check and ensure that the ground wire of the motor is connected to the PE terminal of the Inverter (if the ground wire of the motor has been connected to the ground block, you need to use a multimeter to measure and ensure that the resistance between the ground block and PE terminal is lower than 1.5 Ω).
2. Do not connect the Inverter and motor to the same ground terminal as the upper computer. It is recommended that you connect the Inverter and motor to the power ground, and connect the upper computer separately to a ground stud.
3. Try to short the signal reference ground terminal (GND) of the Inverter with that of the upper computer controller to ensure that ground potential of the communication chip on the control board of the Inverter is consistent with that of the communication chip of the upper computer.
4. Try to short GND of the Inverter to its ground terminal (PE).
5. Try to add a safety capacitor of 0.1 μF on the power terminal of the upper computer (PLC, HMI, and touch screen). During this process, pay attention to the voltage of the power supply and the voltage endurance capability of the capacitor. Alternatively, you can use a magnet ring (Fe-based nanocrystalline magnet rings are recommended). Put the power L/N line or +/- line of the upper computer through the magnet ring in the same direction and wind 8 coils around the magnet ring.

7.7.3 Failure to stop and indicator shimmering due to motor cable coupling

Interference phenomenon:

1. Failure to stop

In a Inverter system where an S terminal is used to control the start and stop, the motor cable and control cable are arranged in the same cable tray. After the system is started properly, the S terminal cannot be used to stop the Inverter.

2. Indicator shimmering

After a Inverter is started, the relay indicator, power distribution box indicator, PLC indicator, and indication buzzer shimmers, blinks, or emits unusual sounds unexpectedly.

Solution:

1. Check and ensure that the exception signal cable is arranged 20 cm or farther away from the motor cable.
2. Add a safety capacitor of 0.1 μF between the digital input terminal (S) and the COM terminal.
3. Connect the digital input terminal (S) that controls the start and stop to other idle digital input terminals in parallel. For example, if S1 is used to control the start and stop and S4 is idle, you can try to connect connect S1 to S4 in parallel.

Note: If the controller (such as PLC) in the system controls more than 5 Inverters at the same time through digital input terminals (S), this scheme is not available.

7.7.4 Leakage current and interference on RCD

Inverters output high-frequency PWM voltage to drive motors. In this process, the distributed capacitance between the internal IGBT of a Inverter and the heat sink and that between the stator and rotor of a motor may inevitably cause the Inverter to generate high-frequency leakage current to the ground. A residual current operated protective device (RCD) is used to detect the power-frequency leakage current when a grounding fault occurs on a circuit. The application of an Inverter may cause misoperation of a RCD.

1. Rules for selecting RCDs

(1) Inverter systems are special. In these systems, it is required that the rated residual current of common RCDs at all levels is larger than 200 mA, and the Inverters are grounded reliably.

(2) For RCDs, the time limit of an action needs to be longer than that of a next action, and the time difference between two actions need to be longer than 20 ms. For example, 1s, 0.5s, and 0.2s.

(3) For circuits in Inverter systems, electromagnetic RCDs are recommended. Electromagnetic RCDs have strong anti-interference capability, and thus can prevent the impact of high-frequency leakage current.

Electronic RCD	Electromagnetic RCD
Low cost, high sensitivity, small in volume, susceptible to voltage fluctuation of the grid and ambient temperature, weak anti-interference capability	Requiring highly sensitive, accurate, and stable zero-phase sequence current transformer, using permalloy high-permeability materials, complex process, high cost, not susceptible to voltage fluctuation of the power supply and ambient temperature, strong anti-interference capability

2. Solution to RCD misoperation (handling the Inverter)

(1) Try to remove the jumper cap at "EMC/J10" on the middle casing of the Inverter.

(2) Try to reduce the carrier frequency to 1.5 kHz (P00.14=1.5).

(3) Try to modify the modulation mode to "3PH modulation and 2PH modulation" (P8.40=0).

3. Solution to RCD misoperation (handling the system power distribution)

(1) Check and ensure that the power cable is not soaking in water.

(2) Check and ensure that the cables are not damaged or spliced.

(3) Check and ensure that no secondary grounding is performed on the neutral wire.

(4) Check and ensure that the main power cable terminal is in good contact with the air switch or contactor (all screws are tightened).

(5) Check 1PH powered devices, and ensure that no earth lines are used as neutral wires by these devices.

(6) Do not use shielded cables as Inverter power cables and motor cables.

7.7.5 Live device chassis

Phenomenon

After an Inverter is started, there is sensible voltage on the chassis, and you may feel an electric shock when touching the chassis. The chassis, however, is not live (or the voltage is far lower than the human safety voltage) when the Inverter is powered on but not running.

Solution

1. If there is power distribution grounding or ground stud on the site, ground the cabinet chassis of the drive system through the power ground or stud.
2. If there is no grounding on the site, you need to connect the motor chassis to the ground terminal PE of the Inverter, and ensure that the jumper at "EMC/J10" on the middle casing of the Inverter is shorted.

8 Maintenance and hardware fault diagnosis

8.1 What this chapter contains

This chapter describes how to carry out preventive maintenance on S1 IP55 high protection series Inverters.

8.2 Periodical inspection

Little maintenance is required when Inverters are installed in environments that meet requirements. The following table describes the routine maintenance periods recommended by HITACHI.

Subject		Item	Method	Criterion
Ambient environment		Check the temperature, and humidity, and whether there is vibration, dust, gas, oil spray, and water droplets in the environment.	Visual inspection, and use instruments for measurement.	The requirements stated in this manual are met.
		Check whether there are foreign matters, such as tools, or dangerous substances placed nearby.	Visual inspection	There are no tools or dangerous substances placed nearby.
Voltage		Check the voltage of the main circuit and control circuit.	Use multimeter or other instruments for measurement.	The requirements stated in this manual are met.
Keypad		Check the display of information.	Visual inspection	The characters are displayed properly.
		Check whether characters are not completely displayed.	Visual inspection	The requirements stated in this manual are met.
Main circuit	Common	Check whether the bolts loose or come off.	Screw them up.	No exception occurs.
		Check whether the machine is deformed, cracked, or damaged, or their color changes due to overheating and aging.	Visual inspection	No exception occurs.
		Check whether there are stains and dust attached.	Visual inspection	No exception occurs. **Note:** Discoloration of copper bars does not mean that they cannot work properly.
	Conductor and wire	Check whether the conductors are deformed or their color change due to overheat.	Visual inspection	No exception occurs.

Subject		Item	Method	Criterion
		Check whether the wire sheaths are cracked or their color changes.	Visual inspection	No exception occurs.
	Terminal block	Check whether there is damage.	Visual inspection	No exception occurs.
	Filter capacitor	Check whether there is electrolyte leakage, discoloration, cracks, and chassis expansion.	Visual inspection	No exception occurs.
		Check whether the safety valves are released.	Determine the service life based on the maintenance information, or measure them through electrostatic capacity.	No exception occurs.
		Check whether the electrostatic capacity is measured as required.	Use instruments to measure the capacity.	Electrostatic capacity ≥ initial value × 0.85
	Resistor	Check whether there is displacement caused due to overheat.	Olfactory and visual inspection	No exception occurs.
		Check whether the resistors are disconnected.	Visual inspection, or remove one end of the connection cable and use a multimeter for measurement.	Resistance range: ±10% (of the standard resistance)
	Transformer and reactor	Check whether there is unusual vibration sounds or smells.	Auditory, olfactory, and visual inspection	No exception occurs.
	Electromagnetic contactor and relay	Check whether there are vibration sounds in the workshop.	Auditory inspection	No exception occurs.
		Check whether the contacts are in good contact.	Visual inspection	No exception occurs.
Control circuit	Control PCB, connector	Check whether the screws and connectors loose.	Screw them up.	No exception occurs.
		Check whether there is unusual smell or discoloration.	Olfactory and visual inspection	No exception occurs.
		Check whether there are cracks, damage, deformation, or rust.	Visual inspection	No exception occurs.

Subject		Item	Method	Criterion
		Check whether there is electrolyte leakage or deformation.	Visual inspection, and determine the service life based on the maintenance information.	No exception occurs.
Cooling system	Cooling fan	Check whether there are unusual sounds or vibration.	Auditory and visual inspection, and turn the fan blades with your hand.	The rotation is smooth.
		Check whether the bolts loose.	Screw them up.	No exception occurs.
		Check whether there is decoloration caused due to overheat.	Visual inspection, and determine the service life based on the maintenance information.	No exception occurs.
	Ventilation duct	Check whether there are foreign matters blocking or attached to the cooling fan, air inlets, or air outlets.	Visual inspection	No exception occurs.

For more details about maintenance, contact the local HITACHI office, or visit our website http://www.hitachi-industrial.eu.

8.3 Cooling fan

The service life of the cooling fan of the Inverter is more than 25,000 hours. The actual service life of the cooling fan is related to the use of the Inverter and the temperature in the ambient environment.

You can view the running duration of the Inverter through P07.14 (Accumulated running time).

The increase of the bearing noise indicates a fan fault. If the Inverter is applied in a key position, replace the fan once the fan starts to generate unusual noise. You can purchase spare parts of fans from HITACHI.

Cooling fan replacement

⚠	Read 1 "Safety Precautions" carefully and follow the instructions to perform operations. Otherwise, physical injuries or damage to the device may be caused.

1. Stop the device, disconnect the AC power supply, and wait for a time no shorter than the waiting time designated on the Inverter.
2. Open the cable clamp to loose the fan cable (for Inverters of 004G/5R5P–030G/037P, the middle casing needs to be removed).
3. Remove the fan cable.
4. Remove the fan with a screwdriver.
5. Install a new fan in the Inverter in the reverse steps. Assemble the Inverter. Ensure that the

air direction of the fan is consistent with that of the Inverter, as shown in the Figure 8-1.

6. Power on the Inverter.

Figure 8-1 Fan maintenance for Inverters of 7R5G/011P or higher

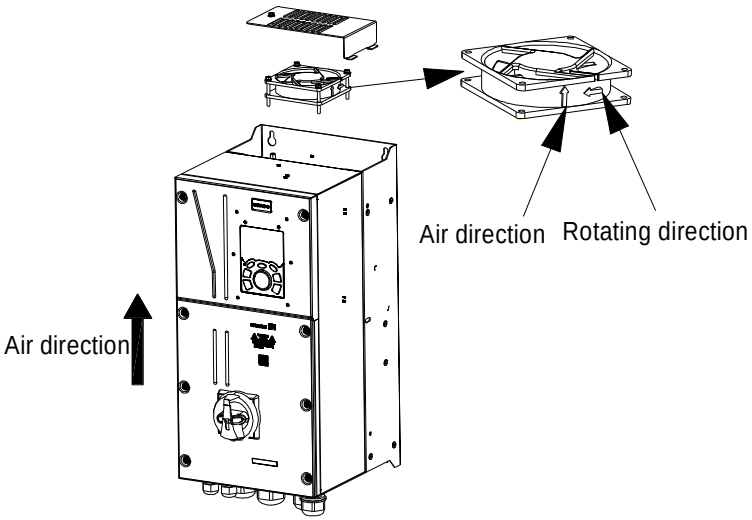

8.4 Capacitor

8.4.1 Capacitor reforming

If the Inverter has been left unused for a long time, you need to follow the instructions to reform the DC bus capacitor before using it. The storage time is calculated from the date the Inverter is delivered.

Storage time	Operation principle
Less than 1 year	No charging operation is required.
1 to 2 years	The Inverter needs to be powered on for 1 hour before the first running command.
2 to 3 years	Use a voltage controlled power supply to charge the Inverter: Charge the Inverter at 25% of the rated voltage for 30 minutes, and then charge it at 50% of the rated voltage for 30 minutes, at 75% for another 30 minutes, and finally charge it at 100% of the rated voltage for 30 minutes.
More than 3 years	Use a voltage controlled power supply to charge the Inverter: Charge the Inverter at 25% of the rated voltage for 2 hours, and then charge it at 50% of the rated voltage for 2 hours, at 75% for another 2 hours, and finally charge it at 100% of the rated voltage for 2 hours.

The method for using a voltage controlled power supply to charge the Inverter is described as follows:

The selection of a voltage controlled power supply depends on the power supply of the Inverter. For Inverters with an incoming voltage of 1PH/3PH 230 V AC, you can use a 230 V AC/2 A

voltage regulator. Both 1PH and 3PH Inverters can be charged with a 1PH voltage controlled power supply (connect L+ to R, and N to S or T). All the DC bus capacitors share one rectifier, and therefore they are all charged.

For Inverters of a high voltage class, ensure that the voltage requirement (for example, 380 V) is met during charging. Capacitor changing requires little current, and therefore you can use a small-capacity power supply (2 A is sufficient).

The method for using a resistor (incandescent lamp) to charge the drive is described as follows:

If you directly connect the drive device to a power supply to charge the DC bus capacitor, it needs to be charged for a minimum of 60 minutes. The charging operation must be performed at a normal indoor temperature without load, and you must connect a resistor in series mode in the 3PH circuit of the power supply.

For a 380 V drive device, use a resistor of 1 kΩ/100W. If the voltage of the power supply is no higher than 380 V, you can also use an incandescent lamp of 100W. If an incandescent lamp is used, it may go off or the light may become very weak.

Figure 8-2 Charging circuit example of driving devices of 380 V

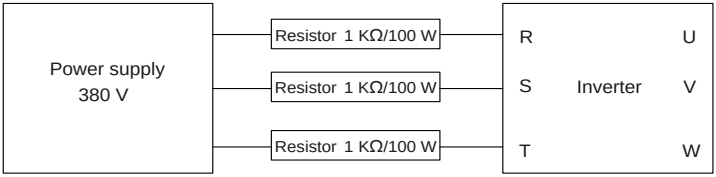

8.4.2 Electrolytic capacitor replacement

⚠	Read 1 "Safety Precautions" carefully and follow the instructions to perform operations. Otherwise, physical injuries or damage to the device may be caused.

The electrolytic capacitor of a Inverter must be replaced if it has been used for more than 35,000 hours. For details about the replacement, contact the local HITACHI office.

8.5 Power cable

⚠	Read 1 "Safety Precautions" carefully and follow the instructions to perform operations. Otherwise, physical injuries or damage to the device may be caused.

1. Stop the Inverter, disconnect the power supply, and wait for a time no shorter than the waiting time designated on the Inverter.
2. Check the connection of the power cables. Ensure that they are firmly connected.
3. Power on the Inverter.

9 Communication protocol

9.1 What this chapter contains

This chapter describes the communication protocol of S1 IP55 high-ingress protection products.

S1 IP55 high-ingress protection inverters provide RS485 communication interfaces and adopt the master-slave communication based on the international standard Modbus communication protocol. You can implement centralized control (setting commands for controlling the Inverter, modifying the running frequency and related function code parameters, and monitoring the working state and fault information of the Inverter) through PC/PLC, upper control computer, or other devices to meet specific application requirements.

9.2 Modbus protocol introduction

Modbus is a software protocol, a common language used in electronic controllers. By using this protocol, a controller can communicate with other devices through transmission lines. It is a general industrial standard. With this standard, control devices produced by different manufacturers can be connected to form an industrial network and be monitored in a centralized way.

The Modbus protocol provides two transmission modes, namely American Standard Code for Information Interchange (ASCII) and remote terminal units (RTU). On one Modbus network, all the device transmission modes, baud rates, data bits, check bits, end bits, and other basic parameters must be set consistently.

A Modbus network is a control network with one master and multiple slaves, that is, on one Modbus network, there is only one device serving as the master, and other devices are the slaves. The master can communicate with one slave or broadcast messages to all the slaves. For separate access commands, a slave needs to return a response. For broadcasted information, slaves do not need to return responses.

9.3 Application of Modbus

S1 IP55 high-ingress protection series Inverters use the RTU mode provided by the Modbus protocol, and RS485 interfaces are used.

9.3.1 RS485

RS485 interfaces work in half-duplex mode and transmit data signals in the differential transmission way, which is also referred to as balanced transmission. An RS485 interface uses a twisted pair, where one wire is defined as A (+), and the other B (-). Generally, if the positive electrical level between the transmission drives A and B ranges from +2 V to +6 V, the logic is "1"; and if it ranges from -2 V to -6 V, the logic is "0".

The 485+ terminal on the terminal block of the Inverter corresponds to A, and 485- corresponds to B.

The communication baud rate (P14.01) indicates the number of bits transmitted in a second, and the unit is bit/s (bps). A higher baud rate indicates faster transmission and poorer anti-interference capability. When a twisted pair of 0.56 mm (24 AWG) is used, the maximum transmission distance varies according to the baud rate, as described in the following table.

Baud rate (bps)	Max. transmission distance	Baud rate (bps)	Max. transmission distance
2400	1800 m	9600	800 m
4800	1200 m	19200	600 m

When RS485 interfaces are used for long-distance communication, it is recommended that you use shielded cables, and use the shield layer as the ground wires.

When there are fewer devices and the transmission distance is short, the whole network works well without terminal load resistors. The performance, however, degrades as the distance increases. Therefore, it is recommended that you use a 120 Ω terminal resistor when the transmission distance is long.

9.3.1.1 Application to one Inverter

Figure 9-1 is the Modbus wiring diagram of one Inverter and a PC. Generally, PCs do not provide RS485 interfaces, so you need to convert an RS232 interface or USB port of a PC to an RS485 interface. Connect end A of the RS485 interface to the 485+ port on the terminal block of the Inverter, and connect end B to the 485- port. It is recommended that you use shielded twisted pairs. When an RS232-RS485 converter is used, the cable used to connect the RS232 interface of the PC and the converter cannot be longer than 15 m. Use a short cable when possible. It is recommended that you insert the converter directly into the PC. Similarly, when a USB-RS485 converter is used, use a short cable when possible.

Figure 9-1 Wiring of RS485 applied to one Inverter

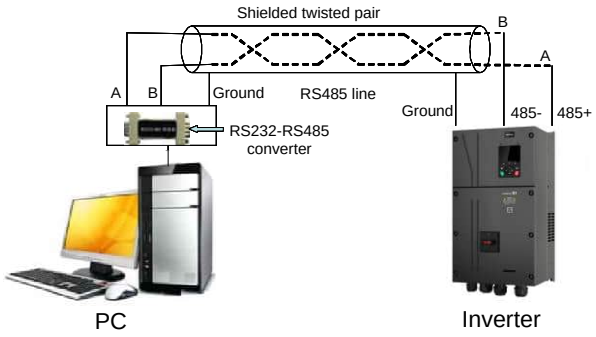

9.3.1.2 Application to multiple Inverters

In practical application to multiple Inverters, chrysanthemum connection and star connection are commonly used.

According to the requirements of the RS485 industrial bus standards, all the devices need to be connected in chrysanthemum mode with one 120 Ω terminal resistor on each end, as shown in Figure 9-2.

Figure 9-3 is the simplified wiring diagram, and Figure 9-4 is the practical application diagram.

Figure 9-2 On-site chrysanthemum connection diagram

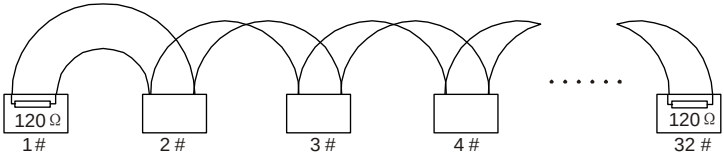

Figure 9-3 Simplified chrysanthemum connection diagram

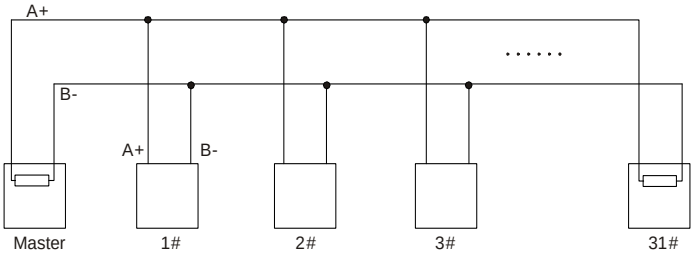

Figure 9-4 Practical application diagram of chrysanthemum connection

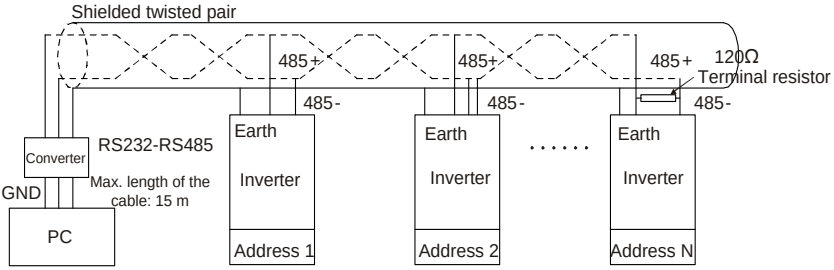

Figure 9-5 shows the start connection diagram. When this connection mode is adopted, the two devices that are farthest away from each other on the line must be connected with a terminal resistor (in Figure 9-5, the two devices are devices 1# and 15#).

Figure 9-5 Star connection

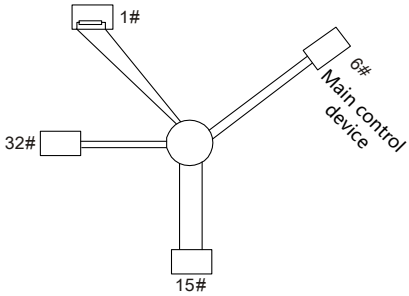

Use shielded cable, if possible, in multi-device connection. The baud rates, data bit check settings, and other basic parameters of all the devices on the RS485 line must be set consistently, and addresses cannot be repeated.

9.3.2 RTU mode

9.3.2.1 RTU communication frame structure

When a controller is set to use the RTU communication mode on a Modbus network, every byte (8 bits) in the message includes 2 hexadecimal characters (each includes 4 bits). Compared with the ASCII mode, the RTU mode can transmit more data with the same baud rate.

Code system

- 1 start bit
- 7 or 8 data bits; the minimum valid bit is transmitted first. Each frame domain of 8 bits includes 2 hexadecimal characters (0–9, A–F).
- 1 odd/even check bit; this bit is not provided if no check is needed.
- 1 end bit (with check performed), 2 bits (without check)

Error detection domain

- Cyclic redundancy check (CRC)

The following table describes the data format.

11-bit character frame (Bits 1 to 8 are data bits)

Start bit	BIT1	BIT2	BIT3	BIT4	BIT5	BIT6	BIT7	BIT8	Check bit	End bit

10-bit character frame (Bits 1 to 7 are data bits)

Start bit	BIT1	BIT2	BIT3	BIT4	BIT5	BIT6	BIT7	Check bit	End bit

In a character frame, only the data bits carry information. The start bit, check bit, and end bit are used to facilitate the transmission of the data bits to the destination device. In practical applications, you must set the data bits, parity check bits, and end bits consistently.

In RTU mode, the transmission of a new frame always starts from an idle time (the transmission time of 3.5 bytes). On a network where the transmission rate is calculated based on the baud rate, the transmission time of 3.5 bytes can be easily obtained. After the idle time ends, the data domains are transmitted in the following sequence: slave address, operation command code, data, and CRC check character. Each byte transmitted in each domain includes 2 hexadecimal characters (0–9, A–F). The network devices always monitor the communication bus. After receiving the first domain (address information), each network device identifies the byte. After the last byte is transmitted, a similar transmission interval (the transmission time of 3.5 bytes) is used to indicate that the transmission of the frame ends. Then, the transmission of a new frame starts.

RTU data frame format

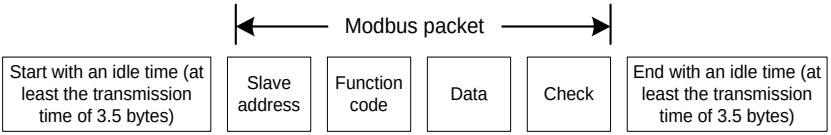

The information of a frame must be transmitted in a continuous data flow. If there is an interval greater than the transmission time of 1.5 bytes before the transmission of the entire frame is complete, the receiving device deletes the incomplete information, and mistakes the subsequent byte for the address domain of a new frame. Similarly, if the transmission interval between two frames is shorter than the transmission time of 3.5 bytes, the receiving device mistakes it for the data of the last frame. The CRC check value is incorrect due to the disorder of the frames, and thus a communication fault occurs.

The following table describes the standard structure of an RTU frame.

START (frame header)	T1-T2-T3-T4 (transmission time of 3.5 bytes)
ADDR (slave address domain)	Communication address: 0–247 (decimal system) (0 is the broadcast address)
CMD (function domain)	03H: read slave parameters 06H: write slave parameters
DATA (N-1) ... DATA (0) (data domain)	Data of 2×N bytes, main content of the communication as well as the core of data exchanging
CRC CHK (LSBs)	Detection value: CRC (16 bits)
CRC CHK high bit (MSBs)	
END (frame tail)	T1-T2-T3-T4 (transmission time of 3.5 bytes)

9.3.2.2 RTU communication frame error check modes

During the transmission of data, errors may occur due to various factors. Without check, the data receiving device cannot identify data errors and may make a wrong response. The wrong response may cause severe problems. Therefore, the data must be checked.

The check is implemented as follows: The transmitter calculates the to-be-transmitted data based on a specific algorithm to obtain a result, adds the result to the rear of the message, and transmits them together. After receiving the message, the receiver calculates the data based on the same algorithm to obtain a result, and compares the result with that transmitted by the transmitter. If the results are the same, the message is correct. Otherwise, the message is considered wrong.

The error check of a frame includes two parts, namely, bit check on individual bytes (that is, odd/even check using the check bit in the character frame), and whole data check (CRC check).

Bit check on individual bytes (odd/even check)

You can select the bit check mode as required, or you can choose not to perform the check, which will affect the check bit setting of each byte.

Definition of even check: Before the data is transmitted, an even check bit is added to indicate whether the number of "1" in the to-be-transmitted data is odd or even. If it is even, the check

bit is set to "0"; and if it is odd, the check bit is set to "1".

Definition of odd check: Before the data is transmitted, an odd check bit is added to indicate whether the number of "1" in the to-be-transmitted data is odd or even. If it is odd, the check bit is set to "0"; and if it is even, the check bit is set to "1".

For example, the data bits to be transmitted are "11001110", including five "1". If the even check is applied, the even check bit is set to "1"; and if the odd check is applied, the odd check bit is set to "0". During the transmission of the data, the odd/even check bit is calculated and placed in the check bit of the frame. The receiving device performs the odd/even check after receiving the data. If it finds that the odd/even parity of the data is inconsistent with the preset information, it determines that a communication error occurs.

CRC check mode

A frame in the RTU format includes an error detection domain based on the CRC calculation. The CRC domain checks all the content of the frame. The CRC domain consists of two bytes, including 16 binary bits. It is calculated by the transmitter and added to the frame. The receiver calculates the CRC of the received frame, and compares the result with the value in the received CRC domain. If the two CRC values are not equal to each other, errors occur in the transmission.

During CRC, 0xFFFF is stored first, and then a process is invoked to process a minimum of 6 contiguous bytes in the frame based on the content in the current register. CRC is valid only for the 8-bit data in each character. It is invalid for the start, end, and check bits.

During the generation of the CRC values, the "exclusive or" (XOR) operation is performed on the each 8-bit character and the content in the register. The result is placed in the bits from the least significant bit (LSB) to the most significant bit (MSB), and 0 is placed in the MSB. Then, LSB is detected. If LSB is 1, the XOR operation is performed on the current value in the register and the preset value. If LSB is 0, no operation is performed. This process is repeated 8 times. After the last bit (8th bit) is detected and processed, the XOR operation is performed on the next 8-bit byte and the current content in the register. The final values in the register are the CRC values obtained after operations are performed on all the bytes in the frame.

The calculation adopts the international standard CRC check rule. You can refer to the related standard CRC algorithm to compile the CRC calculation program as required.

The following is a simple CRC calculation function for your reference (using the C programming language):

```
unsigned int crc_cal_value(unsigned char×data_value,unsigned char
data_length)
{
    int i;
    unsigned int crc_value=0xffff;
    while(data_length--)
    {
            crc_value^=×data_value++;
            for(i=0;i<8;i++)
            {
                    if(crc_value&0x0001)
                            crc_value=(crc_value>>1)^0xa001;
                    else
                            crc_value=crc_value>>1;
```

```
                }
        }
        return(crc_value);
}
```

In the ladder logic, CKSM uses the table look-up method to calculate the CRC value according to the content in the frame. The program of this method is simple, and the calculation is fast, but the ROM space occupied is large. Use this program with caution in scenarios where there are space occupation limits on programs.

9.4 RTU command code and communication data

9.4.1 Command code: 03H, reading N words

Continuously reading a maximum of 16 words

The command code 03H is used by the master to read data from the Inverter. The quantity of data to be read depends on the "data quantity" in the command. A maximum of 16 pieces of data can be read. The addresses of the read parameters must be contiguous. Each piece of data occupies 2 bytes, that is, one word. The command format is presented using the hexadecimal system (a number followed by "H" indicates a hexadecimal value). One hexadecimal value occupies one byte.

The 03H command is used to read information including the parameters and operation state of the Inverter.

For example, starting from the data address of 0004H, to read two contiguous pieces of data (that is, to read content from the data addresses 0004H and 0005H), the structure of the frame is described in the following table.

RTU master command (transmitted by the master to the Inverter)

START	T1-T2-T3-T4 (transmission time of 3.5 bytes)
ADDR (address)	01H
CMD (command code)	03H
Most significant byte (MSB) of the start address	00H
Least significant byte (LSB) of the start address	04H
MSB of data quantity	00H
LSB of data quantity	02H
LSB of CRC	85H
MSB of CRC	CAH
END	T1-T2-T3-T4 (transmission time of 3.5 bytes)

The value in START and END is "T1-T2-T3-T4 (transmission time of 3.5 bytes)", indicating that the RS485 needs to stay idle for at least the transmission time of 3.5 bytes. An idle time is required to distinguish on message from another to ensure that the two messages are not regarded as one.

The value of ADDR is 01H, indicating that the command is transmitted to the Inverter whose address is 01H. The ADDR information occupies one byte.

The value of CMD is 03H, indicating that the command is used to read data from the Inverter. The CMD information occupies one byte.

"Start address" indicates that data reading is started from this address. It occupies two bytes, with the MSB on the left and LSB on the right.

"Data quantity" indicates the quantity of data to be read (unit: word).

The value of "Start address" is 0004H, and that of "Data quantity" is 0002H, indicating that data is to be read from the data addresses of 0004H and 0005H.

CRC check occupies two bytes, with the LSB on the left, and MSB on the right.

RTU slave response (transmitted by the Inverter to the master)

START	T1-T2-T3-T4 (transmission time of 3.5 bytes)
ADDR	01H
CMD	03H
Number of bytes	04H
MSB of data in 0004H	13H
LSB of data in 0004H	88H
MSB of data in 0005H	00H
LSB of data in 0005H	00H
LSB of CRC	7EH
MSB of CRC	9DH
END	T1-T2-T3-T4 (transmission time of 3.5 bytes)

The definition of the response information is described as follows:

The value of ADDR is 01H, indicating that the message is transmitted by the Inverter whose address is 01H. The ADDR information occupies one byte.

The value of CMD is 03H, indicating that the message is a response of the Inverter to the 03H command of the master for reading data. The CMD information occupies one byte.

"Number of bytes" indicates the number of bytes between a byte (not included) and the CRC byte (not included). The value 04 indicates that there are four bytes of data between "Number of bytes" and "LSB of CRC", that is, "MSB of data in 0004H", "LSB of data in 0004H", "MSB of data in 0005H", and "LSB of data in 0005H".

A piece of data is two bytes, with the MSB on the left and LSB on the right. From the response, we can see that the data in 0004H is 1388H, and that in 0005H is 0000H.

CRC check occupies two bytes, with the LSB on the left, and MSB on the right.

9.4.2 Command code: 06H, writing a word

This command is used by the master to write data to the Inverter. One command can be used to write only one piece of data. It is used to modify the parameters and operation mode of the Inverter.

For example, to write 5000 (1388H) to 0004H of the Inverter whose address is 02H, the structure of the frame is described in the following table.

RTU master command (transmitted by the master to the Inverter)

START	T1-T2-T3-T4 (transmission time of 3.5 bytes)
ADDR	02H
CMD	06H
MSB of data writing address	00H

LSB of data writing address	04H
MSB of to-be-written data	13H
LSB of to-be-written data	88H
LSB of CRC	C5H
MSB of CRC	6EH
END	T1-T2-T3-T4 (transmission time of 3.5 bytes)

RTU slave response (transmitted by the Inverter to the master)

START	T1-T2-T3-T4 (transmission time of 3.5 bytes)
ADDR	02H
CMD	06H
MSB of data writing address	00H
LSB of data writing address	04H
MSB of to-be-written data	13H
LSB of to-be-written data	88H
LSB of CRC	C5H
MSB of CRC	6EH
END	T1-T2-T3-T4 (transmission time of 3.5 bytes)

Note: The sections 9.4.1 and 9.4.2 mainly describe the command formats. For the detailed application, see the examples in section 9.4.8 "Read/Write operation example".

9.4.3 Command code: 08H, diagnosis

Sub-function code description

Sub-function code	Description
0000	Return data based on query requests

For example, to query about the circuit detection information about the Inverter whose address is 01H, the query and return strings are the same, and the format is described in the following tables.

RTU master command

START	T1-T2-T3-T4 (transmission time of 3.5 bytes)
ADDR	01H
CMD	08H
MSB of the sub-function code	00H
LSB of the sub-function code	00H
MSB of data	12H
LSB of data	ABH
LSB of CRC CHK	ADH
MSB of CRC CHK	14H
END	T1-T2-T3-T4 (transmission time of 3.5 bytes)

RTU slave response

START	T1-T2-T3-T4 (transmission time of 3.5 bytes)
ADDR	01H
CMD	08H

MSB of the sub-function code	00H
LSB of the sub-function code	00H
MSB of data	12H
LSB of data	ABH
LSB of CRC CHK	ADH
MSB of CRC CHK	14H
END	T1-T2-T3-T4 (transmission time of 3.5 bytes)

9.4.4 Command code: 10H, continuous writing

The command code 10H is used by the master to write data to the Inverter. The quantity of data to be written is determined by "Data quantity", and a maximum of 16 pieces of data can be written.

For example, to write 5000 (1388H) and 50 (0032H) respectively to 0004H and 0005H of the Inverter whose slave address is 02H, the structure of the frame is described in the following table.

RTU master command (transmitted by the master to the Inverter)

START	T1-T2-T3-T4 (transmission time of 3.5 bytes)
ADDR	02H
CMD	10H
MSB of data writing address	00H
LSB of data writing address	04H
MSB of data quantity	00H
LSB of data quantity	02H
Number of bytes	04H
MSB of data to be written to 0004H	13H
LSB of data to be written to 0004H	88H
MSB of data to be written to 0005H	00H
LSB of data to be written to 0005H	32H
LSB of CRC	C5H
MSB of CRC	6EH
END	T1-T2-T3-T4 (transmission time of 3.5 bytes)

RTU slave response (transmitted by the Inverter to the master)

START	T1-T2-T3-T4 (transmission time of 3.5 bytes)
ADDR	02H
CMD	10H
MSB of data writing address	00H
LSB of data writing address	04H
MSB of data quantity	00H
LSB of data quantity	02H
LSB of CRC	C5H
MSB of CRC	6EH
END	T1-T2-T3-T4 (transmission time of 3.5 bytes)

9.4.5 Data address definition

This section describes the address definition of communication data. The addresses are used for controlling the running, obtaining the state information, and setting related function parameters of the Inverter.

9.4.5.1 Function code address representation rules

The address of a function code consists of two bytes, with the MSB on the left and LSB on the right. The MSB ranges from 00 to ffH, and the LSB also ranges from 00 to ffH. The MSB is the hexadecimal form of the group number before the dot mark, and LSB is that of the number behind the dot mark. Take P05.06 as an example, the group number is 05, that is, the MSB of the parameter address is the hexadecimal form of 05; and the number behind the dot mark is 06, that is, the LSB is the hexadecimal form of 06. Therefore, the function code address is 0506H in the hexadecimal form. For P10.01, the parameter address is 0A01H.

Function code	Name	Description	Setting range	Default value	Modify
P10.00	Simple PLC mode	0: Stop after running once 1: Keep running in the final value after running once 2: Cyclic running	0-2	0	○
P10.01	Simple PLC memory selection	0: No memory after power down 1: Memory after power down	0-1	0	○

Note:

1. The parameters in the P99 group are set by the manufacturer. They cannot be read or modified. Some parameters cannot be modified when the Inverter is running; some cannot be modified regardless of the state of the Inverter. Pay attention to the setting range, unit, and related description of a parameter when modifying it.
2. The service life of the Electrically Erasable Programmable Read-Only Memory (EEPROM) may be reduced if it is frequently used for storage. For users, some function codes do not need to be stored during communication. The application requirements can be met by modifying the value of the on-chip RAM, that is, modifying the MSB of the corresponding function code address from 0 to 1. For example, if P00.07 is not to be stored in the EEPROM, you need only to modify the value of the RAM, that is, set the address to 8007H. The address can be used only for writing data to the on-chip RAM, and it is invalid when used for reading data.

9.4.5.2 Description of other function code addresses

In addition to modifying the parameters of the Inverter, the master can also control the Inverter, such as start and stop it, and monitor the operation state of the Inverter. The following table describes other function parameters.

Function	Address	Data description	R/W
Communication-based control command	2000H	0001H: Forward running	R/W
		0002H: Reverse running	
		0003H: Forward jogging	
		0004H: Reverse jogging	
		0005H: Stop	
		0006H: Coast to stop	
		0007H: Fault reset	
		0008H: Jogging to stop	
Communication-based value setting	2001H	Communication-based frequency setting (0–Fmax, unit: 0.01 Hz)	R/W

Function	Address	Data description	R/W
	2002H	PID setting, range (0–1000, 1000 corresponding to 100.0%)	
	2003H	PID feedback, range (0–1000, 1000 corresponding to 100.0%)	R/W
	2004H	Torque setting (-3000–+3000, 1000 corresponding to 100.0% of the rated current of the motor)	R/W
	2005H	Setting of the upper limit of the forward running frequency (0–Fmax, unit: 0.01 Hz)	R/W
	2006H	Setting of the upper limit of the reverse running frequency (0–Fmax, unit: 0.01 Hz)	R/W
	2007H	Upper limit of the electromotion torque (0–3000, 1000 corresponding to 100.0% of the rated current of the Inverter)	R/W
	2008H	Upper limit of the brake torque (0–3000, 1000 corresponding to 100.0% of the rated current of the motor)	R/W
	2009H	Special control command word: Bit1–0: =00: Motor 1 =01: Motor 2 =10: Motor 3 =11: Motor 4 Bit2: =1 Torque control disabled =0: Torque control cannot be disabled Bit3: =1 Power consumption reset to 0 =0: Power consumption not reset Bit4: =1 Pre-excitation =0: Pre-excitation disabled Bit5: =1 DC brake =0: DC brake disabled	R/W
	200AH	Virtual input terminal command, range: 0x000–0x3FF Corresponding to S8/S7/S6/S5/HDIB/HDIA/S4/S3/ S2/S1	R/W
	200BH	Virtual output terminal command, range: 0x00–0x0F Corresponding to local RO2/RO1/HDO/Y1	R/W
	200CH	Voltage setting (used when V/F separation is implemented) (0–1000, 1000 corresponding to 100.0% of the rated voltage of the motor)	R/W
	200DH	AO output setting 1 (-1000–+1000, 1000 corresponding to 100.0%)	R/W
	200EH	AO output setting 2 (-1000–+1000, 1000 corresponding to 100.0%)	R/W
Inverter state word 1	2100H	0001H: Forward running	R
		0002H: Reverse running	
		0003H: Stopped	
		0004H: Faulty	
		0005H: POFF	
		0006H: Pre-excited	

Function	Address	Data description		R/W
Inverter state word 2	2101H	Bit0: =0: Not ready to run =1: Ready to run Bi2–1: =00: Motor 1 =01: Motor 2 =10: Motor 3 =11: Motor 4 Bit3: =0: Asynchronous machine =1: Synchronous machine Bit4: =0: No overload alarm =1: Overload alarm Bit6–Bit5: =00: Keypad-based control =01: Terminal-based control =10: Communication-based control Bit7: reserved Bit8: =0: speed control =1: torque control Bit9: =0: not for position control =1: position control Bit11–10: =0:vector 0 =1: vector 1 =2: Closed-loop vector =3: V/F		R
Inverter fault code	2102H	See the description of fault types.		R
Inverter identification code	2103H	S1-----0x01A0		R
Running frequency	3000H	0–Fmax (unit: 0.01Hz)	Compatible with CHF100A and CHV100 communication addresses	R
Set frequency	3001H	0–Fmax (unit: 0.01Hz)		R
Bus voltage	3002H	0.0–2000.0 V (unit: 0.1V)		R
Output voltage	3003H	0–1200V (unit: 1V)		R
Output current	3004H	0.0–3000.0A (unit: 0.1A)		R
Rotating speed	3005H	0–65535 (unit: 1rpm)		R
Ouptut power	3006H	-300.0–+300.0% (unit: 0.1%)		R
Output torque	3007H	-250.0–+250.0% (unit: 0.1%)		R
Closed-loop setting	3008H	-100.0–+100.0% (unit: 0.1%)		R
Closed-loop feedback	3009H	-100.0–+100.0% (unit: 0.1%)		R
Input state	300AH	0x00–0x3F Corresponding to the local HDIB/ HDIA/S4/S3/S2/S1		R
Output state	300BH	0x00–0x0F Corresponding to the local RO2/RO1/HDO/Y1		R
Analog input 1	300CH	0.00–10.00V (unit: 0.01V)		R
Analog input 2	300DH	0.00–10.00V (unit: 0.01V)		R
Analog input 3	300EH	-10.00–10.00V (unit: 0.01V)		R
Analog input 4	300FH	/		R
Read input of high-speed pulse 1	3010H	0.000–50.000kHz (unit: 0.001Hz)		R
Read input of high-speed pulse 2	3011H	/		R
Read current step of multi-step speed	3012H	0–15		R
External length	3013H	0–65535		R
External count value	3014H	0–65535		R
Torque setting	3015H	-300.0–+300.0% (unit: 0.1%)		R

Function	Address	Data description		R/W
Identification code	3016H	/		R
Fault code	5000H	/		R

The Read/Write (R/W) characteristics indicate whether a function can be read and written. For example, "Communication-based control command" can be written, and therefore the command code 6H is used to control the Inverter. The R characteristic indicates that a function can only be read, and W indicates that a function can only be written.

Note: Some parameters in the preceding table are valid only after they are enabled. Take the running and stop operations as examples, you need to set "Running command channel" (P00.01) to "Communication", and set "Communication running command channel" (P00.02) to the Modbus/Modbus TCP communication channel. For another example, when modifying "PID setting", you need to set "PID reference source" (P09.00) to Modbus communication.

9.4.6 Fieldbus scale

In practical applications, communication data is represented in the hexadecimal form, but hexadecimal values cannot represent decimals. For example, 50.12 Hz cannot be represented in the hexadecimal form. In such cases, we can multiply 50.12 by 100 to obtain an integer 5012, and then 50.12 can be represented as 1394H (5012 in the decimal form) in the hexadecimal form.

In the process of multiplying a non-integer by a multiple to obtain an integer, the multiple is referred to as a fieldbus scale.

The fieldbus scale depends on the number of decimals in the value specified in "Description" or "Default value". If there are *n* decimals in the value, the fieldbus scale m is the power n of 10. Take the following table as an example, m is 10.

Function code	Name	Description	Default value
P01.20	Wake-up-from-sleep delay	0.0–3600.0s (valid when the ones place of P01.19 is 2)	0.0s
P01.21	Restart after power down	0: Restart is disabled 1: Restart is enabled	0

The value specified in "Description" or "Default value" contains one decimal, so the fieldbus scale is 10. If the value received by the upper computer is 50, the value of "Wake-up-from-sleep delay" of the Inverter is 5.0 (5.0=50/10).

To set the "Wake-up-from-sleep delay" to 5.0s through Modbus communication, you need first to multiply 5.0 by 10 according to the scale to obtain an integer 50, that is, 32H in the hexadecimal form, and then transmit the following write command:

01	06	01 14	00 32	49 E7
Inverter address	Write command	Parameter address	Parameter data	CRC

After receiving the command, the Inverter converts 50 into 5.0 based on the fieldbus scale, and then sets "Wake-up-from-sleep delay" to 5.0s.

For another example, after the upper computer transmits the "Wake-up-from-sleep delay" parameter read command, the master receives the following response from the Inverter:

01	03	02	00 32	39 91
Inverter address	Read command	2-byte data	Parameter data	CRC

The parameter data is 0032H, that is, 50, so 5.0 is obtained based on the fieldbus scale (50/10=5.0). In this case, the master identifies that the "Wake-up-from-sleep delay" is 5.0s.

9.4.7 Error message response

Operation errors may occur in communication-based control. For example, some parameters can only be read, but a write command is transmitted. In this case, the Inverter returns an error message response.

Error message responses are transmitted by the Inverter to the master. The following table describes the codes and definitions of the error message responses.

Code	Name	Definition
01H	Invalid command	The command code received by the upper computer is not allowed to be executed. The possible causes are as follows: ● The function code is applicable only on new devices and is not implemented on this device. ● The slave is in the faulty state when processing this request.
02H	Invalid data address	For the Inverter, the data address in the request of the upper computer is not allowed. In particular, the combination of the register address and the number of the to-be-transmitted bytes is invalid.
03H	Invalid data bit	The received data domain contains a value that is not allowed. The value indicates the error of the remaining structure in the combined request. **Note:** It does not mean that the data item submitted for storage in the register includes a value unexpected by the program.
04H	Operation failure	The parameter is set to an invalid value in the write operation. For example, a function input terminal cannot be set repeatedly.
05H	Password error	The password entered in the password verification address is different from that set in P07.00.
06H	Data frame error	The length of the data frame transmitted by the upper computer is incorrect, or in the RTU format, the value of the CRC check bit is inconsistent with the CRC value calculated by the lower computer
07H	Parameter read-only	The parameter to be modified in the write operation of the upper computer is a read-only parameter.
08H	Parameter cannot be modified in running	The parameter to be modified in the write operation of the upper computer cannot be modified during the running of the Inverter.
09H	Password protection	A user password is set, and the upper computer does not provide the password to unlock the system when performing a read or write operation. The error of "system locked" is reported.

When returning a response, the device uses a function code domain and fault address to indicate whether it is a normal response (no error) or exception response (some errors occur). In a normal response, the device returns the corresponding function code and data address or sub-function code. In an exception response, the device returns a code that is equal to a normal code, but the first bit is logic 1.

For example, if the master device transmits a request message to a slave device for reading a group of function code address data, the code is generated as follows:

0 0 0 0 0 0 1 1 (03H in the hexadecimal form)

For a normal response, the same code is returned.

For an exception response, the following code is returned:

1 0 0 0 0 0 1 1 (83H in the hexadecimal form)

In addition to the modification of the code, the slave returns a byte of exception code that describes the cause of the exception. After receiving the exception response, the typical processing of the master device is to transmit the request message again or modify the command based on the fault information.

For example, to set the "Running command channel" (P00.01, the parameter address is 0001H) of the Inverter whose address is 01H to 03, the command is as follows:

01	06	00 01	00 03	98 0B
Inverter address	Write command	Parameter address	Parameter data	CRC

But the setting range of the "Running command channel" is 0 to 2. The value 3 exceeds the setting range. In this case, the Inverter returns an error message response as shown in the following:

01	86	04	43 A3
Inverter address	Exception response code	Error code	CRC

The exception response code 86H (generated based on the MSB "1" of the write command 06H) indicates that it is an exception response to the write command (06H). The error code is 04H. From the preceding table, we can see that it indicates the error "Operation failure", which means "The parameter is set to an invalid value in the write operation".

9.4.8 Read/Write operation example

For the formats of the read and write commands, see sections 9.4.1 and 9.4.2.

9.4.8.1 Read command 03H examples

Example 1: Read state word 1 of the Inverter whose address is 01H. From the table of other function parameters, we can see that the parameter address of state word 1 of the Inverter is 2100H.

The read command transmitted to the Inverter is as follows:

01	03	21 00	00 01	8E 36
Inverter address	Read command	Parameter address	Data quantity	CRC

Assume that the following response is returned:

01	03	02	00 03	F8 45
Inverter address	Read command	Number of bytes	Data content	CRC

The data content returned by the Inverter is 0003H, which indicates that the Inverter is in the stopped state.

Example 2: View information about the Inverter whose address is 03H, including "Type of current fault" (P07.27) to "Type of last but four fault" (P07.32) of which the parameter addresses are 071BH to 0720H (contiguous 6 parameter addresses starting from 071BH).

The command transmitted to the Inverter is as follows:

03	03	07 1B	00 06	B5 59
Inverter address	Read command	Start address	6 parameters in total	CRC

Assume that the following response is returned:

03	03	0C	00 23	00 23	00 23	00 23	00 23	00 23	5F D2
Inverter address	Read command	Number of bytes	Type of current fault	Type of last fault	Type of last but one fault	Type of last but two fault	Type of last but three fault	Type of last but four fault	CRC

From the returned data, we can see that all the fault types are 0023H, that is, 35 in the decimal form, which means the maladjustment fault (STo)

9.4.8.2 Write command 06H examples

Example 1: Set the Inverter whose address is 03H to be forward running. Refer to the table of other function parameters, the address of "Communication-based control command" is 2000H, and 0001H indicates forward running.

Function	Address	Data description	R/W
Communication-based control command	2000H	0001H: Forward running	R/W
		0002H: Reverse running	
		0003H: Forward jogging	
		0004H: Reverse jogging	
		0005H: Stop	
		0006H: Coast to stop	
		0007H: Fault reset	
		0008H: Jogging to stop	

The command transmitted by the master is as follows:

03	06	20 00	00 01	42 28
Inverter address	Write command	Parameter address	Forward running	CRC

If the operation is successful, the following response is returned (same as the command transmitted by the master):

03	06	20 00	00 01	42 28
Inverter address	Write command	Parameter address	Forward running	CRC

Example 2: Set the "Max. output frequency" of the Inverter whose address is 03H to 100 Hz.

Function code	Name	Description	Default value	Modify
P00.03	Max. output frequency	Used to set the max. output frequency of the Inverter. It is the basis of frequency setup and the acceleration/deceleration. Setting range: Max (P00.04, 10.00) –590.00Hz	50.00Hz	◎

From the number of decimals, we can see that the fieldbus scale of the "Max. output frequency" (P00.03) is 100. Multiply 100 Hz by 100. The value 10000 is obtained, and it is 2710H in the hexadecimal form.

The command transmitted by the master is as follows:

03	06	00 03	27 10	62 14
Inverter address	Write command	Parameter address	Parameter data	CRC

If the operation is successful, the following response is returned (same as the command transmitted by the master):

03	06	00 03	27 10	62 14
Inverter address	Write command	Parameter address	Parameter data	CRC

Note: In the preceding command description, spaces are added to a command just for explanatory purposes. In practical applications, no space is required in the commands.

9.4.8.3 Continuously write command 10H examples

Example 1: Set the Inverter whose address is 01H to be forward running at the frequency of 10 Hz. Refer to the table of other function parameters, the address of "Communication-based control command" is 2000H, 0001H indicates forward running, and the address of "Communication-based value setting" is 2001H, as shown in the following figure. 10 Hz is 03E8H in the hexadecimal form.

Function	Address	Data description	R/W
Communication-based control command	2000H	0001H: Forward running	R/W
		0002H: Reverse running	
		0003H: Forward jogging	
		0004H: Reverse jogging	
		0005H: Stop	
		0006H: Coast to stop	

Function	Address	Data description	R/W
		0007H: Fault reset	
		0008H: Jogging to stop	
Communication-based value setting	2001H	Communication-based frequency setting (0–Fmax, unit: 0.01 Hz)	R/W
	2002H	PID setting, range (0–1000, 1000 corresponding to 100.0%)	

In the actual operation, set P00.01 to 2 and P00.06 to 8.

The command transmitted by the master is as follows:

01	10	20 00	00 02	04	00 01	03 E8	3B 10
Inverter address	Continuous write command	Parameter address	Parameter quantity	Number of bytes	Froward running	10 Hz	CRC

If the operation is successful, the following response is returned:

01	10	20 00	00 02	4A 08
Inverter address	Continuous write command	Parameter address	Parameter quantity	CRC

Example 2: Set "Acceleration time" of the Inverter whose address is 01H to 10s, and "Deceleration time" to 20s.

Function code	Name	Description	Default value	Modify
P00.11	Acceleration time 1	Setting range of P00.11 and P00.12: 0.0–3600.0s	Depend on model	○
P00.12	Deceleration time 1		Depend on model	○

The address of P00.11 is 000B, 10s is 0064H in the hexadecimal form, and 20s is 00C8H in the hexadecimal form.

The command transmitted by the master is as follows:

01	10	00 0B	00 02	04	00 64	00 C8	F2 55
Inverter address	Continuous write command	Parameter address	Parameter quantity	Number of bytes	10s	20s	CRC

If the operation is successful, the following response is returned:

01	10	00 0B	00 02	30 0A
Inverter address	Continuous write command	Parameter address	Parameter quantity	CRC

Note: In the preceding command description, spaces are added to a command just for explanatory purposes. In practical applications, no space is required in the commands.

9.4.8.4 Modbus communication commissioning example

A PC is used as the host, an RS232-RS485 converter is used for signal conversion, and the PC serial port used by the converter is COM1 (an RS232 port). The upper computer commissioning software is the serial port commissioning assistant Commix, which can be downloaded from the Internet. Download a version that can automatically execute the CRC check function. The following figure shows the interface of Commix.

First, set the serial port to **COM1**. Then, set the baud rate consistently with P14.01. The data bits, check bits, and end bits must be set consistently with P14.02. If the RTU mode is selected, you need to select the hexadecimal form **Input HEX**. To set the software to automatically execute the CRC function, you need to select **ModbusRTU**, select **CRC16 (MODBU SRTU)**, and set the start byte to **1**. After the auto CRC check function is enabled, do not enter CRC information in commands. Otherwise, command errors may occur due to repeated CRC check.

The commissioning command to set the Inverter whose address is 03H to be forward running is as follows:

03	06	20 00	00 01	42 28
Inverter address	Write command	Parameter address	Forward running	CRC

Note:

1. Set the address (P14.00) of the Inverter to 03.
2. Set "Channel of running commands" (P00.01) to "Communication", and set "Communication channel of running commands" (P00.02) to the Modbus/Modbus TCP communication channel.
3. Click **Send**. If the line configuration and settings are correct, a response transmitted by the Inverter is received as follows:

03	06	20 00	00 01	42 28
Inverter address	Write command	Parameter address	Forward running	CRC

9.5 Common communication faults

Common communication faults include the following:

1. No response is returned.
2. The Inverter returns an exception response.

Possible causes of no response include the following:

1. The serial port is set incorrectly. For example, the converter uses the serial port COM1, but COM2 is selected for the communication.
2. The settings of the baud rates, data bits, end bits, and check bits are inconsistent with those set on the Inverter.
3. The positive pole (+) and negative pole (-) of the RS485 bus are connected reversely.
4. The resistor connected to 485 terminals on the terminal block of the Inverter is set incorrectly.

Appendix A Expansion cards

A.1 Model definition

EC-PG 5 01-05 B

① ② ③ ④ ⑤ ⑥

Field identifier	Field description	Naming example
①	Product category	EC: Expansion card
②	Card category	IC: IoT card IO: IO card PC: Programmable card PG: PG card PS: Power supply card TX: Communication card
③	Technical version	Indicates the generation of technical version by using an odd number. For example, 1, 3, 5, and 7 indicate the 1st, 2nd, 3rd and 4th generations of technical version.
④	Distinguishing code	01: Incremental PG card + frequency-divide output
		02: Sine/Cosine PG card + pulse direction setting + frequency-divide output
		03: UVW PG interface + pulse direction setting + frequency-divide output
		04: Resolver PG interface + pulse direction setting + frequency-divide output
		05: Incremental PG card + pulse direction setting + frequency-divide output
		06: Absolute PG interface + pulse direction setting + frequency-divide output
		07: Simple incremental PG card
⑤	Working power	00: Passive
		05: 5V
		12: 12–15 V
		24: 24 V
⑥	Expansion card version	Empty: Version A B: Version B C: Version C

EC-PC 5 02-00

① ② ③ ④ ⑤

Field identifier	Field description	Naming example
①	Product category	EC: Expansion card

Field identifier	Field description	Naming example
②	Card category	IC: IoT card IO: IO card PC: Programmable card PG: PG card PS: Power supply card TX: Communication card
③	Technical version	Indicates the generation of technical version by using an odd number. For example, 1, 3, 5, and 7 indicate the 1st, 2nd, 3rd and 4th generations of technical version.
④	Distinguishing code	01: 10 points, with 6 inputs and 4 outputs (2 transistor outputs + 2 relay outputs)
		02: 8 points of IO, 1 point of AI, 1 point of AO, and 1 point of RS485 communication
		03: Reserved
⑤	Special requirement	Reserved. The default value is 00.

EC-TX 5 01 B

① ② ③ ④ ⑤

Field identifier	Field description	Naming example
①	Product category	EC: Expansion card
②	Card category	IC: IoT card IO: IO card PC: Programmable card PG: PG card PS: Power supply card TX: Communication card
③	Technical version	Indicates the generation of a technical version by using odd numbers, for example, 1, 3, and 5 indicate the 1st, 2nd, and 3rd generations of the technical version.
④	Distinguishing code	01: Bluetooth communication card
		02: WIFI communication card
		03: PROFIBUS communication card
		05: CAN multi-protocol communication card
		06: DeviceNet communication card
		07: BACnet communication card
		08: EtherCAT communication card
		09: PROFINET communication card
		10: Ethernet/IP communication card
		15: Modbus TCP communication card
⑤	Expansion card version	Empty: Version A B: Version B C: Version C

EC-IO 5 01-00

① ② ③ ④ ⑤

Field identifier	Field description	Naming example
①	Product category	EC: Expansion card
②	Card category	IC: IoT card IO: IO card PC: Programmable card PG: PG card PS: Power supply card TX: Communication card
③	Technical version	Indicates the generation of technical version by using an odd number. For example, 1, 3, 5, and 7 indicate the 1st, 2nd, 3rd and 4th generations of technical version.
④	Distinguishing code	01: Multiple-function I/O expansion card (4 digital inputs, 1 digital output, 1 analog input, 1 analog output, and 2 relay outputs)
		02: Digital I/O card
		03: Analog I/O card
		04: Reserved 1
		05: Reserved 2
⑤	Special requirement	

EC - IC 5 01 - 2 1 G

① ② ③ ④ ⑤ ⑥ ⑦

Field identifier	Field description	Naming example
①	Product category	EC: Expansion card
②	Card category	IC: IoT card IO: IO card PC: Programmable card PG: PG card PS: Power supply card TX: Communication card
③	Technical version	Indicates the generation of technical version by using an odd number. For example, 1, 3, 5, and 7 indicate the 1st, 2nd, 3rd and 4th generations of technical version.
④	Distinguishing code	01: GPRS card 02: 4G card 03: Reserved
⑤	Antenna type	1: Internal 2: External

Field identifier	Field description	Naming example
⑥	SIM card type	0: Plug-in (standard) 1: Surface mounted **Note:** When this field is 0 or omitted, the SIM card type is plug-in.
⑦	Special requirement	G: With GPS S: Surface mounted SIM card **Note:** When this field is omitted, the expansion card does not have special functions.

EC – IC 5 02 - 2 1 G - CN

① ② ③ ④ ⑤ ⑥ ⑦ ⑧

Field	Field description	Naming example
①	Product category	EC: Expansion card
②	Card category	IC: IoT card IO: IO card PC: Programmable card PG: PG card PS: Power supply card TX: Communication card
③	Technical version	Indicates the generation of technical version by using an odd number. For example, 1, 3, 5, and 7 indicate the 1st, 2nd, 3rd and 4th generations of technical version.
④	Distinguishing code	01: GPRS card
		02: 4G card
		03: Reserved
⑤	Antenna type	1: Built-in
		2: External
⑥	SIM card type	0: Plug-in 1: Surface mounted **Note:** When this filed is 0 or omitted, the SIM card type is plug-in.
⑦	Special function	G: GPS function **Note:** When this field is omitted, the expansion card does not have special functions
⑧	International version	CN: China version EU: Europe version LA: Latin America version **Note:** A 4G SIM card is a standard configuration for the CN version, but not for the EU or LA version.

The following table describes expansion cards that S1 IP55 high-ingress protection series Inverters support. The expansion cards are optional and need to be purchased separately

Name	Model	Specification
IO expansion card 1	EC-IO501-00	● 4 digital inputs ● 1 digital output ● 1 analog input ● 1 analog output ● 2 relay outputs: 1 double-contact output, and 1 single-contact output
IO expansion card 2	EC-IO502-00	● 4 digital inputs ● 1 PT100 ● 1 PT1000 ● 2 relay outputs: single-contact output
Programmable expansion card	EC-PC502-00	● Adopting the global mainstream development environment PLC, supporting multiple types of programming languages, such as the instruction language, structural text, function block diagram, ladder diagram, continuous function chart, and sequential function chart ● Supporting breakpoint commissioning and periodic task run mode selection ● Providing user program storage space of 16K steps, and data storage space of 8K words ● 6 digital inputs ● 2 relay outputs ● 1 AI and 1 AO ● 1 RS485 communication channel, supporting the host controller to switch the master/slave ● Saving data of 1K words at power down
Bluetooth communication card	EC-TX501-1 EC-TX501-2	● Supporting Bluetooth 4.0 ● With HITACHI's mobile phone APP, you can set the parameters and monitor the states of the Inverter through Bluetooth ● The maximum communication distance in open environments is 30 m. ● EC-TX501-1 is equipped with a built-in antenna and applicable to molded case machines. ● EC-TX501-2 is configured with an external sucker antenna and applicable to sheet metal machines.
WIFI communication card	EC-TX502-1 EC-TX502-2	● Meeting IEEE802.11b/g/n ● With HITACHI's mobile phone APP, you can monitor the Inverter locally or remotely through WIFI communication ● The maximum communication distance in open environments is 30 m. ● EC-TX501-1 is equipped with a built-in antenna and applicable to molded case machines.

Name	Model	Specification
		● EC-TX501-2 is configured with an external sucker antenna and applicable to sheetmetal machines.
PROFIBUS-DP communication card	EC-TX503	Supporting the PROFIBUS-DP protocol
Ethernet communication card	EC-TX504	● Supporting Ethernet communication with HITACHI's internal protocol ● Can be used in combination with HITACHI's upper computer monitoring software S1 DriveManager
CAN multi-protocol communication card	EC-TX505C	● Based on the CAN2.0A and CAN2.0B physical layer ● Supporting the CANopen protocol ● Adopting HITACHI's master-slave control proprietary protocol
PROFINET communication card	EC-TX509C	Supporting the PROFINET protocol
Ethernet/IP communication card	EC-TX510	● Supporting the Ethernet IP protocol and ODVA protocol ● With two Ethernet IP ports, supporting 10/100M half/full duplex operating ● Supporting star, line, and ring network topologies (but not supporting ring network monitoring)
Modbus TCP communication card	EC-TX515	● With two Modbus TCP IO ports, supporting 100M full duplex operating, and supporting line and star network topologies, with the nodes up to 32 ● Able to function as a Modbus TCP slave
Sin/Cos PG card	EC-PG502	● Applicable to Sin/Cos encoders with or without CD signals ● Supporting A, B, Z frequency-divided output ● Supporting input of pulse train reference
UVW incremental PG card	EC-PG503-05	● Applicable to 5V differential encoders ● Supporting A, B, Z orthogonal input ● Supporting U, V, W 3PH pulse input ● Supporting A, B, Z frequency-divided output ● Supporting input of pulse train reference
Resolver PG card	EC-PG504-00	● Applicable to resolver encoders ● Supporting simulated A, B, Z frequency-divided output of resolvers ● Supporting input of pulse train reference
Multi-function incremental PG card	EC-PG505-12	● Applicable to OC encoders of 5 V or 12 V ● Applicable to push-pull encoders of 5 V or 12 V ● Applicable to differential encoders of 5 V ● Supporting the orthogonal input of A, B, and Z ● Supporting the frequency-divided output of A, B, and Z ● Supporting pulse train setting
24V incremental PG card	EC-PG505-24B	● Applicable to 24V OC encoders

Name	Model	Specification
		● Applicable to 24 V push-pull encoders ● Supporting A, B, Z orthogonal input ● Supporting A, B, Z frequency-divided output ● Supporting pulse train reference input
Simple incremental PG card	EC-PG507-12	● Applicable to 5 V or 12 V OC encoders ● Applicable to 5 V or 12 V push-pull encoders ● Applicable to 5 V differential encoders
24V simplified incremental PG card	EC-PG507-24	● Applicable to 24 V OC encoders ● Applicable to 24 V push-pull encoders ● Applicable to 24 V differential encoders
GPRS card	EC–IC501-2	● Supporting IoT monitoring ● Supporting remote Inverter upgrade
4G card	EC-IC502-2-CN EC-IC502-2-EU EC-IC502-2-LA	● Supporting standard RS485 interfaces ● Supporting 4G communication

IO expansion card
EC-IO501-00

IO expansion card 2
EC-IO502-00

Programmable expansion card
EC-PC502-00

Bluetooth/WIFI communication card
EC-TX501/502

PROFIBUS-DP communication card EC-TX503

Ethernet communication card EC-TX504

CAN multi-protocol communication card EC-TX505C

PROFINET communication card EC-TX509C

Ethernet/IP communication card EC-TX510 / Modbus TCP communication card EC-TX515

Sin/Cos PG card EC-PG502

UVW incremental PG card EC-PG503-05

Resolver PG card EC-PG504-00

Multifunction incremental PG card
EC-PG505-12

24V incremental PG card
EC-PG505-24B

Simplified incremental PG card
EC-PG507-12

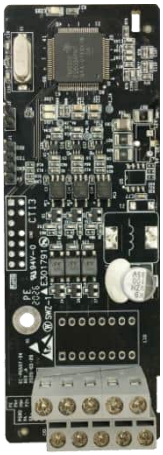

24V simplified incremental PG card
EC-PG507-24

GPRS card
EC–IC501-2

4G card
EC-IC502-2-CN
EC-IC502-2-EU
EC-IC502-2-LA

A.2 Dimensions and installation

All expansion cards are of the same dimensions (108 mm × 39 mm) and can be installed in the same way.

Following the following operation principles when installing or removing an expansion card:

1. Ensure that no power is applied before installing the expansion card.
2. The expansion card can be installed in any one of the SLOT1, SLOT2, and SLOT3 card slots.
3. Inverters of 05R5G/7R5P or below can be configured with two expansion cards, Inverters of 7R5G/011P or higher can be configured with three expansion cards.
4. If interference occurs on the external wires after expansion cards are installed, change their installation card slots flexibly to facilitate the wiring. For example, the connector of the connection cable of the DP card is large, so it is recommended to be installed in the SLOT1 card slot.

Figure A-1 shows the installation diagram and a Inverter with expansion cards installed.

Figure A-1 Inverter of 7R5G/011P or higher with expansion cards installed

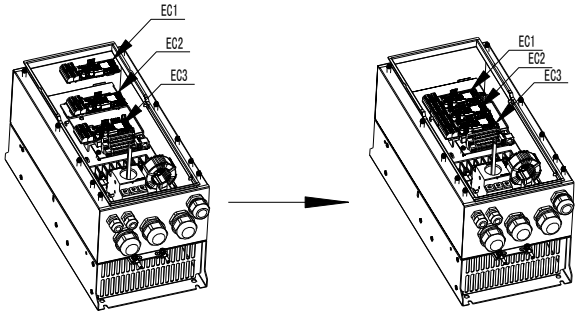

EC installation diagram

Diagram of ECs installed

Expansion card installation process:

Figure A-2 Expansion card installation process diagram

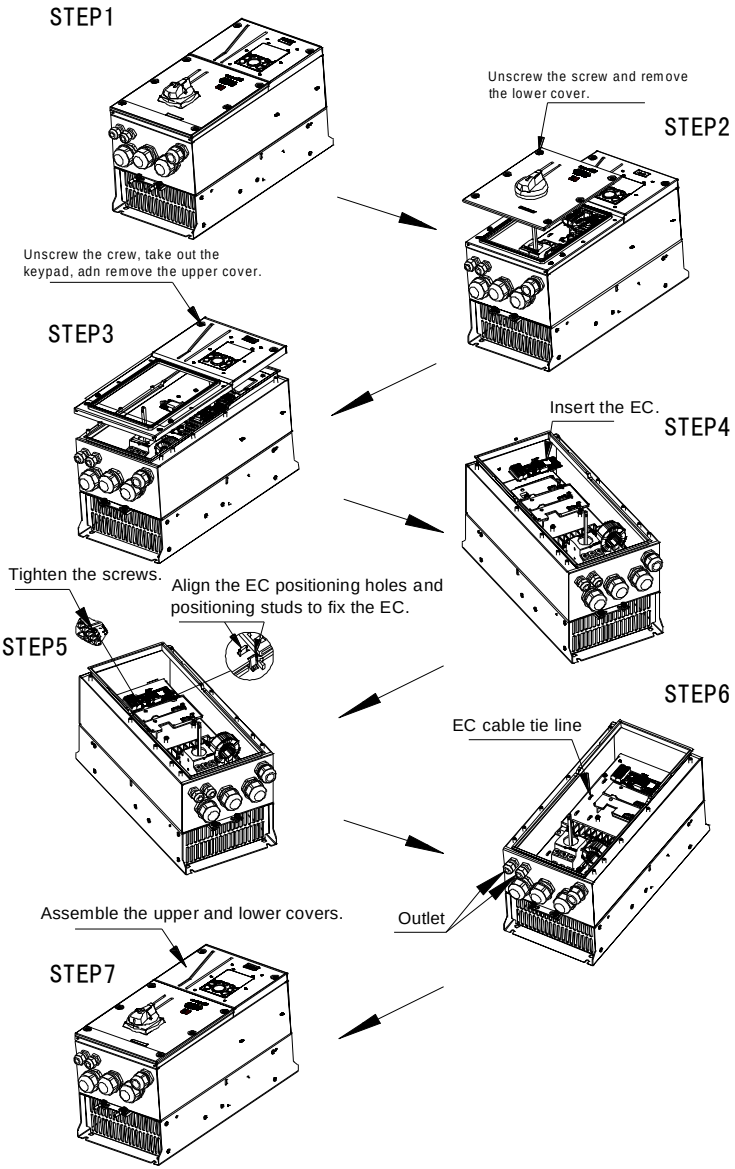

A.3 Wiring

1. Ground a shielded cable as follows:

Figure A-3 Expansion card grounding diagram

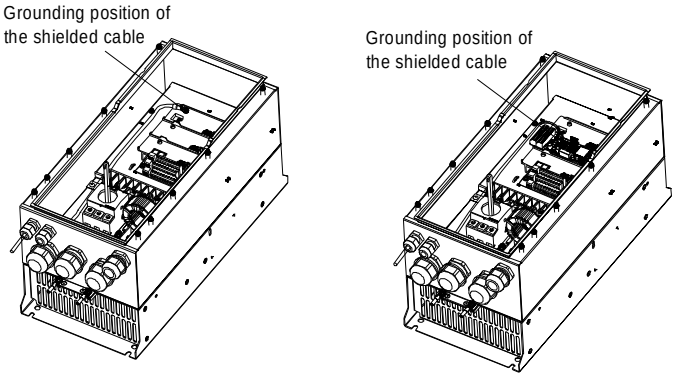

2. Wire an expansion card as follows:

Figure A-4 Expansion card wiring

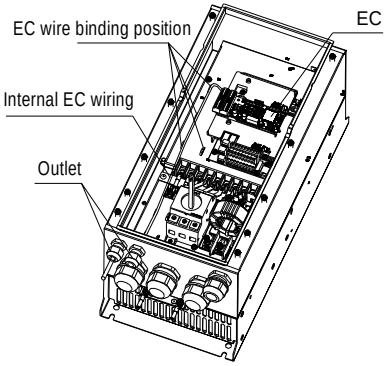

A.4 I/O expansion card

A.4.1 I/O expansion card 1 (EC-IO501-00)

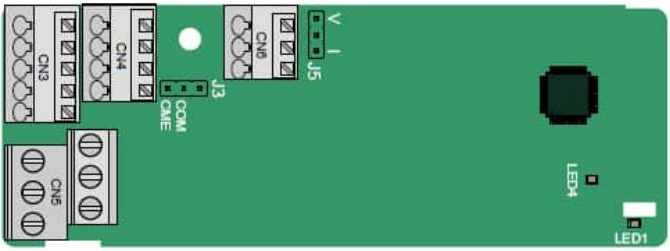

The terminals are arranged as follows:

CME and COM are shorted through J3 before delivery, and J5 is the jumper for selecting the output type (voltage or current) of AO2.

AI3	AO2	GND

COM	CME	Y2	S5	
PW	+24V	S6	S7	S8

RO3A	RO3B	RO3C

RO4A		RO4C

Indicator definition

Indicator	Name	Function
LED1	State indicator	This indicator is on when the expansion card is establishing a connection with the control board; it blinks periodically after the expansion card is properly connected to the control board (the period is 1s, on for 0.5s, and off for the other 0.5s); and it is off when the expansion card is disconnected from the control board.
LED4	Power indicator	This indicator is on after the IO expansion card is powered on by the control board.

The EC-IO501-00 expansion card can be used in scenarios where the I/O interfaces of a S1 IP55 high-ingress protection series Inverter cannot meet the application requirements. It can provide 4 digital inputs, 1 digital output, 1 analog input, 1 analog output, and two relay outputs. It is user-friendly, providing relay outputs through European-type screw terminals and other inputs and outputs through spring terminals.

EC-IO501-00 terminal function description

Category	Label	Name	Function description
Power	PW	External power supply	The working power of digital input is provided by an external power supply. Voltage range: 12–30 V The terminals PW and +24V are shorted before delivery.

Category	Label	Name	Function description
Analog input/output	AI3—GND	Analog input 1	1. Input range: 0–10 V, 0–20 mA 2. Input impedance: 20 kΩ for voltage input; 250 Ω for current input 3. Set it to be voltage or current input through the corresponding function code. 4. Resolution: When 10 V corresponds to 50 Hz, the minimum resolution is 5 mV. 5. Deviation:±0.5%; input of 5 V or 10 mA or higher at the temperature of 25°C
	AO2—GND	Analog output 1	1. Output range: 0–10 V, 0–20 mA 2. Whether it is voltage or current output is determined by J5. 3. Deviation ±0.5%; input of 5 V or 10 mA or higher at the temperature of 25°C
Digital input/output	S5—COM	Digital input 1	1. Internal impedance: 3.3 kΩ 2. Power input range: 12–30 V 3. Bidirectional input terminal 4. Max. input frequency: 1 kHz
	S6—COM	Digital input 2	
	S7—COM	Digital input 3	
	S8—COM	Digital input 4	
	Y2—CME	Digital output	1. Switch capacity: 50 mA/30 V 2. Output frequency range: 0–1 kHz 3. The terminals CME and COM are shorted through J3 before delivery.
Relay output	RO3A	NO contact of relay 3	1. Contact capacity: 3A/AC 250 V, 1 A/DC 30 V 2. Do not use them as high-frequency digital outputs.
	RO3B	NC contact of relay 3	
	RO3C	Common contact of relay 3	
	RO4A	NO contact of relay 4	
	RO4C	Common contact of relay 4	

A.4.2 I/O expansion card 2 (EC-IO502-00)

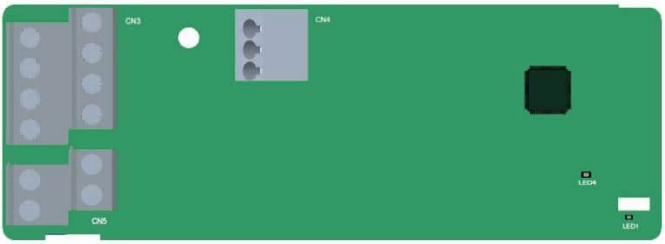

The terminals are arranged as follows.

PT1+	PT-	PT2+

S5	S6	S7	S8
+24V	PW	COM	COM

RO4A	RO4C

RO3A	RO3C

Indicator definition

Indicator	Definition	Function
LED1	State indicator	This indicator is on when the expansion card is establishing a connection with the control board; it blinks periodically after the expansion card is properly connected to the control board (the period is 1s, on for 0.5s, and off for the other 0.5s); and it is off when the expansion card is disconnected from the control board.
LED4	Power indicator	This indicator is on after the IO expansion card is powered on by the control board.

The EC-IO502-00 expansion card can be used in scenarios where the I/O interfaces of the Inverter cannot meet the application requirements. It can provide 4 digital inputs, 1 PT100 temperature measurement input (PT1+), 1 PT1000 temperature measurement input (PT2+), and 2 relay outputs. It is user-friendly, providing relay outputs and digital inputs through European-type screw terminals and temperature measurement inputs through spring terminals.

EC-IO502-00 terminal function description

Category	Symbol	Name	Function
Power	PW	External power supply	The working power of digital input is provided by an external power supply. Voltage range: 24(-20%)–48VDC(+10%), 24(-10%)–48VAC(+10%)
	+24V	Internal power	User power provided by the Inverter. Max. output current: 200mA
	COM	Power reference	Common terminal of +24V
Digital input	S5—COM	Digital input 5	Internal impedance: 6.6kΩ Supported external power: 24(-20%)–48VDC(+10%), 24(-10%)–48VAC(+10%) Supporting internal power 24V Bi-directional input terminals, supporting NPN/PNP modes Max. input frequency: 1kHz All are programmable digital input terminals. You can set the terminal function via function codes.
	S6—COM	Digital input 6	
	S7—COM	Digital input 7	
	S8—COM	Digital input 8	
Temperature detection input	PT1+	PT100 input	Independent PT100 and PT1000 inputs. PT1+ connects to PT100, and PT2+ connects to PT1000. 1. Resolution: 1°C 2. Range: -20°C–150°C 3. Detection accuracy: 3°C 4. Supporting offline protection
	PT2+	PT1000 input	
	PT-	Reference input of PT100/PT1000	Zero potential reference of PT100/PT1000
Relay output	RO3A	Contact A of NO relay 3	RO3 relay output. RO3A: NO; RO3C: common terminal

Category	Symbol	Name	Function
	RO3C	Contact C of NO relay 3	Contact capacity: 3A/AC250V, 1A/DC30V
	RO4A	Contact A of NO relay 4	RO4 relay output. RO4A: NO; RO4C: common terminal Contact capacity: 3A/AC250V, 1A/DC30V
	RO4C	Contact C of NO relay 4	

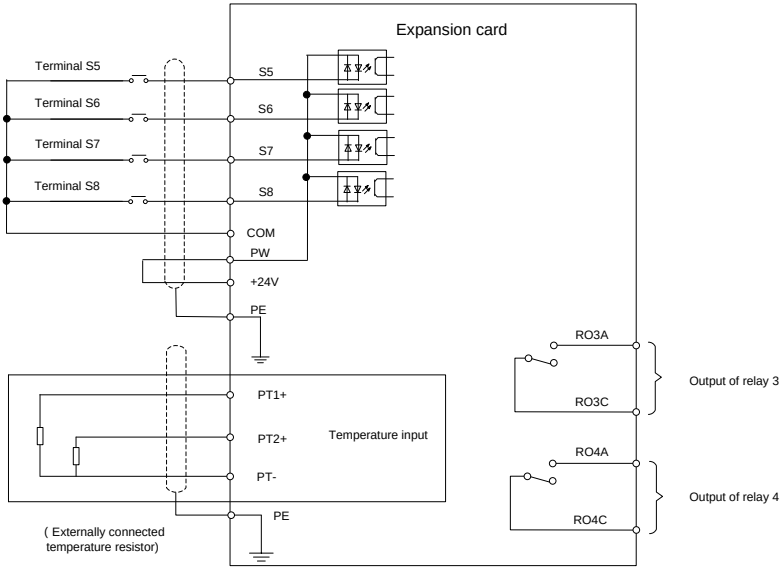

Figure A-5 Control circuit wiring of IO expansion card 2

A.5 Programmable expansion card (EC-PC502-00) function description

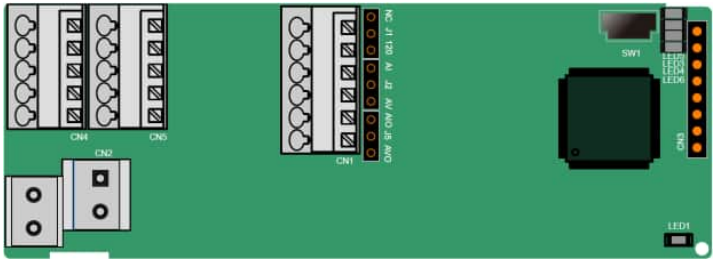

SW1 is the start/stop switch of the programmable expansion card. CN1 contains terminals PE, 485-, 485+, GND, AI1, and AO1, and a selection jumper resides on the next. "AI" and "AV" are the current type input selection and voltage type input selection of AI1, and they can be

selected through J2. "AIO" and "AVO" are the current type output selection and voltage type output selection of AO1, and they can be selected through J5. "120" indicates 120Ω terminal resistor, and it can connect to J1. By default, J1 connects to NC, J2 to AV, and J5 to AVO.

The terminals are arranged as follows:

PE	485-	485+	GND	AI1	AO1

COM	COM	PS1	PS2	PS3
PW	24V	PS4	PS5	PS6

PRO1A	PRO1C	
	PRO2A	PRO2C

Indicator definition:

Indicator	Name	Function
LED1	Power indicator (Green)	This indicator is on when the expansion card is powered on.
LED3	Communication indicator (Green)	This indicator is on when the expansion card is establishing a connection with the control board; it blinks periodically after the expansion card is properly connected to the control board (the period is 1s, on for 0.5s, and off for the other 0.5s); and it is off when the expansion card is disconnected from the control board.
LED4	Error indicator (Red)	This indicator blinks when an error occurs (the blinking period is 1s, on for 0.5s, and off for the other 0.5s). You can query the error types on the upper computer Auto Station. This indicator is off when there is no error.
LED5	Power indicator	This indicator is on when the expansion card is powered on.
LED6	RUN indicator (Green)	This indicator is on when the PLC program is running; it is off when the PLC program stops.

The EC-PC502-00 programmable expansion card can replace some micro PLC applications. It adopts the global mainstream development environment PLC, supporting the instruction language (IL), ladder diagram (LD), and sequential function chart (SFC). It provides a user program storage space of 16K steps and data storage space of 8K words, and supports saving data of 1K words at power failure, which facilitate customers' secondary development and meets the customization requirements.

The EC-PC502-00 programmable expansion card provides 6 digital inputs, 2 relay outputs, 1 analog input, 1 analog output, and 1 RS485 communication channel (for master/slave switchover). It is user-friendly, providing relay outputs through European-type screw terminals and other inputs and outputs through spring terminals.

EC-PC502-00 terminal function description:

Category	Sign	Name	Function
Power	PW	External power	The working power of digital input is provided by an external power supply.

Category	Sign	Name	Function
			Voltage range: 12–24 V The terminals PW and +24V should be short connected before use.
	24V	Internal power	Internal output power: 100mA
Digital input/output	PS1—COM	Digital input 1	1. Internal impedance: 4 kΩ 2. Allowable voltage input: 12–30 V 3. Bidirectional terminal 4. Max. input frequency: 1 kHz 5. Supporting both source type input and sink type input, but the input type must be the same
	PS2—COM	Digital input 2	
	PS3—COM	Digital input 3	
	PS4—COM	Digital input 4	
	PS5—COM	Digital input 5	
	PS6—COM	Digital input 6	
Analog input/output	AI1	Analog input 1	1. Input range: 0~10V or 0~20mA 2. Input resistance: 20kΩ for voltage input, and 250kΩ for current input 3. Whether the input is the voltage or current type is set through the jumper. 4. Resolution: When 10V corresponds to 50Hz, the min. resolution is 5mV. 5. Deviation ±1%, 25°C, full measuring range
	AO1	Analog output 1	1. Output range: 0~10V voltage or 0~20mA current 2. Whether the output is the voltage or current type is set through the jumper. 3. Deviation ±1%, 25°C, full measuring range
Relay output	PRO1A	NO contact of relay 1	1. Contact capacity: 3A/AC 250 V, 1 A/DC 30 V 2. Do not use them as high-frequency digital outputs.
	PRO1B	NC contact of relay 1	
	PRO1C	Common contact of relay 1	
	PRO2A	NO contact of relay 2	
	PRO2C	Common contact of relay 2	

For details about the operation of programmable expansion cards, see the *S1 Series AutoStation Programmable Card Operation Manual*.

A.6 Communication card function description

A.6.1 Bluetooth communication card (EC-TX501) and WIFI communication card (EC-TX502)

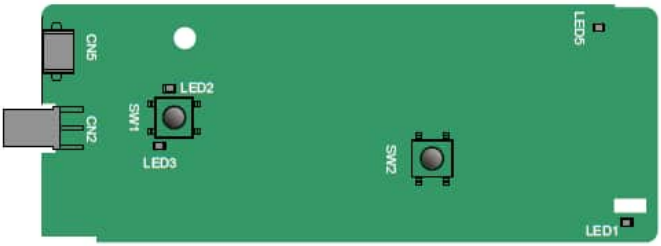

Definitions of indicators and function buttons:

Indicator	Name	Function
LED1/LED3	Bluetooth/WIFI state indicator	LED is on when the expansion card is establishing a connection with the control board; LED blinks periodically after the expansion card is properly connected to the control board (the period is 1s, on for 0.5s, and off for the other 0.5s); and LED is off when the expansion card is disconnected from the control board.
LED2	Bluetooth communication state indicator	This indicator is on when Bluetooth communication is online and data exchange can be performed. It is off when Bluetooth communication is not in the online state.
LED5	Power indicator	This indicator is on after the control board feeds power to the Bluetooth card.
SW1	WIFI factory reset button	It is restored to default values and returned to the local monitoring mode.
SW2	WIFI hardware reset button	It is used to reboot the expansion card.

The wireless communication card is especially useful for scenarios where you cannot directly use the keypad to operate the Inverter due to the restriction of the installation space. With a mobile phone APP, you can operate the Inverter in a maximum distance of 30 m. You can choose a PCB antenna or an external sucker antenna. If the Inverter is located in an open space and is a molded case machine, you can use a built-in PCB antenna; and if it is a sheetmetal machine and located in a metal cabinet, you need to use an external sucker antenna.

When installing a sucker antenna, install a wireless communication card on the Inverter first, and then lead the SMA connector of the sucker antenna into the Inverter and screw it to CN2, as shown in the following figure. Place the antenna base on the chassis and expose the upper part. Try to keep it unblocked.

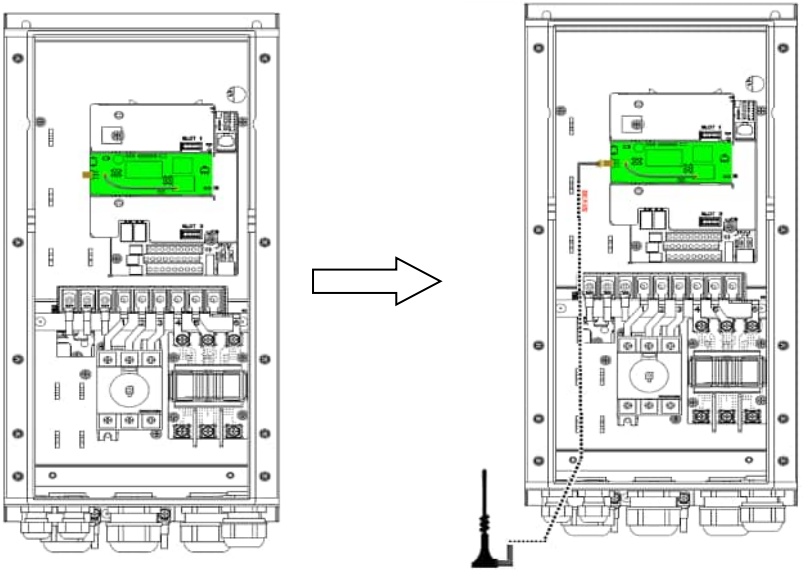

A.6.2 PROFIBUS-DP communication card (EC-TX503)

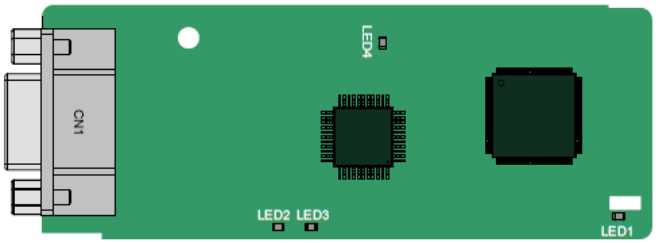

CN1 is a 9-pin D-type connector, as shown in the following figure.

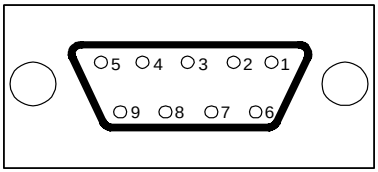

Connector pin		Description
1	-	Unused
2	-	Unused
3	B-Line	Data+ (twisted pair 1)
4	RTS	Request sending
5	GND_BUS	Isolation ground

Connector pin		Description
6	+5V BUS	Isolated power supply of 5 V DC
7	-	Unused
8	A-Line	Data- (twisted pair 2)
9	-	Unused
Housing	SHLD	PROFIBUS cable shielding line

+5V and GND_BUS are bus terminators. Some devices, such as the optical transceiver (RS485), may need to obtain power through these pins.

On some devices, the transmission and receiving directions are determined by RTS. In normal applications, only A-Line, B-Line, and the shield layer need to be used.

Indicator definition

Indicator	Name	Function
LED1	State indicator	On: The expansion card is establishing a connection with the control board. Blinking periodically: The expansion card is properly connected to the control board (the period is 1s, on for 0.5s, and off for the other 0.5s). Off: The expansion card is disconnected from the control board.
LED2	Online indicator	On: The communication card is online and data exchange can be performed. Off: The communication card is not in the online state.
LED3	Offline/Fault indicator	On: The communication card is offline and data exchange cannot be performed. Blinks: The communication card is not in the offline state. Blinks at the frequency of 1 Hz: A configuration error occurs: The length of the user parameter data set during the initialization of the communication card is different from that during the network configuration. Blinks at the frequency of 2 Hz: User parameter data is incorrect. The length or content of the user parameter data set during the initialization of the communication card is different from that during the network configuration. Blinks at the frequency of 4 Hz: An error occurs in the ASIC initialization of PROFIBUS communication. Off: The diagnosis function is disabled.
LED4	Power indicator	On: The control board feeds power to the communication card.

For details about the operation, see the *S1 Series Inverter Communication Expansion card Operation Manual*.

A.6.3 Ethernet communication card (EC-TX504)

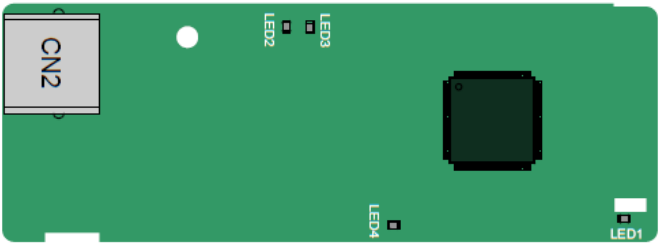

The EC-TX504 communication card adopts standard RJ45 terminals. The EC-TX504 card supports S1 DriveManager software. For usage with standard Ethernet/IP protocol, please install the EC-TX510 card.

Indicator definition

Indicator	Name	Function
LED1	State indicator	On: The expansion card is establishing a connection with the control board. Blinking periodically: The expansion card is properly connected to the control board (the period is 1s, on for 0.5s, and off for the other 0.5s). Off: The expansion card is disconnected from the control board.
LED2	Network connection status indicator	On: The physical connection to the upper computer is normal. Off: The upper computer is disconnected.
LED3	Network communication status indicator	On: There is data exchange with the upper computer. Off: There is no data exchange with the upper computer.
LED4	Power indicator	On: The control board feeds power to the communication card.

A.6.4 CAN multi-protocol communication card (EC-TX505C)

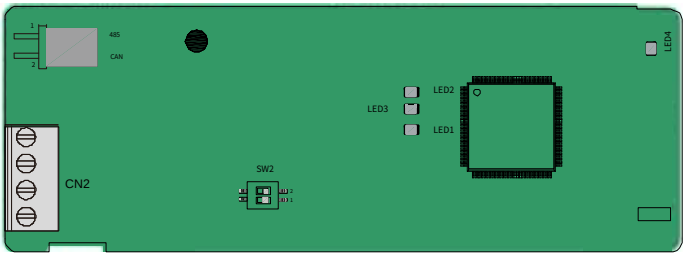

The EC-TX505C communication card is user-friendly, adopting spring terminals.

Label	Description	
PGND	Isolation ground	Isolation ground
PE	Shielded	CAN bus shielding
CANH	CANopen bus high level signal	CAN bus high level signal
CANL	CANopen bus low level signal	CAN bus low level signal
485	485 terminal resistor switch	ON: RS485+ and RS485- are connected to a terminal resistor of 120 Ω.
		OFF: RS485+ and RS485- are not connected to a terminal resistor.
CAN	CAN terminal resistor switch	ON: CAN_H and CAN_L are connected to a terminal resistor of 120 Ω.
		OFF: CAN_H and CAN_L are not connected to a terminal resistor.

Note: Before power on, please select the protocol type by setting the DIP switch SW2 as follows:

DIP switch SW2		
1	2	**Protocol type**
OFF	OFF	CANopen
ON	OFF	CAN master/slave

Indicator definition

Indicator	Name	Function
LED1	State indicator	On: The expansion card is establishing a connection with the control board. Blinking periodically: The expansion card is properly connected to the control board (the period is 1s, on for 0.5s, and off for the other 0.5s). Off: The expansion card is disconnected from the control board.
LED2	Running indicator	On: The communication card is running. Off: A fault occurs. Check whether the reset pin of the communication card and the power supply are properly connected. Blinks: The communication card is in the pre-operation state. Blinks once: The communication card is in the stopped state.
LED3	Error indicator	On: The communication card is running. Blinks: The communication card is in the pre-operation state. Off: A fault occurs. Check whether the reset pin of the communication card and the power supply are properly connected. The communication card is in the stopped state.
LED4	Power indicator	On: The CAN controller bus is off, a fault occurs on the inverter, or a received frame is missed or an error occurs during frame receiving. Off: The communication card is in the working state.

For details about the operation, see the *S1 Series Inverter Communication Expansion card Operation Manual*.

A.6.5 PROFINET communication card (EC-TX509C)

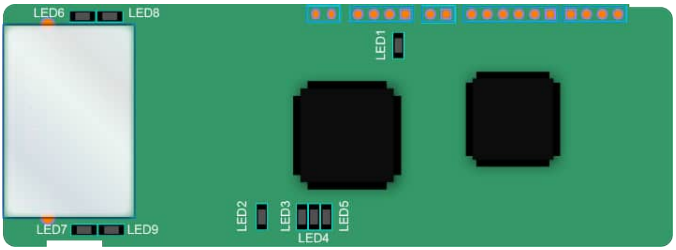

The terminal CN2 adopts a standard RJ45 interface, where CN2 is the dual RJ45 interface, and these two RJ45 interfaces are not distinguished from each other and can be interchangeably inserted. They are arranged as follows:

Pin	Name	Description
1	n/c	Not connected
2	n/c	Not connected
3	RX-	Receive Data-
4	n/c	Not connected
5	n/c	Not connected
6	RX+	Receive Data+
7	TX-	Transmit Data-
8	TX+	Transmit Data+

Definition of the state indicator

The PROFINET communication card has 9 indicators, of which LED1 is the power indicator, LED2–5 are the communication state indicator of the communication card, and LED6–9 are the state indicators of the network port.

LED	Color	State	Description
LED1	Green		3.3V power indicator
LED2 (Bus state indicator)	Red	On	No network connection
		Blinking	The connection to the network cable between the PROFINET controller is normal, but the communication is not established.
		Off	Communication with the PROFINET controller has been established
LED3 (System fault indicator)	Green	On	PROFINET diagnosis exists
		Off	No PROFINET diagnosis
LED4 (Slave ready indicator)	Green	On	TPS-1 protocol stack has started
		Blinking	TPS-1 waits for MCU initialization
		Off	TPS-1 protocol stack does not start
LED5 (Maintenance state indicator)	Green	/	Manufacturer-specific–depending on the characteristics of the device

LED	Color	State	Description
LED6/7 (Network port state indicator)	Green	On	PROFINET communication card and PC/PLC have been connected via a network cable
		Off	PROFINET communication card and PC/PLC have not been connected yet
LED8/9 (Network port communication indicator)	Green	Blinking	PROFINET communication card and PC/PLC are communicating
		Off	PROFINET communication card and PC/PLC are not yet communicating

Electrical connection:

The PROFINET communication card adopts a standard RJ45 interface, which can be used in a linear network topology and a star network topology. The linear network topology electrical connection diagram is shown as follows:

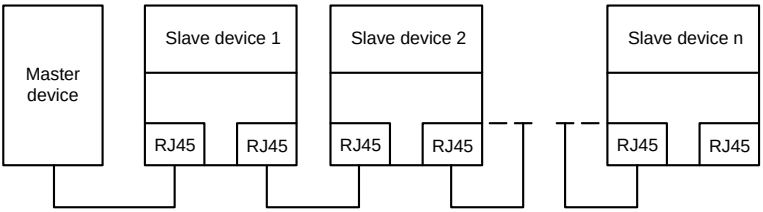

The star network topology electrical connection diagram is shown as follows:

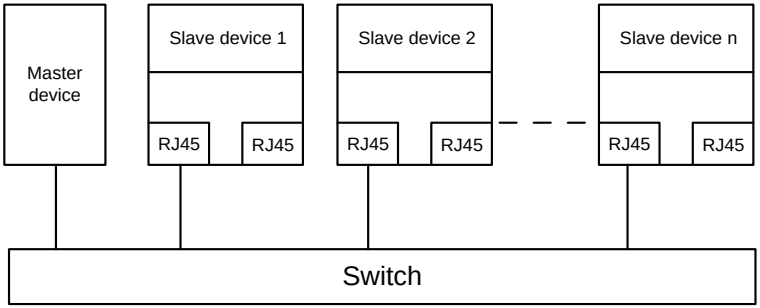

Note: For the star network **topology**, users need to prepare PROFINET switches.

A.6.6 Ethernet/IP communication card (EC-TX510) and Modbus TCP communication card (EC-TX515)

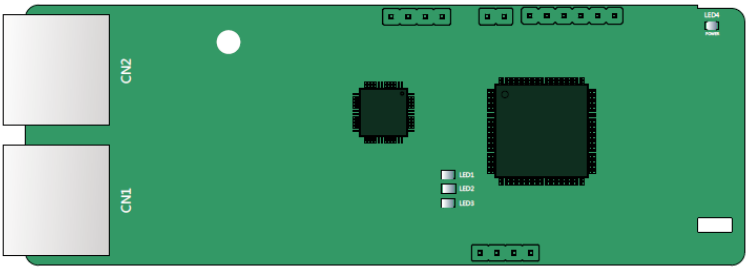

The terminal CN2 adopts standard dual RJ45 interfaces, and the two RJ45 interfaces are not distinguished from each other and can be interchangeably inserted.

Figure A-6 Standard RJ45 interface

Standard RJ45 interface functions

Pin	Name	Description
1	TX+	Transmit Data+
2	TX-	Transmit Data-
3	RX+	Receive Data+
4	n/c	Not connected
5	n/c	Not connected
6	RX-	Receive Data-
7	n/c	Not connected
8	n/c	Not connected

State indicators

The EtherNet/IP communication card provides four LED indicators and four net port indicators to indicate its states.

LED	Color	State	Description
LED1	Green	On	The card is shaking hands with the Inverter.
		Blinking (1Hz)	The card and Inverter communicate normally.
		Off	The card and Inverter communicate improperly.
LED2	Green	On	The communication between the card and PLC is online and data interchange is allowed.
		Blinking (1Hz)	IP address conflict between the card and PLC.
		Off	The communication between the card and PLC is offline.
LED3	Red	On	Failed to set up I/O between the card and PLC.
		Blinking (1Hz)	Incorrect PLC configuration.
		Blinking (2Hz)	The card failed to send data to the PLC.

LED	Color	State	Description
		Blinking (4Hz)	The connection between the card and PLC timed out.
		Off	No fault.
LED4	Red	On	3.3V power indicator.
Net port indicator	Yellow	On	Link indicator, indicating successful Ethernet connection.
		Off	Link indicator, indicating Ethernet connection not established.
Net port indicator	Green	On	ACK indicator, indicating data interchange being performed.
		Off	ACK indicator, indicating data interchange not be performed.

Electrical wiring

The EtherNet/IP communication card provides standard RJ45 ports and supports the linear, star, and ring topologies. The following three figures show the electrical wiring diagrams.

Use CAT5, CAT5e, and CAT6 network cables for electrical wiring. When the communication distance is greater than 50 meters, use high-quality network cables that meet the high-quality standards.

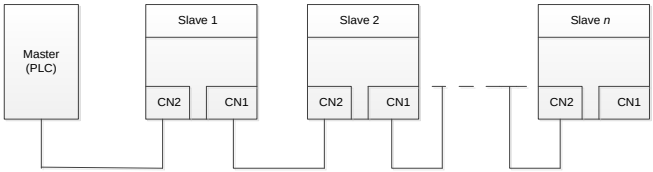

Figure A-7 Electrical wiring diagram for a linear topology

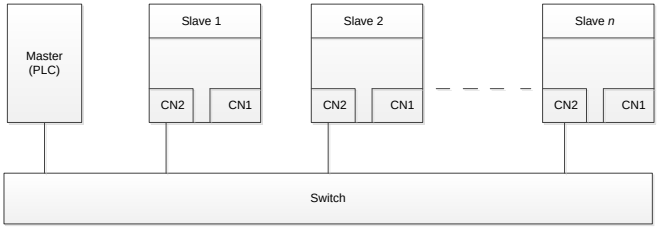

Figure A-8 Electrical wiring diagram for a star topology

Note: Ethernet switches must be available when the star topology is used.

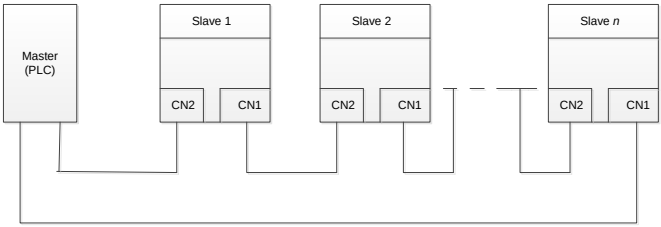

Figure A-9 Electrical wiring diagram for a ring network

A.7 PG expansion card function description

A.7.1 Sin/Cos PG card (EC-PG502)

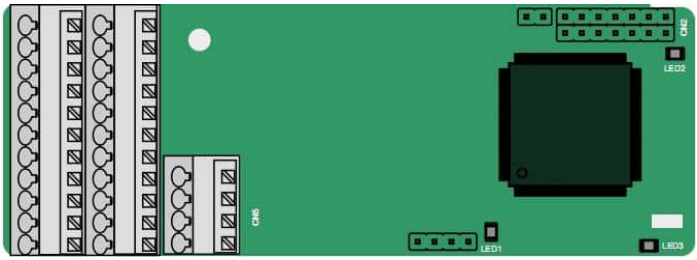

The terminals are arranged as follows:

							C1+	C1-	D1+	D1-
PE	AO+	BO+	ZO+	A1+	B1+	R1+	A2+	B2+	Z2+	PWR
GND	AO-	BO-	ZO-	A1-	B1-	R1-	A2-	B2-	Z2-	GND

Indicator definition

Indicator	Name	Description
LED1	Disconnection indicator	Off: A1 and B1 of the encoder are disconnected. Blinking: C1 and D1 of the encoder are disconnected. On: The encoder signals are normal.
LED2	Power indicator	On: The control board feeds power to the PG card.
LED3	State indicator	On: The expansion card is establishing a connection with the control board. Blinking periodically: The expansion card is properly connected to the control board (the period is 1s, on for 0.5s, and off for the other 0.5s). Off: The expansion card is disconnected from the control board.

EC-PG502 terminal function description

Signal	Port	Function
PWR	Encoder power	Voltage: 5 V ± 5% Max. output current: 150 mA
GND		
A1+	Encoder interface	1. Supporting Sin/Cos encoders 2. SINA/SINB/SINC/SIND 0.6–1.2Vpp; SINR 0.2–0.85Vpp 3. Max. frequency response of A/B signals: 200 kHz Max. frequency response of C/D signals: 1 kHz
A1-		
B1+		
B1-		
R1+		
R1-		
C1+		
C1-		

Signal	Port	Function
D1+		
D1-		
A2+	Pulse reference	1. Supporting 5V differential signal 2. Frequency response: 200 kHz
A2-		
B2+		
B2-		
Z2+		
Z2-		
AO+	Frequency-divided output	1. Differential output of 5 V 2. Supporting frequency division of 2^N, which can be set through P20.16 or P24.16; Max. output frequency: 200 kHz
AO-		
BO+		
BO-		
ZO+		
ZO-		

The following figure shows the external wiring of the PG card when it is used in combination with an encoder without CD signals.

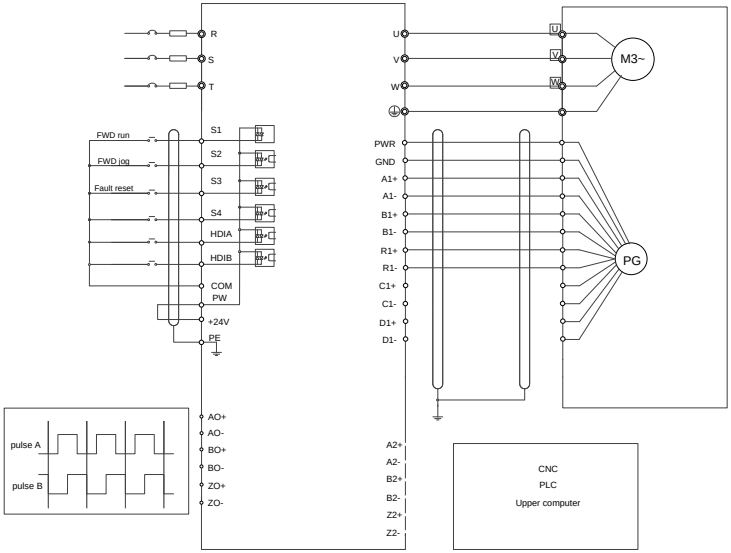

The following figure shows the external wiring of the PG card when it is used in combination with an encoder with CD signals.

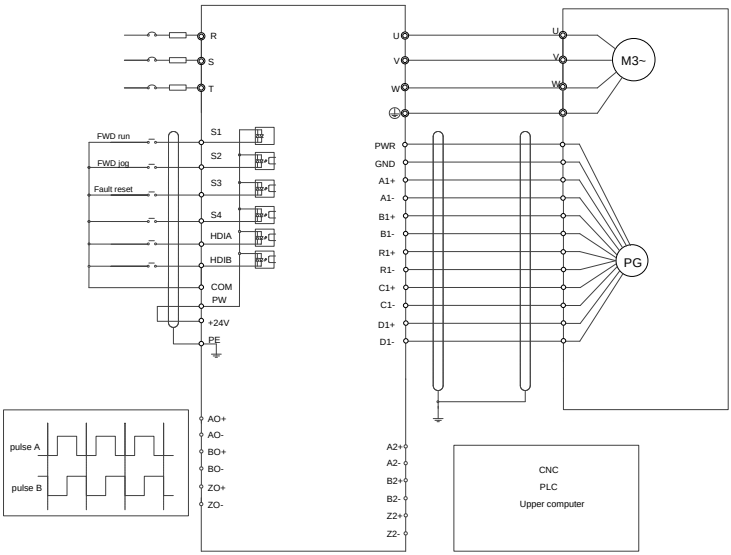

A.7.2 UVW incremental PG card (EC-PG503-05)

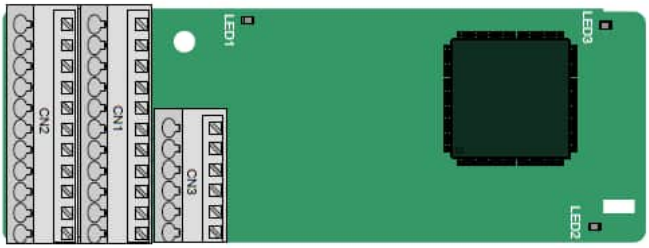

The terminals are arranged as follows:

					A2+	A2-	B2+	B2-	Z2+	Z2-
PE	AO+	BO+	ZO+	A1+	B1+	Z1+	U+	V+	W+	PWR
GND	AO-	BO-	ZO-	A1-	B1-	Z1-	U-	V-	W-	PGND

Indicator definition

Indicator	Name	Description
LED1	Disconnection indicator	This indicator blinks only if A1 or B1 signal is disconnected during encoder rotating; and it is on in other cases.
LED2	State indicator	On: The expansion card is establishing a connection with the control board. Blinking periodically: The expansion card is properly

Indicator	Name	Description
		connected to the control board (the period is 1s, on for 0.5s, and off for the other 0.5s). Off: The expansion card is disconnected from the control board.
LED3	Power indicator	On: The control board feeds power to the PG card.

The EC-PG503-05 expansion card supports the input of absolute position signals and integrates the advantages of absolute and incremental encoders. It is user-friendly, adopting spring terminals.

EC-PG503-05 terminal function description

Label	Name	Function description
PE	Grounding terminal	It is connected to the ground for enhancing the anti-interference performance
GND	Ground	PCB internal power ground
PWR	Encoder power	Voltage: 5 V±5% Max. current: 200 mA (PGND is isolation power ground)
PGND		
A1+	Encoder interface	1. Differential incremental PG interface of 5 V 2. Response frequency: 400 kHz
A1-		
B1+		
B1-		
Z1+		
Z1-		
A2+	Pulse setting	1. Differential input of 5 V 2. Response frequency: 200 kHz
A2-		
B2+		
B2-		
Z2+		
Z2-		
AO+	Frequency-divided output	1. Differential output of 5 V 2. Supporting frequency division of 1–255, which can be set through P20.16 or P24.16
AO-		
BO+		
BO-		
ZO+		
ZO-		
U+	UVW encoder interface	1. Absolute position (UVW information) of the hybrid encoder, differential input of 5 V 2. Response frequency: 40 kHz
U-		
V+		
V-		
W+		
W-		

The following figure shows the external wiring of the EC-PG503-05 expansion card.

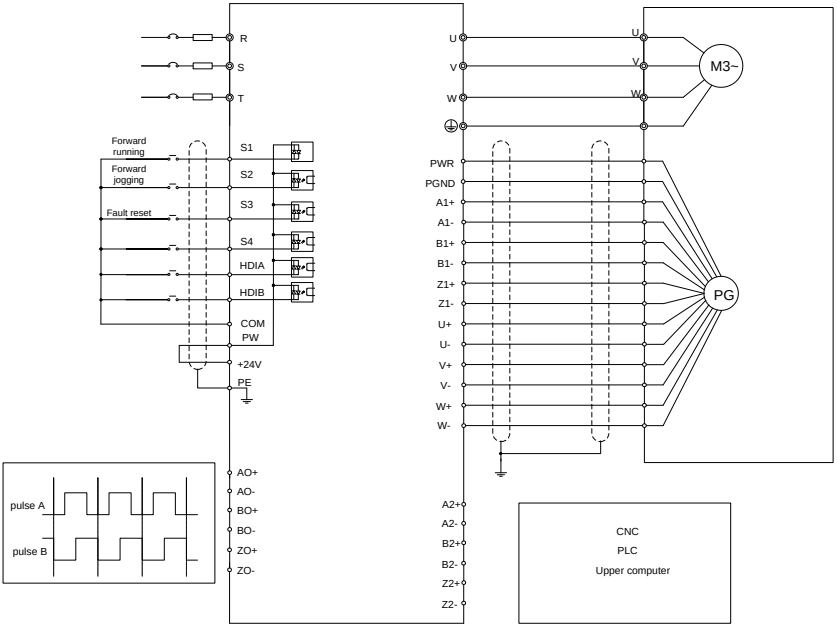

A.7.3 Resolver PG card (EC-PG504-00)

PE	AO+	BO+	ZO+	EX+	SI+	CO+	A2+	B2+	Z2+	PWR
GND	AO-	BO-	ZO-	EX-	SI-	CO-	A2-	B2-	Z2-	GND

Indicator definition

Indicator	Name	Description
LED1	State indicator	On: The expansion card is establishing a connection with the control board. Blinking periodically: The expansion card is properly connected to the control board (the period is 1s, on for

Indicator	Name	Description
		0.5s, and off for the other 0.5s). Off: The expansion card is disconnected from the control board.
LED2	Disconnection indicator	Off: The encoder is disconnected. On: The encoder signals are normal. Blinks: The encoder signals are not stable.
LED3	Power indicator	On: The control board feeds power to the PG card.

The EC-PG504-00 expansion card can be used in combination with a resolver of excitation voltage 7 Vrms. It is user-friendly, adopting spring terminals.

EC-PG504-00 terminal function description

Label	Name	Function description
SI+	Encoder signal input	Recommended resolver transformation ratio: 0.5
SI-		
CO+		
CO-		
EX+	Encoder excitation signal	1. Factory setting of excitation: 10 kHz 2. Supporting resolvers with an excitation voltage of 7 Vrms
EX-		
A2+	Pulse setting	1. Differential input of 5 V 2. Response frequency: 200 kHz
A2-		
B2+		
B2-		
Z2+		
Z2-		
AO+	Frequency-divided output	1. Differential output of 5 V 2. Frequency-divided output of resolver simulated A1, B1, and Z1, which is equal to an incremental PG card of 1024 pps. 3. Supporting frequency division of 1–255, which can be set through P20.16 or P24.16 4. Max. output frequency: 200 kHz
AO-		
BO+		
BO-		
ZO+		
ZO-		

The following figure shows the external wiring of the EC-PG504-00 expansion card.

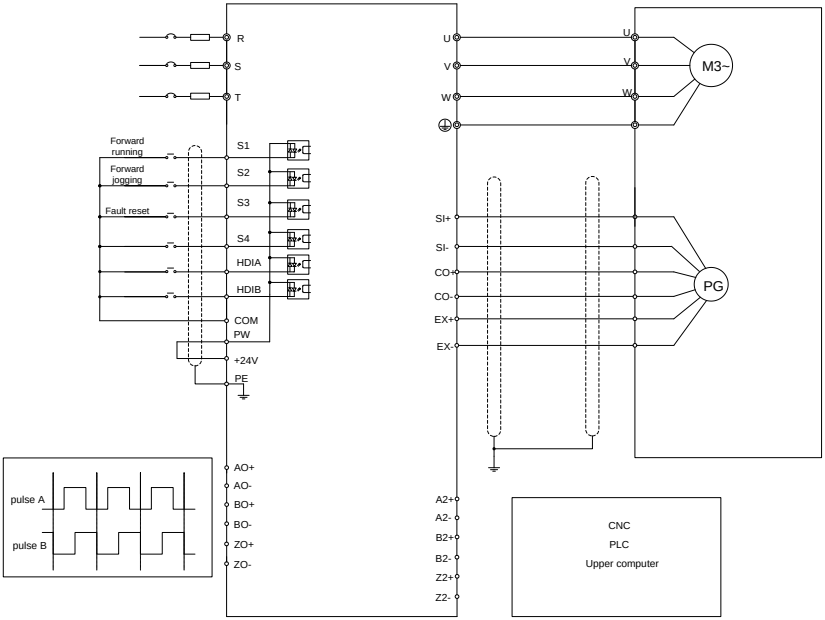

A.7.4 Multi-function incremental PG card (EC-PG505-12)

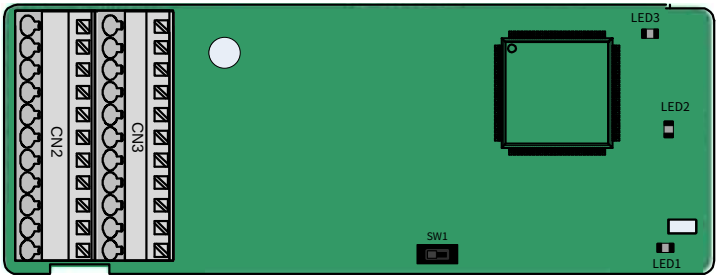

The dual in-line package (DIP) switch SW1 is used to set the voltage class (5 V or 12 V) of the power supply of the encoder. The DIP switch can be operated with an auxiliary tool.

The terminals are arranged as follows:

PE	AO+	BO+	ZO+	A1+	B1+	Z1+	A2+	B2+	Z2+	PWR
GND	AO-	BO-	ZO-	A1-	B1-	Z1-	A2-	B2-	Z2-	PGND

Indicator definition

Indicator	Name	Function
LED1	State indicator	This indicator is on when the expansion card is establishing a connection with the control board; it blinks periodically after the expansion card is properly connected to the control board (the period is 1s, on for 0.5s, and off for the other 0.5s); and it is off when the expansion card is disconnected from the control board.
LED2	Disconnection indicator	When the encoder is rotating, this indicator blinks when A1 or B1 of the encoder are disconnected; otherwise it is always on.
LED3	Power indicator	This indicator is on after the control board feeds power to the PG card.

The EC-PG505-12 expansion card can be used in combination with multiple types of incremental encoders through different modes of wiring. It is user-friendly, adopting spring terminals.

EC-PG505-12 terminal function description

Label	Name	Function description
PWR	Encoder power	Voltage: 5 V/12 V ±5% Max. output: 150 mA Select the voltage class through the DIP switch SW1 based on the voltage class of the used encoder. (PGND is isolation power ground)
PGND		
A1+	Encoder interface	1. Supporting push-pull interfaces of 5 V/12 V 2. Supporting open collector interfaces of 5 V/12 V 3. Supporting differential interfaces of 5 V 4. Response frequency: 400 kHz
A1-		
B1+		
B1-		
Z1+		
Z1-		
A2+	Pulse setting	1. Supporting the same signal types as the encoder signal types 2. Response frequency: 400 kHz
A2-		
B2+		
B2-		
Z2+		
Z2-		
AO+	Frequency-divided output	1. Differential output of 5 V 2. Supporting frequency division of 1–255, which can be set through P20.16 or P24.16
AO-		
BO+		
BO-		
ZO+		
ZO-		

The following figure shows the external wiring of the expansion card used in combination with an open collector encoder. A pull-up resistor is configured inside the PG card.

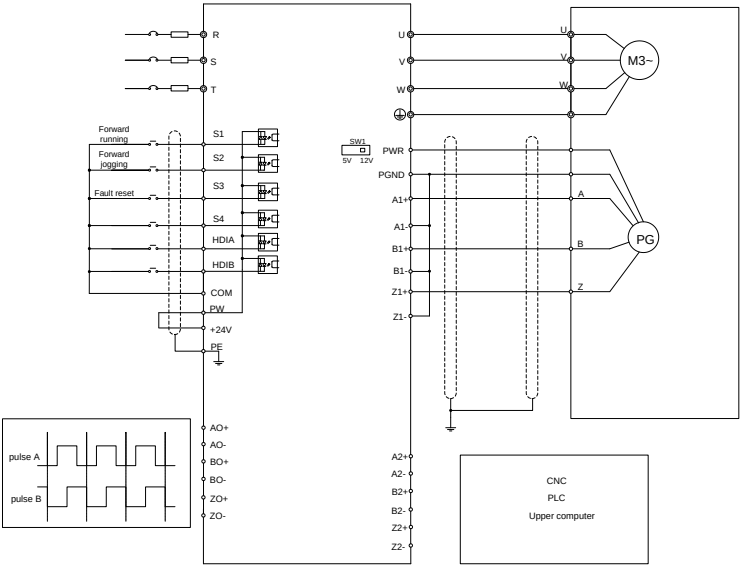

The following figure shows the external wiring of the expansion card used in combination with a push-pull encoder.

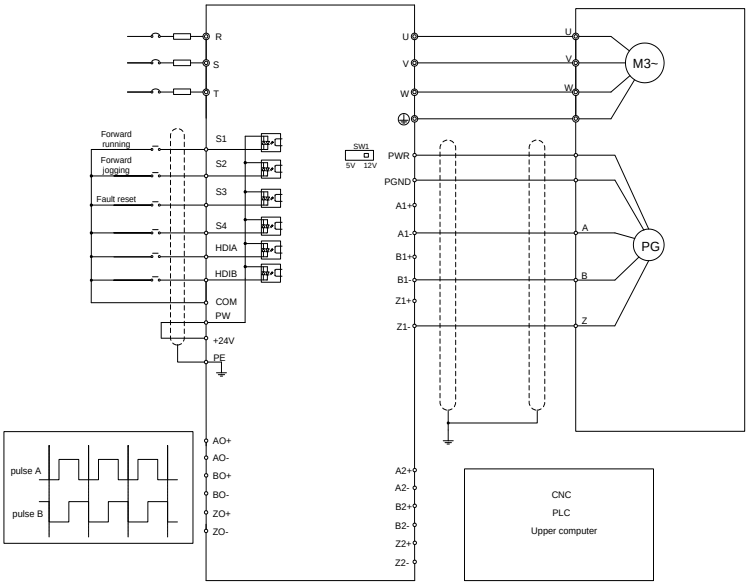

The following figure shows the external wiring of the expansion card used in combination with a differential encoder.

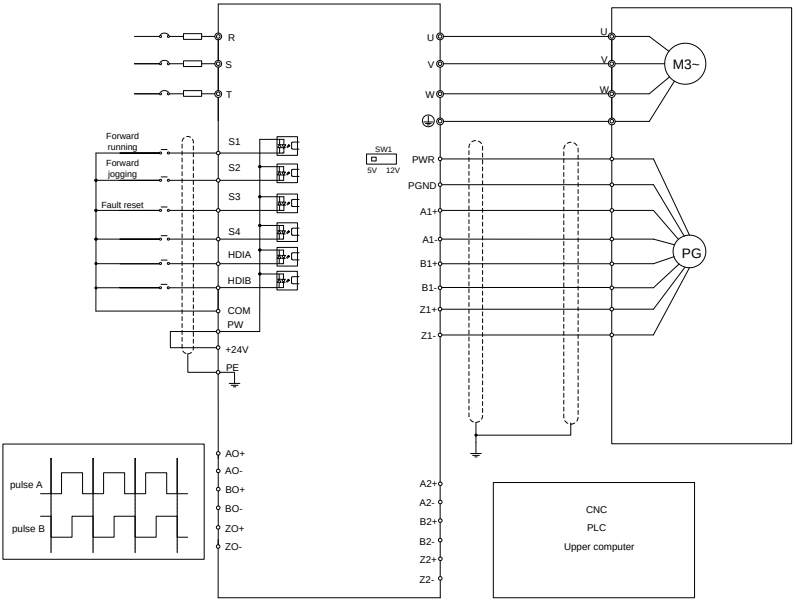

A.7.5 24V incremental PG card (EC-PG505-24B)

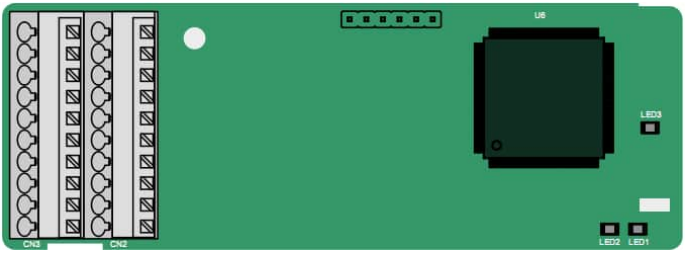

The terminals are arranged as follows:

PE	AO+	BO+	ZO+	A1+	B1+	Z1+	A2+	B2+	Z2+	PWR
GND				A1-	B1-	Z1-	A2-	B2-	Z2-	PGND

Indicator definition

Indicator	Name	Description
LED1	State indicator	On: The expansion card is establishing a connection with the control board. Blinking periodically: The expansion card is properly connected to the control board (the period is 1s, on for 0.5s,

Indicator	Name	Description
		and off for the other 0.5s). Off: The expansion card is disconnected from the control board.
LED2	Disconnection indicator	This indicator blinks only if A1 or B1 signal is disconnected during encoder rotating; and it is on in other cases.
LED3	Power indicator	On: The control board feeds power to the PG card.

EC-PG505-24B can work in combination with multiple types of incremental encoders through various external wiring modes. It is user-friendly, adopting spring terminals. AO-, BO-, AND ZO- are internally short connected to PGND.

EC-PG505-24B terminal function description

Signal	Port	Description
PWR	Encoder power supply	Voltage: 24 V ± 5% Max. output current: 150 mA
PGND		
A1+	Encoder interface	1. Supporting 24 V push-pull interfaces 2. Supporting 24 V open collector interfaces 3. Supporting 24V differential interfaces 4. Frequency response: 400 kHz
A1-		
B1+		
B1-		
Z1+		
Z1-		
A2+	Pulse reference	1. Supporting interfaces whose signal type is the same as the encoder 2. Supporting 5V differential interface (The differential signal should not share the COM terminal) 3. Frequency response: 400 kHz
A2-		
B2+		
B2-		
Z2+		
Z2-		
AO+	Frequency-divided output	1. Supporting open collector output. The input is externally connected with the upper resistor. 2. Supporting frequency division of 1–255, which can be set through P20.16 or P24.16. 3. Supporting frequency division output source, which can be set through P20.17 or P24.17.
BO+		
ZO+		

The following figure shows the external wiring of the PG card when it is used in combination with an open collector encoder. A pull-up resistor is configured in the PG card.

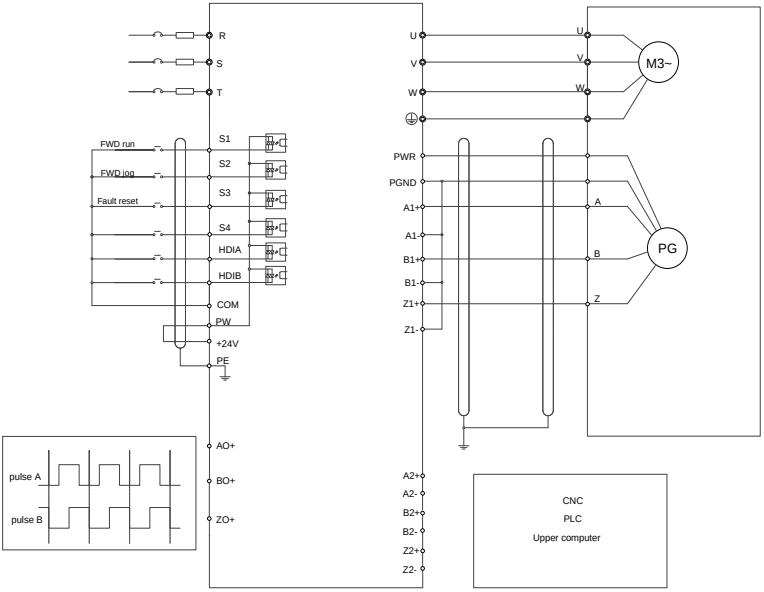

The following figure shows the external wiring of the PG card when it is used in combination with a push-pull encoder.

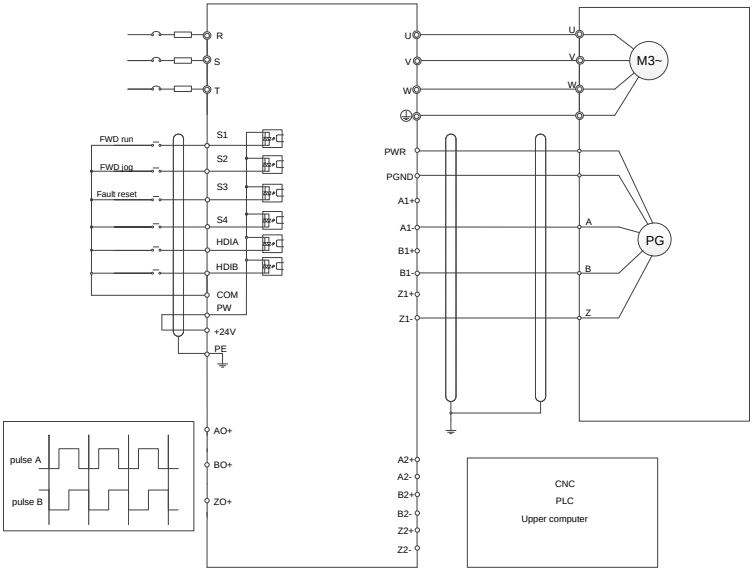

A.7.6 Simplified incremental PG card (EC-PG507-12)

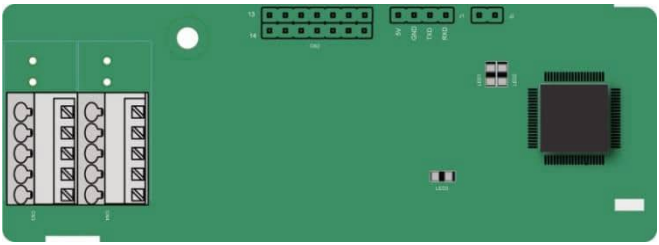

The terminals are arranged as follows:

The DIP switch SW1 is used to set the voltage class (5 V or 12 V) of the power supply of the encoder. The DIP switch can be operated with an auxiliary tool.

PE	A1+	B1+	Z1+	PWR
PGND	A1-	B1-	Z1-	PGND

Indicator definition

Indicator	Name	Description
LED1	State indicator	On: The expansion card is establishing a connection with the control board. Blinking periodically: The expansion card is properly connected to the control board (the period is 1s, on for 0.5s, and off for the other 0.5s). Off: The expansion card is disconnected from the control board.
LED2	Disconnection indicator	Off: A1 or B1 of the encoder is disconnected. On: The encoder pulses are normal.
LED3	Power indicator	On: The control board feeds power to the PG card.

The EC-PG507-12 expansion card can be used in combination with multiple types of incremental encoders through different modes of wiring. The wiring modes of the encoder interfaces are the same as that of the PG card EC-PG505-12.

EC-PG507-12 terminal function description

Signal	Port	Description
PWR	Encoder power	Voltage: 5V/12V ± 5% Max. current: 150 mA The voltage class can be selected through SW1, depending on the encoder voltage class.
PGND		
A1+	Encoder interface	1. Supporting push-pull interfaces of 5 V/12 V 2. Supporting open collector interfaces of 5 V/12 V 3. Supporting differential interfaces of 5 V 4. Response frequency: 400 kHz 5. Supporting the encoder cable length of up to 50 m
A1-		
B1+		
B1-		
Z1+		
Z1-		

A.7.7 24V simplified incremental PG card (EC-PG507-24)

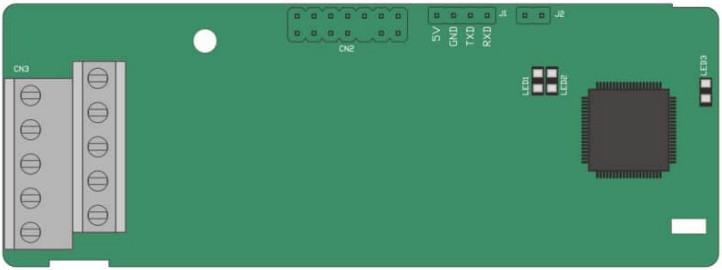

The terminals are arranged as follows:

PE	A1+	B1+	Z1+	PWR
PGND	A1-	B1-	Z1-	PGND

Indicator definition

Indicator	Name	Description
LED1	State indicator	This indicator is on when the expansion card is establishing a connection with the control board; it blinks periodically after the expansion card is properly connected to the control board (the period is 1s, on for 0.5s, and off for the other 0.5s); and it is off when the expansion card is disconnected from the control board.
LED2	Disconnection indicator	Off: A1 or B1 of the encoder is disconnected. On: The encoder pulses are normal.
LED3	Power indicator	This indicator is on after the control board feeds power to the PG card.

EC-PG507-24 can work in combination with multiple types of incremental encoders through various external wiring modes. It is easy to use for the use of 5.08mm pitch terminal.

EC-PG507-24 terminal function description

Signal	Port	Description
PE	Grounding terminal	Connected to the ground to enhance anti-interference performance.
PWR	Encoder power	Voltage: 24V±5%; Max. output current: 150mA (PGND is the ground for power isolation)
PGND		
A1+	Encoder interface	1. Supporting push-pull interfaces of 24 V 2. Supporting open collector interfaces of 24 V 3. Supporting differential interfaces of 24 V 4. Frequency response: 200 kHz 5. Supporting the encoder cable length of up to 100 m
A1-		
B1+		
B1-		
Z1+		
Z1-		

The following figure shows the external wiring of the PG card when it is used in combination with an open collector encoder. A pull-up resistor is configured in the PG card.

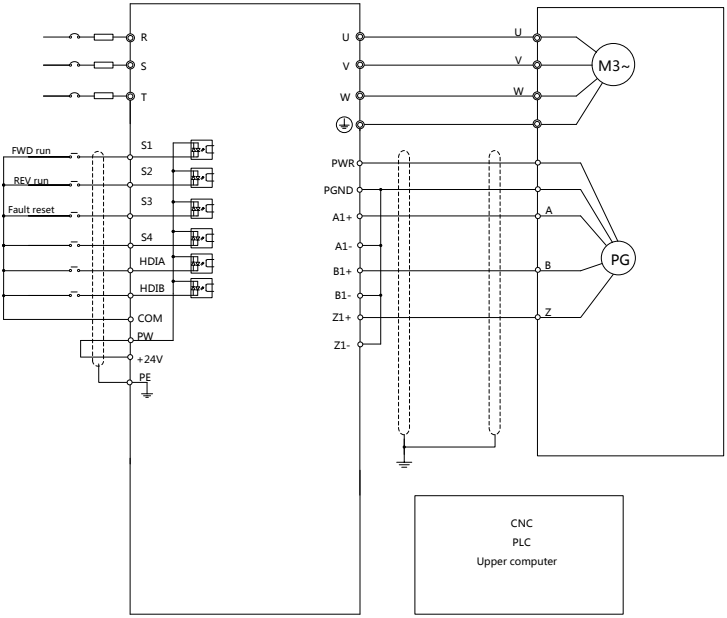

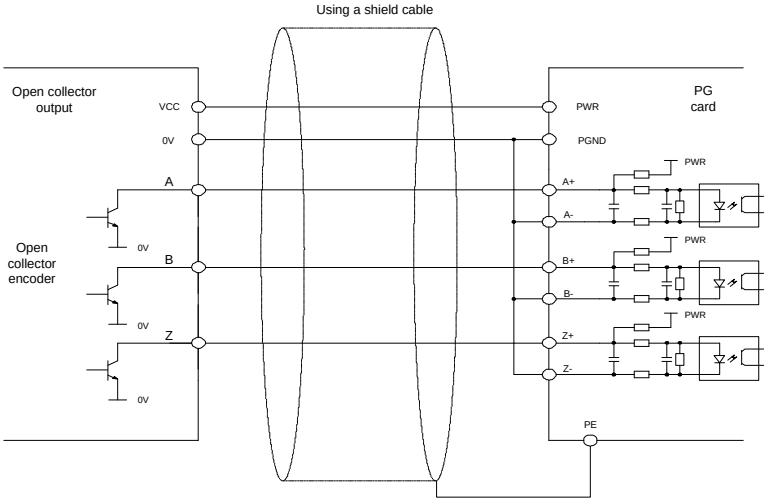

The following figure shows the external wiring of the PG card when it is used in combination with a push-pull encoder.

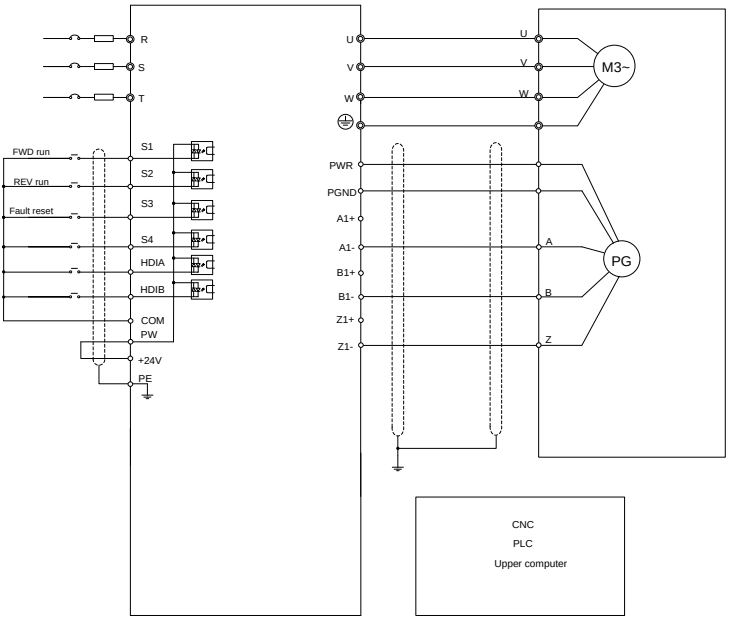
R
S
T
U
V
W
M3~
FWD run
REV run
Fault reset
S1
S2
S3
S4
HDIA
HDIB
COM
PW
+24V
PE
PWR
PGND
A1+
A1-
B1+
B1-
Z1+
Z1-
A
B
Z
PG
CNC
PLC
Upper computer

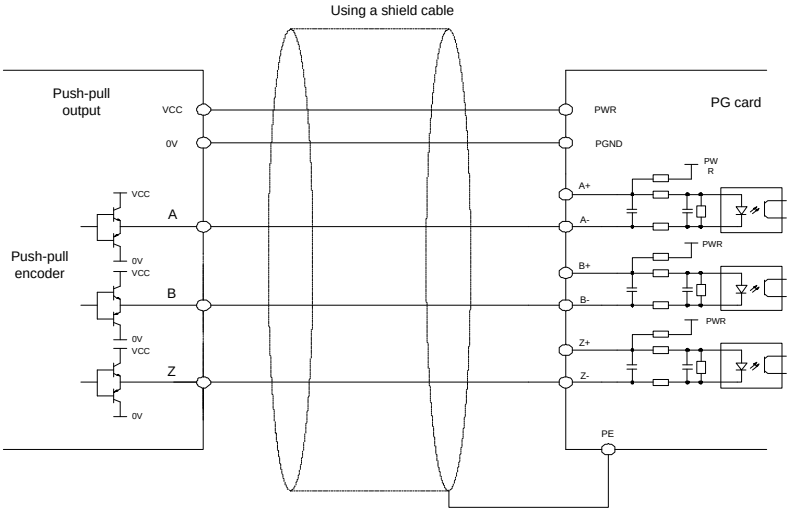
Using a shield cable
Push-pull output
VCC
0V
Push-pull encoder
A
B
Z
PG card
PWR
PGND
A+
A-
B+
B-
Z+
Z-
PE

The following figure shows the external wiring of the PG card when it is used in combination with a differential encoder.

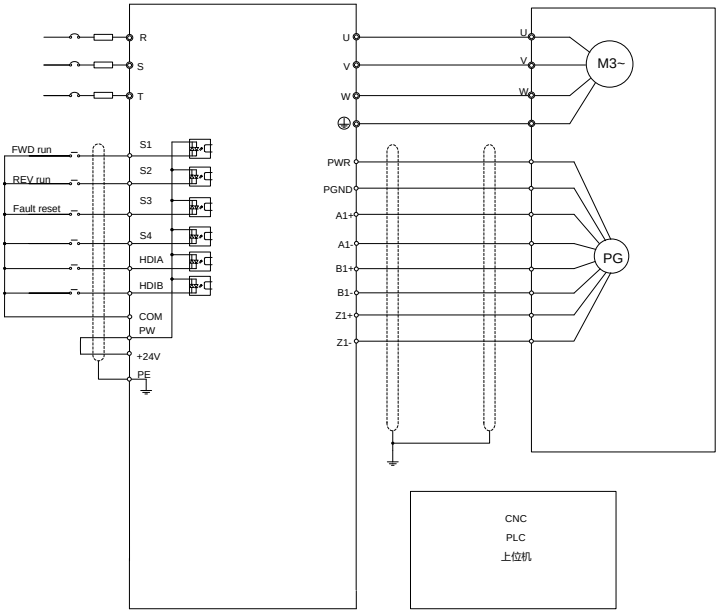

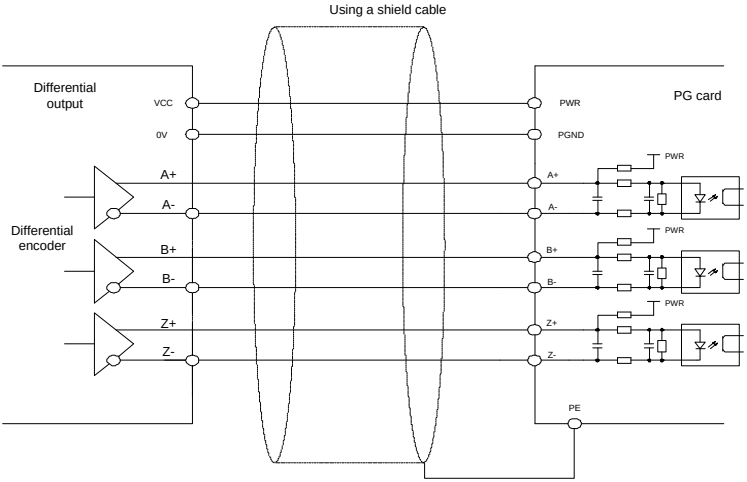

A.8 IoT cards

A.8.1 GPRS card (EC-IC501-2)

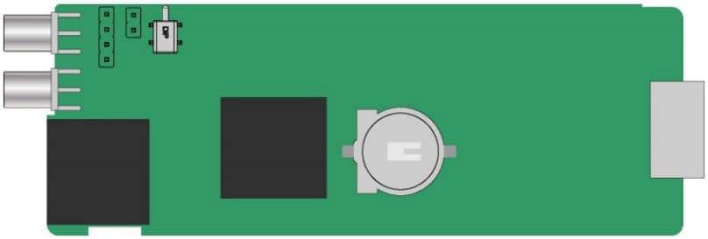

CN6 pin definition

Pin	Name	Description
1	485-	485B
2	485+	485A
3	GND	Power ground
4	24V	24V power

State indicator definition

The GPRS IoT card has five state indicators.

Indicator	Name	Function
LED1	Handshaking indicator	It blinks at a frequency of 1s when the card normally connects to the control board.
LED2	Power indicator	It is on upon power on.
LED3	Run indicator	The card communicates normally.
LED4	GPRS state indicator	When GPRS connects to the network, it blinks fast at a specific interval (with 64ms on and 300ms off); when GPRS does not connect to the network, it blinks slowly at a specific interval (with 64ms on and 800ms off).
LED5	State indicator	It is always on when the GPRS module is powered on.

For details, see the EC series GPRS expansion card manual.

A.8.2 4G card (EC-IC502-2-CN, EC-IC502-2-EU, EC-IC502-2-LA)

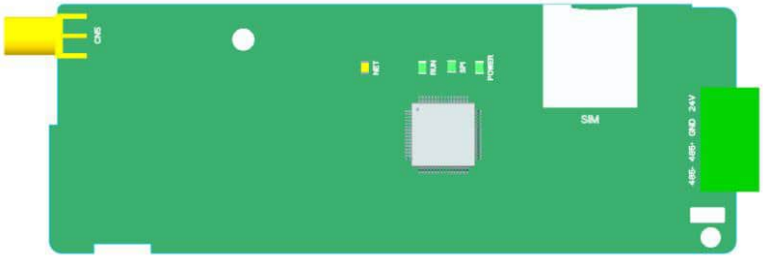

Terminal definition

Terminal	Description
24V	Power supply +
GND	Power supply -
485+	485A
485-	485B
4G	4G antenna
CN3	SIM card tray

Indicator definition

Indicator	Description
NET	Network indicator Blinking slowly (On: 600ms; Off: 600ms): No SIM card/Network registration in progress/Registration failed. Blinking fast (On: 75ms; Off: 75ms): Data link established.
RUN	Running indicator Blinking (On: 1s; Off: 1s): The system runs properly. On or Off: System exceptions happened.
SPI	Handshaking indicator Blinking (On: 1s; Off: 1s): Handshaking between the expansion card and inverter control board is successful. On: Handshaking failed or no handshaking.
POWER	Power supply indicator

Note: For details about the operation, see the *EC Series 4G Expansion Card* Operation Manual.

Appendix B Technical data

B.1 What this chapter contains

This chapter describes the technical data of the Inverter and its compliance to CE and other quality certification systems.

B.2 Derated application

B.2.1 Capacity

Choose an Inverter based on the rated current and power of the motor. To endure the rated power of the motor, the rated output current of the Inverter must be larger or equal to the rated current of the motor. The rated power of the Inverter must be higher or equal to that of the motor.

Note:

1. The maximum allowable shaft power of the motor is limited to 1.5 times the rated power of the motor. If the limit is exceeded, the Inverter automatically restricts the torque and current of the motor. This function effectively protects the input shaft against overload.
2. The rated capacity is the capacity at the ambient temperature of 40°C.
3. You need to check and ensure that the power flowing through the common DC connection in the common DC system does not exceed the rated power of the motor.

B.2.2 Derating

If the ambient temperature on the site where the Inverter is installed exceeds 40°C, the altitude exceeds 1000 m, the heat emission hole coverplate is used, or the carrier frequency is greater than the recommended frequency in the manual (see function code P00.14 for the recommended frequency), the Inverter needs to be derated.

B.2.2.1 Derating due to temperature

When the temperature ranges from +40°C to +50°C, the rated output current is derated by 1% for each increased 1°C. For the actual derating, see the following figure.

Figure B-1 Diagram of actual temperature derating

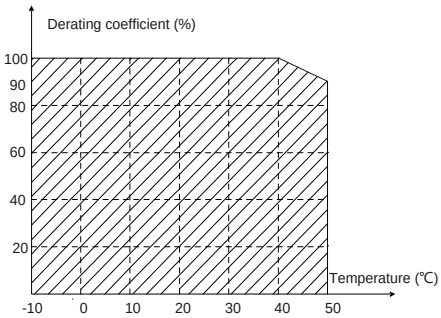

Note: It is not recommended to use the Inverter at a temperature higher than 50°C. In case of violation, we shall bear no liability for the consequences caused.

B.2.2.2 Derating due to altitude

When the installation site altitude is lower than 1000 m, the Inverter can run at the rated power. When the installation site altitude exceeds 1000m, derate 1% for every increase of 100m; when the installation site altitude exceeds 3000m, consult the local HITACHI dealer or office.

B.2.2.3 Derating due to carrier frequency

The power of S1 IP55 high-ingress protection series Inverters varies according to carrier frequencies. The rated power of an inverter is defined based on the carrier frequency set in factory. If the carrier frequency exceeds the factory setting, the power of the Inverter is derated by 10% for each increased 1 kHz.

B.3 Grid specifications

Grid voltage	AC 3PH 380V (-15%)–440V (+10%)
Short-circuit capacity	According to the definition in IEC 61439-1, the maximum allowable short-circuit current at the incoming end is 100kA. Therefore, the Inverter is applicable to scenarios where the transmitted current in the circuit is no larger than 100kA when the Inverter runs at the maximum rated voltage.
Frequency	50/60 Hz±5%, with a maximum change rate of 20%/s

B.4 Motor connection data

Motor type	Asynchronous induction motor or permanent-magnet synchronous motor
Voltage	0–U1 (rated voltage of the motor), 3PH symmetrical, Umax (rated voltage of the Inverter) at the field-weakening point
Short-circuit protection	The short-circuit protection for the motor output meets the requirements of IEC 61800-5-1.
Frequency	0–590 Hz
Frequency resolution	0.01 Hz
Current	See section Rated values.
Power limit	1.5 times the rated power of the motor
Field-weakening point	10–590 Hz
Carrier frequency	Settable among 1kHz to 15kHz. For the default carrier frequency, see the function code P00.14.

B.4.1 EMC compatibility and motor cable length

The following table describes the maximum motor cable lengths that meet the requirements of the EU EMC directive (2014/30/EU).

All models	Maximum motor cable length (m)
Environment category II (C3)	50

You can learn the maximum length of the motor cable through the running parameters of the Inverter. To understand the accurate maximum cable length, contact the local HITACHI office.

For description about the environments categories II (C3), see section B.6 "EMC regulations".

B.5 Application standards

The following table describes the standards that the Inverters comply with.

EN/ISO 13849-1	Safety of machinery—Safety-related parts of control systems—Part 1: General principles for design
IEC/EN 60204-1	Safety of machinery—Electrical equipment of machines. Part 1: General requirements
IEC/EN 62061	Safety of machinery—Safety-related functional safety of electrical, electronic, and programmable electronic control systems
IEC/EN 61800-3	Adjustable speed electrical power drive systems—Part 3:EMC requirements and specific test methods
IEC/EN 61800-5-1	Adjustable speed electrical power drive systems—Part 5-1: Safety requirements—Electrical, thermal and energy
IEC/EN 61800-5-2	Adjustable speed electrical power drive systems—Part 5-2: Safety requirements—Function
GB/T 30844.1	General-purpose variable-frequency adjustable-speed equipment of 1 kV and lower—Part 1: Technical conditions
GB/T 30844.2	General-purpose variable-frequency adjustable-speed equipment of 1 kV and lower—Part 2: Test methods
GB/T 30844.3	General-purpose variable-frequency adjustable-speed equipment of 1 kV and lower—Part 3: Safety regulations

B.5.1 CE marking

The CE marking on the name plate of a Inverter indicates that the Inverter is CE-compliant, meeting the regulations of the European low-voltage directive (2014/35/EU) and EMC directive (2014/30/EU).

B.5.2 EMC compliance declaration

European Union (EU) stipulates that the electric and electrical devices sold in Europe cannot generate electromagnetic disturbance that exceeds the limits stipulated in related standards, and can work properly in environments with certain electromagnetic interference. The EMC product standard (EN 61800-3) describes the EMC standards and specific test methods for adjustable speed electrical power drive systems. Our products have been compliant with these EMC regulations.

B.6 EMC regulations

The EMC product standard (EN 61800-3) describes the EMC requirements on Inverters.

Application environment categories

Category I: Civilian environments, including application scenarios where Inverters are directly connected to the civil power supply low-voltage grids without intermediate transformers

Category II: All environments except those in Category I.

Inverter categories

C1: Rated voltage lower than 1000 V, applied to environments of Category I.

C2: Rated voltage lower than 1000 V, non-plug, socket, or mobile devices; power drive systems that must be installed and operated by specialized personnel when applied to environments of Category I.

Note: The EMC standard IEC/EN 61800-3 no longer restricts the power distribution of Inverters, but it specifies their use, installation, and commissioning. Specialized personnel or organizations must have the necessary skills (including the EMC-related knowledge) for installing and/or performing commissioning on the electrical drive systems.

C3: Rated voltage lower than 1000 V, applied to environments of Category II. They cannot be applied to environments of Category I.

C4: Rated voltage higher than 1000 V, or rated current higher or equal to 400 A, applied to complex systems in environments of Category II.

B.6.1 Inverter category C2

The induction disturbance limit meets the following stipulations:

1. Select the motor and control cables according to the description in the manual.
2. Install the Inverter according to the description in the manual.
3. For the maximum length of the motor cable, see section B.4.1 "EMC compatibility and motor cable length".

	● The Inverter may generate radio interference, and therefore you need to take measures to reduce the interference.

B.6.2 Inverter category C3

The anti-interference performance of the Inverter meets the requirements of environments Category II in the IEC/EN 61800-3 standard.

The induction disturbance limit meets the following stipulations:

1. Select the motor and control cables according to the description in the manual.
2. Install the Inverter according to the description in the manual.
3. For the maximum length of the motor cable, see section B.4.1 "EMC compatibility and motor cable length".

	● Inverters of C3 category cannot be applied to civilian low-voltage common grids. When applied to such grids, the Inverter may generate radio frequency electromagnetic interference.

Appendix C Dimension drawings

C.1 What this chapter contains

This chapter describes the dimension drawings of S1 IP55 high-ingress protection series Inverters. The dimension unit used in the drawings is mm.

C.2 Inverter structure

Figure C-1 Inverter structure diagram

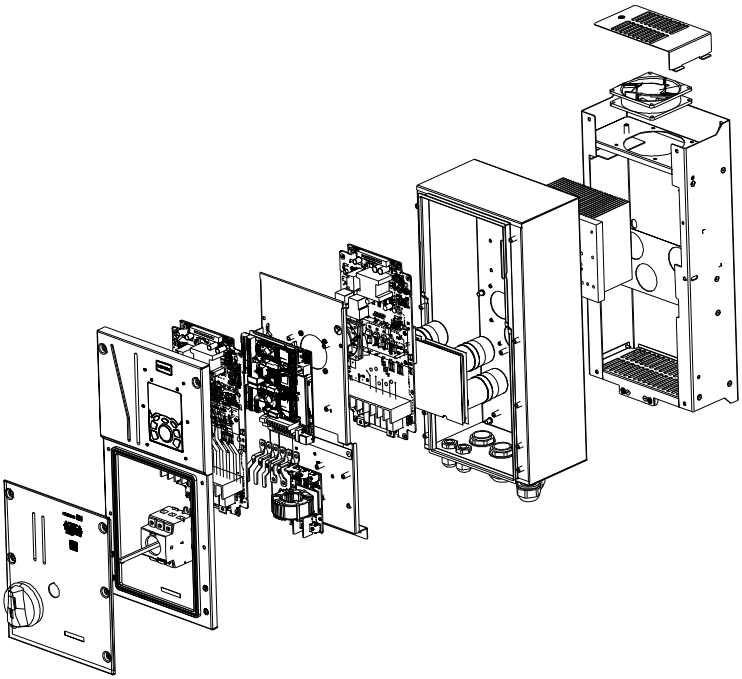

C.3 Dimensions of Inverters

C.3.1 Wall-mounting dimensions

Figure C-2 Wall-mounting diagram of Inverters of 4.0–37kW

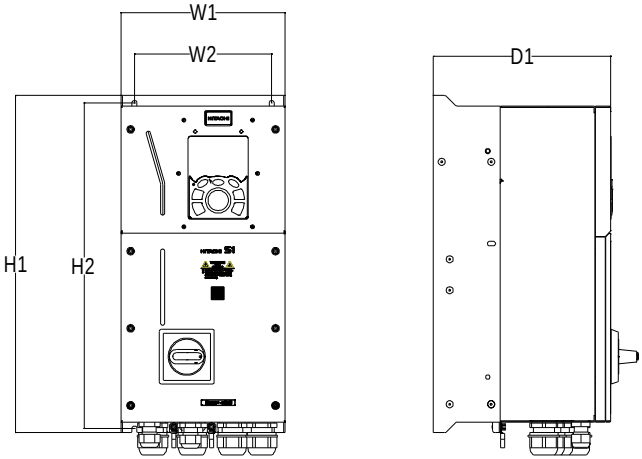

Table C-1 Wall-mounting dimensions of Inverters (unit: mm)

Inverter model	W1	W2	H1	H2	D1	Installation hole diameter	Fixing screw	Net weight (kg)	Gross weight (kg)
S1-00125HFEF-55M	196	164	403	389	227	Ø6	M5	9	11
S1-00170HFEF-55M									
S1-00230HFEF-55M	223	187	475	459	250.7	Ø7	M6	13	16
S1-00320HFEF-55M									
S1-00380HFEF-55M									
S1-00450HFEF-55M	274	234	522	504	246	Ø7	M6	21	24.5
S1-00600HFEF-55M									
S1-00750HFEF-55M	318	263	587	567	242.9	Ø9	M8	27	31
S1-00920HFEF-55M									

Figure C-3 Wall-mounting diagram of Inverters of 45kW–110kW

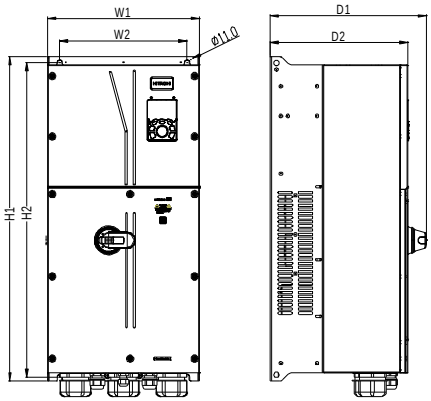

Table C-2 Wall-mounting dimensions of Inverters (unit: mm)

Inverter model	W1	W2	H1	H2	D1	D2	Installation hole diameter	Fixing screw	Net weight (kg)	Gross weight (kg)
S1-01150HFEF-55M	338	283	800	778.5	336.7	289.7	Ø9	M8	48	55
S1-01500HFEF-55M										
S1-01700HFEF-55M	370	310	788	764.5	382	335	Ø11	M10	64	82.8
S1-02150HFEF-55M										
S1-02150HFEF-55MND										

C.3.2 Flange mounting dimensions

Figure C-4 Flange mounting diagram of Inverters of 4.0–37kW

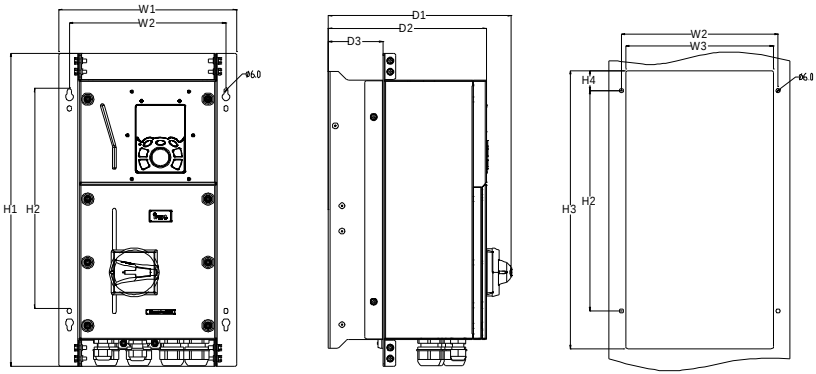

Table C-3 Flange mounting dimensions of Inverters (unit: mm)

Inverter model	W1	W2	W3	H1	H2	H3	H4	D1	D2	D3	Installation hole diameter	Fixing screw
S1-00125HFEF-55M	255.5	225	212	456	321	405	29	262.8	227	78.5	Ø6	M5
S1-00170HFEF-55M												
S1-00230HFEF-55M	282.5	258.5	239	520	333.5	477	58.5	289.4	250.7	100.5	Ø7	M6
S1-00320HFEF-55M												
S1-00380HFEF-55M												
S1-00450HFEF-55M	346	310.5	291	560	371.5	524	63	281.8	246	100.5	Ø7	M6
S1-00600HFEF-55M												
S1-00750HFEF-55M	382	354	336	624	457	589	49.5	290	242.9	101.5	Ø9	M8
S1-00920HFEF-55M												

Figure C-5 Flange mounting diagram of Inverters of 45kW–55kW

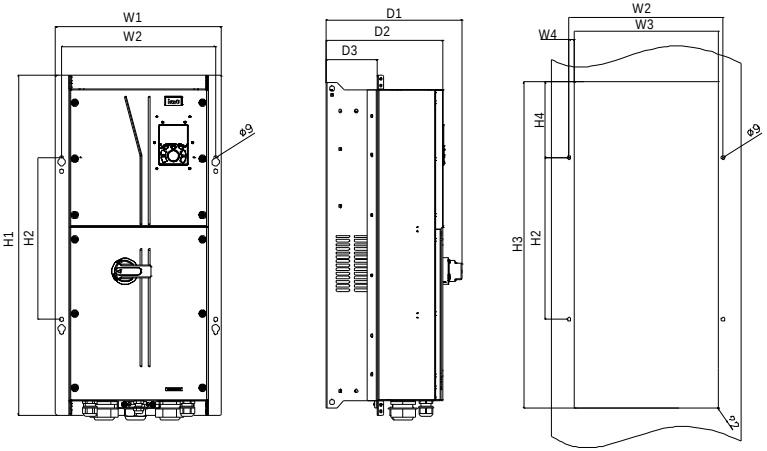

Table C-4 Flange mounting dimensions of Inverters of 045G/055P–055G/075P (unit: mm)

Inverter model	W1	W2	W3	W4	H1	H2	H3	H4	D1	D2	D3	Installation hole diameter	Fixing screw
S1-01150HFEF-55M	410	380	355.6	12.2	834	397	802	186	336.7	289.7	126.5	Ø9	M8
S1-01500HFEF-55M													

Appendix D Wiring guide

D.1 Cables

D.1.1 Power cables

The sizes of the input power cables and motor cables must meet the local regulation.

- The input power cables and motor cables must be able to carry the corresponding load currents.
- The maximum temperature margin of the motor cables in continuous operation cannot be lower than 70°C.
- The conductivity of the PE grounding conductor is the same as that of the phase conductor. For models higher than 30 kW, the cross sectional area of the PE grounding conductor can be slightly less than the recommended area.
- For details about the EMC requirements, see Appendix B "Technical data".

To meet the EMC requirements stipulated in the CE standards, you must use symmetrical shielded cables as motor cables (as shown in the following figure).

Four-core cables can be used as input cables, but symmetrical shielded cables are recommended. Compared with four-core cables, symmetrical shielded cables can reduce electromagnetic radiation as well as the current and loss of the motor cables.

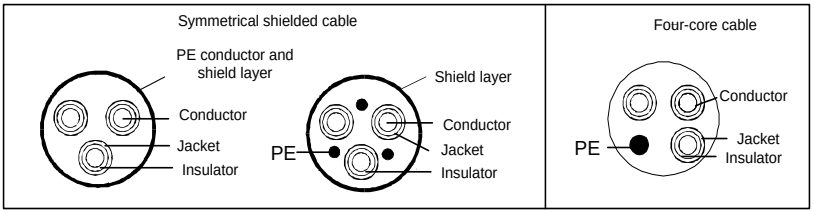

Note: If the conductivity of the shield layer of the motor cables cannot meet the requirements, separate PE conductors must be used.

To protect the conductors, the cross-sectional area of the shielded cables must be the same as that of the phase conductors if the cable and conductor are made of materials of the same type. This reduces grounding resistance, and thus improves impedance continuity.

To effectively restrict the emission and conduction of radio frequency (RF) interference, the conductivity of the shielded cable must at least be 1/10 of the conductivity of the phase conductor. This requirement can be well met by a copper or aluminium shield layer. The following figure shows the minimum requirement on motor cables of a Inverter. The cable must consist of a layer of spiral-shaped copper strips. The denser the shield layer is, the more effectively the electromagnetic interference is restricted.

Figure D-1 Cross-section of the cable

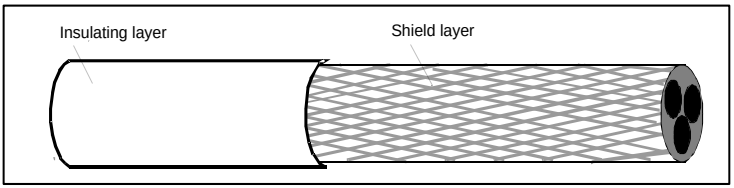

D.1.2 Control cables

All analog control cables and cables used for frequency input must be shielded cables. Analog signal cables need to be double-shielded twisted-pair cables (as shown in figure a). Use one separate shielded twisted pair for each signal. Do not use the same ground wire for different analog signals.

Figure D-2 Power cable arrangement

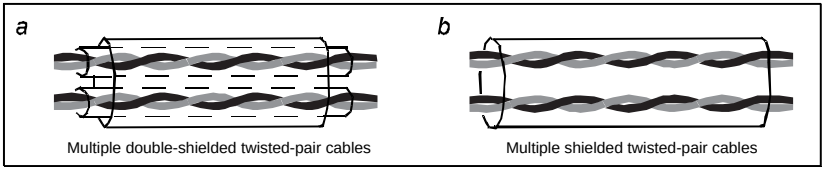

For low-voltage digital signals, double-shielded cables are recommended, but shielded or unshielded twisted pairs (as shown in figure b) also can be used. For frequency signals, however, only shielded cables can be used.

Relay cables need to be those with metal braided shield layers.

Keypads need to be connected by using network cables. In complicated electromagnetic environments, shielded network cables are recommended.

Note: Analog signals and digital signals cannot use the same cables, and their cables must be arranged separately.

Do not perform any voltage endurance or insulation resistance tests, such as high-voltage insulation tests or using a megameter to measure the insulation resistance, on the Inverter or its components. Insulation and voltage endurance tests have been performed between the main circuit and chassis of each Inverter before delivery. In addition, voltage limiting circuits that can automatically cut off the test voltage are configured inside the Inverters.

Note: Check the insulation conditions of the input power cable of a Inverter according to the local regulations before connecting it.

Table D-1 Recommended cable dimensions

Inverter model	Recommended cable size (mm^2)		Screw	
	R,S,T,U,V,W	PE	Terminal screw	Fastening torque (Nm)
S1-00125HFEF-55M	3×1.5/3×2.5	1.5/2.5	M4	1.2–5
S1-00170HFEF-55M	3×2.5/3×4	2.5/4		
S1-00230HFEF-55M	3×4/3×6	4/6	M5	2.3

Inverter model	Recommended cable size (mm^2)		Screw	
	R,S,T,U,V,W	PE	Terminal screw	Fastening torque (Nm)
S1-00320HFEF-55M	3×6/3×10	6/10		
S1-00380HFEF-55M	3×10/3×10	10/10	M5	2.3
S1-00450HFEF-55M	3×10/3×16	10/16	M5	2.3
S1-00600HFEF-55M	3×16/3×16	16/16		
S1-00750HFEF-55M	3×16/3×25	16/16	M6	2.5
S1-00920HFEF-55M	3×25/3×35	16/16		
S1-01150HFEF-55M	3×35/3×50	16/25	M8	10
S1-01500HFEF-55M	3×50/3×70	25/35		
S1-01700HFEF-55M	3×70/3×95	35/50	M12	35
S1-02150HFEF-55M	3×95/3×120	50/70		
S1-02150HFEF-55MND	3×120	70		

Note:

1. The numbers on the left and right of "/" indicate the recommended device parameters for normal duty and low duty operation mode, respectively.
2. Cables of the sizes recommended for the main circuit can be used in scenarios where the ambient temperature is lower than 40°C, the wiring distance is shorter than 100 m, and the current is the rated current.
3. The terminals P1, (+), and (-) are used to connect to brake accessories.

Table D-2 Recommended terminal model

Inverter model	Recommended copper tube terminal					
	R,S,T	Terminal screw specifica-tion	U,V,W	Terminal screw specifica-tion	PE	Terminal screw specifica-tion
S1-00125HFEF-55M	DBN1.25-14/ DBN2-14	/	GTNR1.25-4/ GTNR2.5-4	M4	GTNR1.25-4/ GTNR1.25-4	M4
S1-00170HFEF-55M	DBN2-14/ DBN5.5-14		GTNR2.5-4/ GTNR4-4		GTNR2.5-4/ GTNR4-4	
S1-00230HFEF-55M	DBN5.5-14/ DBN5.5-14	/	GTNR4-4/ GTNR6-4	M6	GTNR4-4/ GTNR6-4	M4
S1-00320HFEF-55M	DBN5.5-14/ DBN8-14		GTNR6-4/ GTNR10-4		GTNR6-4/ GTNR10-4	
S1-00380HFEF-55M	DBN8-14/ DBN8-14		GTNR10-4/ GTNR10-4		GTNR10-4/ GTNR10-4	
S1-00450HFEF-55M	DBN8-14/ DBN14-16	/	GTNR10-5/ GTNR16-5	M6	GTNR10-5/ GTNR16-5	M5
S1-00600HFEF-55M	DBN14-16/ DBN14-16		GTNR16-5/ GTNR16-5		GTNR16-5/ GTNR16-5	
S1-00750HFEF-55M	DBN14-16/ DBN22-16	/	GTNR16-5/ GTNR25-5	M6	GTNR16-5/ GTNR16-5	M5
S1-00920HFEF-55M	DBN22-16/ DBN38-16		GTNR25-5/ GTNR35-5		GTNR16-5/ GTNR16-5	

Inverter model	Recommended copper tube terminal					
	R,S,T	Terminal screw specifica-tion	U,V,W	Terminal screw specifica-tion	PE	Terminal screw specifica-tion
S1-01150HFEF-55M	GTNR35-8/ GTNR50-8	M8	GTNR35-8/ GTNR50-8	M8	GTNR16-8/ GTNR25-8	M6
S1-01500HFEF-55M	GTNR50-8/ GTNR70-8		GTNR50-8/ GTNR70-8		GTNR25-8/ GTNR35-8	
S1-01700HFEF-55M	GTNR70-12/ GTNR95-12	M12	GTNR70-12/ GTNR95-12	M12	GTNR35-8/ GTNR50-8	M8
S1-02150HFEF-55M	GTNR95-12/ GTNR120-12		GTNR95-12/ GTNR120-12		GTNR50-8/ GTNR70-8	
S1-02150HFEF-55M ND	GTNR120-12		GTNR120-12		GTNR70-8	

Figure D-3 Terminal drawing

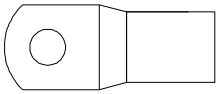

GTNR series terminal

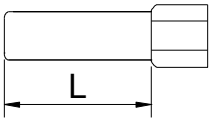

DBN series terminal

DBN1.25-14	DBN2-14	DBN5.5-14	DBN8-14	DBN14-16	DBN22-16	DBN38-16
L=14mm				L=16mm		

Table D-3 Recommended terminal model and torque

Inverter model	R,S,T		U,V,W		PE	
	Terminal screw specifica-tion	Tightening torque (Nm)	Terminal screw specifica-tion	Tightening torque (Nm)	Terminal screw specifica-tion	Tightening torque (Nm)
S1-00125HFEF-55M	/	0.8	M4	1.2	M4	1.2
S1-00170HFEF-55M						
S1-00230HFEF-55M	/	2.0	M6	2.0	M4	1.2
S1-00320HFEF-55M						
S1-00380HFEF-55M						
S1-00450HFEF-55M	/	2.0	M6	2.0	M5	2.5
S1-00600HFEF-55M						
S1-00750HFEF-55M	/	6.0	M6	2.0	M5	2.5
S1-00920HFEF-55M						
S1-01150HFEF-55M	M8	4.0	M8	4.0	M6	4.0
S1-01500HFEF-55M						
S1-01700HFEF-55M	M12	35	M12	35	M8	10
S1-02150HFEF-55M						
S1-02150HFEF-55MND						

D.1.3 Cable arrangement

Motor cables must be arranged away from other cables. The motor cables of several Inverters can be arranged in parallel. It is recommended that you arrange the motor cables, input power cables, and control cables separately in different trays. The output dU/dt of the Inverters may increase electromagnetic interference on other cables. Do not arrange other cables and the motor cables in parallel.

If a control cable and power cable must cross each other, ensure that the angle between them is 90 degrees.

The cable trays must be connected properly and well grounded. Aluminum trays can implement local equipotential.

The following figure shows the cable arrangement distance requirements.

Figure D-4 Cable arrangement distance

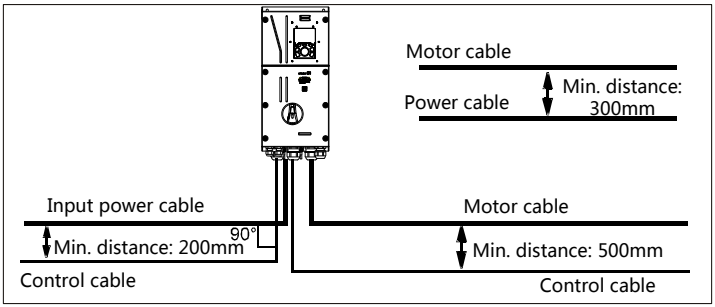

D.1.4 Insulation inspection

Check the motor and the insulation conditions of the motor cable before running the motor.

1. Ensure that the motor cable is connected to the motor, and then remove the motor cable from the U, V, and W output terminals of the Inverter.
2. Use a megameter of 500 V DC to measure the insulation resistance between each phase conductor and the protection grounding conductor. For details about the insulation resistance of the motor, see the description provided by the manufacturer.

Note: The insulation resistance is reduced if it is damp inside the motor. If it may be damp, you need to dry the motor and then measure the insulation resistance again.

D.2 Breaker and electromagnetic contactor

You need to add a fuse to prevent overload.

You need to configure a manually manipulated molded case circuit breaker (MCCB) between the AC power supply and Inverter. The breaker must be locked in the open state to facilitate installation and inspection. The capacity of the breaker needs to be 1.5 to 2 times the Inverter rated input current.

⚠	According to the working principle and structure of breakers, if the manufacturer's regulation is not followed, hot ionized gases may escape from the breaker enclosure when short-circuit occurs. To ensure safe use, exercise extra caution when installing and placing the breaker. Follow the manufacturer's instructions.

To ensure safety, you can configure an electromagnetic contactor on the input side to control the switch-on and switch-off of the main circuit power, so that the input power supply of the Inverter can be effectively cut off when a system fault occurs.

Table D-4 Parameters of the optional accessories

Inverter model	Breaker rated current (A)	Fast-acting fuse rated current (A)	Contactor rated current (A)
S1-00125HFEF-55M	20/25	20/35	18/25
S1-00170HFEF-55M	25/32	35/40	25/32
S1-00230HFEF-55M	32/50	40/50	32/38
S1-00320HFEF-55M	50/63	50/60	38/50
S1-00380HFEF-55M	63/63	60/70	50/65
S1-00450HFEF-55M	63/80	70/90	65/80
S1-00600HFEF-55M	80/100	90/125	80/80
S1-00750HFEF-55M	100/125	125/125	80/98
S1-00920HFEF-55M	125/140	125/150	98/115
S1-01150HFEF-55M	140/180	150/200	115/150
S1-01500HFEF-55M	180/225	200/250	150/185
S1-01700HFEF-55M	225/250	250/300	185/225
S1-02150HFEF-55M	250/315	300/350	225/265
S1-02150HFEF-55MND	315/400	350/400	265/330

Note: Parameters of the optional accessories described in the preceding table are ideal values. You can select accessories based on the actual market conditions, but try not to use those with lower values.

Appendix E STO function description

Reference standards: IEC 61508-1, IEC 61508-2, IEC 61508-3, IEC 61508-4, IEC 62061, ISO 13849-1, and IEC 61800-5-2.

You can enable the safe torque off (STO) function to prevent unexpected startups when the main power supply of the drive is not switched off. The STO function switches off the drive output by turning off the drive signals to prevent unexpected startups of the motor (see the following figure). After the STO function is enabled, you can perform some-time operations (such as non-electrical cleaning in the lathe industry) and maintain the non-electrical components of the device without switching off the drive.

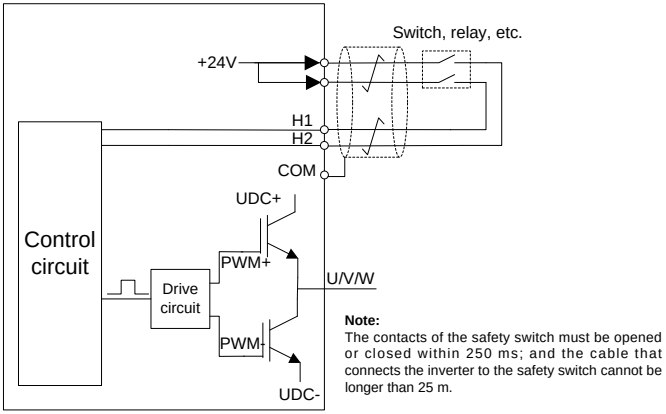

E.1 STO function logic table

The following table describes the input states and corresponding faults of the STO function.

STO input state	Corresponding fault
H1 and H2 opened simultaneously	The STO function is triggered, and the drive stops running. Fault code: 40: Safe torque off (STO)
H1 and H2 closed simultaneously	The STOP function is not triggered, and the drive runs properly.
One of H1 and H2 opened, and the other closed	The STL1, STL2, or STL3 fault occurs. Fault code: 41: Channel H1 exception (STL1) 42: Channel H2 exception (STL2) 43: Channel H1 and H2 exceptions (STL3)

E.2 STO channel delay description

The following table describes the trigger and indication delay of the STO channels.

STO mode	STO trigger delay[1] and indication delay[2]
STO fault: STL1	Trigger delay < 10 ms Indication delay < 280 ms

STO mode	STO trigger delay[1] and indication delay[2]
STO fault: STL2	Trigger delay < 10 ms Indication delay < 280 ms
STO fault: STL3	Trigger delay < 10 ms Indication delay < 280 ms
STO fault: STO	Trigger delay < 10 ms Indication delay < 100 ms

1. STO function trigger delay: Time interval between trigger the STO function and switching off the drive output
2. STO indication delay: Time interval between trigger the STO function and STO output state indication

E.3 STO function installation checklist

Before installing the STO, check the items described in the following table to ensure that the STO function can be properly used.

	Item
☐	Ensure that the drive can be run or stopped randomly during commissioning.
☐	Stop the drive (if it is running), disconnect the input power supply, and isolate the drive from the power cable through the switch.
☐	Check the STO circuit connection according to the circuit diagram.
☐	Check whether the shielding layer of the STO input cable is connected to the +24 V reference ground COM.
☐	Connect the power supply.
☐	Test the STO function as follows after the motor stops running: ● If the drive is running, send a stop command to it and wait until the shaft of the motor stops rotating. ● Activate the STO circuit and send a start command to the drive. Ensure that the motor does not start. ● Deactivate the STO circuit.
☐	Restart the drive, and check whether the motor is running properly.
☐	Test the STO function as follows when the motor is running: ● Start the drive. Ensure that the motor is running properly. ● Activate the STO circuit. ● The drive reports an STO fault (for details, see section 5.5.19 "Fault handling"). Ensure that the motor coasts to stop rotating. ● Deactivate the STO circuit.
☐	Restart the drive, and check whether the motor is running properly.

Appendix F Acronyms and abbreviations

This chapter describes the terms or words corresponding to the acronyms and abbreviations that may be displayed on the interfaces of the keypad.

Term/word	Acronym/ abbreviation	Term/word	Acronym/ abbreviation
Accumulated/ accumulation	Accum	Inverter	Inv
Address	Addr	Leakage	Lkge
Amplitude	Amp	Lower limit	LowLim
Bridge	Brdg	Low-frequency	LwFreq
Coefficicent	Coeff	Low-speed	LwSp
Combination	Comb	Master/slave	M/S
Command	Cmd	Operation/operate/operator	Oper
Communication	Comm	Output	Outp
Compensation	Comp	Parameter	Param
Component	Cmpt	Password	Pwd
Consumption	Consume	Position	Pos
Control	Ctrl	Power	Pwr
Current	Cur	Proportional	Prop
Detection/detect	Det	Protect/protection	Prot
Differential	Diff	Quantity	Qty
Digital	Digi	Reference	Ref
Display	Disp	Resistance	Resis
Dynamic	Dyn	Reverse	REV
Eelectromotive force	Emf	Saturation	Satur
Emergency	Emer	Short-circuit	S/C
Error	Err	Source	Src
Factor	Fac	Speed	Spd
Feedback	Fdbk	Spindle	Spdl
Filter/filtering	Filt	Switch	Swt
Forward	FWD	System	SYS
Frequency	Freq	Temperature	Temp
Frequency point	FreqPnt	Terminal	Trml
Friction	Frict	Threshold	Thr
High-speed	HiSp	Torque	Trq
Identification/identity	ID	Upper limit	UpLim
Inductance	Ind	Value	Val
Initial	Init	Version	Ver
Input	Inp	Vibration	Vib
Instance	Inst	Voltage	Volt
Integral	Intg	Voltage point	VoltPnt
Interval	Intvl		

Appendix G Energy efficiency data

Table G-1 Power losses and IE class

Model	Relative loss (%)								Standby loss (w)	IE class
	(0;25)	(0;50)	(0;100)	(50;25)	(50;50)	(50;100)	(90;50)	(90;100)		
S1-00125HFEF-55M	1.52	1.76	2.33	1.50	1.77	2.36	1.70	2.44	6	IE2
S1-00170HFEF-55M	0.94	1.27	2.07	1.01	1.38	2.33	1.53	2.60	8	IE2
S1-00230HFEF-55M	0.76	0.96	1.53	0.75	0.97	1.60	0.98	1.75	10	IE2
S1-00320HFEF-55M	0.61	0.84	1.55	0.61	1.04	1.97	0.99	2.16	10	IE2
S1-00380HFEF-55M	0.56	0.78	1.42	0.56	0.78	1.46	0.80	1.60	10	IE2
S1-00450HFEF-55M	0.51	0.70	1.26	0.52	0.74	1.38	0.71	1.36	14	IE2
S1-00600HFEF-55M	0.58	0.80	1.37	0.64	0.87	1.59	0.94	1.71	11	IE2
S1-00750HFEF-55M	0.53	0.68	1.32	0.64	0.73	1.54	0.83	1.65	14	IE2
S1-00920HFEF-55M	1.02	1.24	1.92	1.10	1.38	2.16	1.49	2.37	20	IE2
S1-01150HFEF-55M	0.92	1.12	2.02	1.03	1.26	1.86	1.38	1.95	21	IE2
S1-01500HFEF-55M	0.53	0.73	1.38	0.61	0.83	1.47	0.88	1.47	21	IE2
S1-01700HFEF-55M	0.44	0.61	1.12	0.51	0.69	1.29	0.76	1.42	22	IE2
S1-02150HFEF-55M	0.42	0.59	1.15	0.47	0.65	1.29	0.90	1.48	25	IE2
S1-02150HFEF-55MND	0.66	0.86	1.53	0.79	1.01	1.77	1.12	1.93	28	IE2

Table G-2 Rated specifications

Model	Apparent power (kVA)	Rated output power (kW)	Rated output current (A)	Max. working temperature (°C)	Rated power frequency (Hz)	Rated power voltage (V)
S1-00125HFEF-55M	6.2	4	9.5	50°C Dderate 1% for every increase of 1°C if the temperature exceeds 40°C	50Hz/60Hz Allowed range: 47-63Hz	3PH 380V
S1-00170HFEF-55M	9.2	5.5	14			
S1-00230HFEF-55M	12.2	7.5	18.5			
S1-00320HFEF-55M	16.4	11	25			
S1-00380HFEF-55M	21.0	15	32			
S1-00450HFEF-55M	25.0	18.5	38			
S1-00600HFEF-55M	29.6	22	45			
S1-00750HFEF-55M	39.4	30	60			
S1-00920HFEF-55M	49.3	37	75			
S1-01150HFEF-55M	60.5	45	92			
S1-01500HFEF-55M	75.7	55	115			
S1-01700HFEF-55M	98.7	75	150			
S1-02150HFEF-55M	118.5	90	180			
S1-02150HFEF-55MND	141.5	110	215			

Appendix H Further information

H.1 Product and service queries

Should you have any queries about the product, contact the local HITACHI office. Provide the model and serial number of the product you query about. You can visit www.hitachi-industrial.eu to find a list of HITACHI offices.

H.2 Feedback on HITACHI Inverter manuals

Your comments on our manuals are welcome. Visit www.hitachi-industrial.eu, directly contact online service personnel or choose **Contact Us** to obtain contact information.

H.3 Documents on the Internet

You can find manuals and other product documents in the PDF format on the Internet. Visit www.hitachi-industrial.eu.

HITACHI

Inspire the Next

Hitachi Europe GmbH, Niederkasseler Lohweg 191, D-40547 Düsseldorf
Phone: +49 (0) 211-5283-0
www.hitachi-industrial.eu, automation.industrial@hitachi-eu.com

All company and product names in this basic guide
are the property of the respective companies.

BG-S1-IP55-03 / 21EN