HITACHI

WJ SERIES

Read this "User's Guide", and keep it handy for future reference.

# User's Guide

# HITACHI Inverter

## WJ Series C1
for Basic Mode

Mandatory

Introduction/Cautions

Contents

1 Safety Instructions/Risks

2 Outline of This User's Guide/ Procedure for Operation

3 Main Body of the Product

4 Installation

5 Wire Connection

6 Operation Check/Residual Risk

7 Keypad and Related Functions

8 Mandatory setting for Motor Drive and Test Run

Necessary

9 Inverter Functions

10 Monitor Functions

11 RS485 Communication

12 ProDriveNext/EzSQ

13 Option Board

14 Safety Function STO

Check

15 Tips/FAQ/Troubleshooting

16 Maintenance and Inspection

17 Specifications/Dimensions/Derating

Reference

18 List of Parameters/Modbus Coil/ Register Numbers

Appendix
Replacement from WJ200


NT361AX

# S.1 Introduction

Thank you for purchasing Hitachi WJ Series C1 Inverter. (Afterward "Hitachi WJ Series C1 Inverter" referred to as WJ-C1.)
This is a User's Guide that describes the handling and maintenance of the WJ-C1 Ver.1.00 and the basic mode for Ver.2.00 and later.
For the purpose of paper consumption reduction and provision of the latest information, we enclose the WJ-C1 Basic Guide only, while providing the WJ-C1 User's Guide (this Guide) for more detailed description through electronic means instead of CD or a printed document.

## About the Basic Guide (Bundled with product)

- The WJ-C1 Basic Guide provides the minimum information necessary for handling the product. Be sure to read this document as well as the WJ-C1 User's Guide for more detailed information.

## About the User's Guide (This document)

- The WJ-C1 User's Guide provides detailed information necessary for handling the product. Be sure to read the User's Guide for proper use.
  If there are any differences between the WJ-C1 Basic Guide and the WJ-C1 User's Guide due to updates, etc., the contents on the Guide with the latest version will have higher priority. The version of the Guide is shown in underlined alphabet like the following example, and the alphabet changes to A, B, C... by the revision. For example, comparing the User's Guide NT361AX and the Basic Guide NT3611BX, the Basic Guide contains the latest contents. Always use the WJ-C1 inverter strictly within the range described in the latest contents on the Guide and perform proper inspection and maintenance to prevent failures or accidents.

  Please note that the WJ-C1 User's Guide basically provided as electronic data (such as PDF).
  To get the latest version of the WJ-C1 User's Guide, please contact the supplier where this device was purchased.

## Handling an Optional Products

- When using optional products, refer to the instruction manual, Basic Guide, User's Guide, and other related technical documents attached to the product.
- When using communication option boards with WJ-C1, refer to "Chapter 13 Option Board".

# S.2 Cautions

## For a Proper Use

- Before using the inverter, carefully read the Basic Guide, User's Guide of the inverter and the instruction manuals for optional products.
- Before any attempt to install, operate, maintain or inspect this equipment, a complete understanding of the equipment specifications, safety instructions, precautions, handling and operation instructions is required. Follow all the specifications and instructions for a proper use. Additionally, review the inverter's Basic Guide, User's Guide and each optional product instruction manuals periodically.

## Precautions

- It is prohibited to reproduce or reform this Guide partially or totally in any form without the publisher's permission.
- The contents of this Guide are subject to change without prior notice.
- Any handling, maintenance or operation method NOT described on the inverter's Basic Guide, User's Guide and each optional product instruction manuals is not covered by the product warranty. DO NOT perform any procedure NOT described on the WJ-C1 and optional product guides since it can be the cause of unexpected failures or accidents.
- We are not responsible for any impact from operations regardless of unexpected failure or accident due to operation or handling of the product in a manner not specified on the inverter's Basic Guide, User's Guide and each optional product instruction manuals. We appreciate your understanding.
- If you find any unclear or incorrect description, missing description, or misplaced or missing pages, please inform the Hitachi inverter technical service office or the supplier where this device was purchased.
- Note that, in case the inverter's Basic Guide, User's Guide and each optional product instruction manuals are enclosed, they should be delivered to the end user of the inverter. For detailed information, please contact the supplier where this device was purchased.

# S.3 Product Warranty and Inquiry

## About Product Inquiry

- For an inquiry about product damage or faults or a question about the product, notify your supplier or Hitachi inverter technical service office with the following information.

  - Model: The model code start with C1- on the specification label.
  - Manufacturing Number (MFG No.): Described on the specification label.
  - Date of purchase: Purchase date by customer.
  - Inquiry contents:
    - Inform the defective point and its condition.
    - Inform the suspicious content and its detail.

## Product Warranty

- The product WJ-C1 will be warranted by Hitachi Industrial Equipment Systems Co., Ltd. (afterwards referred as "Hitachi")
- However, the warranty expressed here is covered only for products delivered from Hitachi, and will not be responsible for others damage or loss of products like a motor or any equipment or systems damage caused by improper usage of the product. We recommend applying safety design which is able to provide a hazard notice to the user in case of malfunction or damage of the delivered product to minimize the consequences on other equipment or system. We advise that the selection of the delivered product is done with sufficient margin for performance, as well as using redundant design for other equipment or systems. Also, the compatibility of the product with the customer's intended use is not warranted, hence the customer has the responsibility to perform validation tests before any operation.
- In case a defective product is delivered, or quality failure during the manufacturing process are detected, Hitachi will repair or exchange the product free of charge, only during the product warranty period (afterward, we call "warranty service").
- The product will be warranted for one year from the date of purchase. However, depending on the case, actual expenses for sending technical assistance will be charged to the customer. Also, Hitachi will not be responsible of any readjustment or testing on site.
- Warranty period for repaired or replaced part based on a warranty service is 6 months after the repair is completed for the relevant part. Hitachi will be responsible for repairing or exchanging the previously exchanged or repaired part only during this warranty period.
- In order to receive warranty service, you should present the receipt issued by the product supplier or any other document that allow us to check the purchase date. However, any defects, damage, malfunction or any other failure caused by one of the following facts will not be covered by warranty service.
  (1) The purchase date cannot be confirmed.
  (2) The damage or fault resulted from improper usage or inadequate handling of the product or usage that does not comply with the instructions described in the User's Guide or Basic Guide.
  (3) Incorrect usage of the product and/or the inverter, inadequate setting of the product and/or the inverter, remodeling or inadequate repair or repair carried out by an unqualified repair center.
  (4) Deterioration and wear as result of normal operation.
  (5) Fault resulted from natural disaster, such as earthquake, fire disaster, lightning strike, pollution, salt pollution, or abnormal voltage or any others external factors.
  (6) Shock, falling, or Vibration resulted during transportation or displacement after purchase.
  (7) Damage or fault resulted from remodeling firmware by unqualified personal not belonging to Hitachi.
  (8) Damage or fault resulted from using a program operation function (EzSQ).
- By warranty service, it is very likely that parameters and customer created EzSQ program data will be lost. Be sure to back up by own responsibility. However, in case of malfunction resulting from the circuit board of the storage devices, the backup will not be possible. It is recommended to keep a backup during the testing phase by using keypad WOP or Inverter configuration software (ProDriveNext).

## Liability Limitation

- In this product warranty, all warranties offered to the customer are stipulated, and neither Hitachi, affiliated companies nor related dealers are liable to any express warranties or implied warranties including, but not limited to, product merchantability or specific application fitness.
- Also, Hitachi, affiliated companies or related dealers are not responsible of any incidental damage, special damage, direct loss, or indirect loss (even predictable or not) sustained by the customer as a result of a faulty product.

## Using the Warranty Service

- The customer can receive a warranty service during the warranty period from the product supplier or local Hitachi inverter sales office, if the product does not meet the specifications described in the latest User's or Basic Guide.
- A fare-paying service can also be obtained by contacting your supplier, local Hitachi distributor, or local Hitachi inverter sales office.

## Precautions for Product Operation

- The product should be operated following the working conditions, handling methods and precautions described in Basic Guide, User's Guide or other technical Documents.
- Be sure to confirm that the Hitachi inverter is correctly configured and installed for the intended purpose in the customer designed system.
- When using the Hitachi inverter, take following actions.
  (1) Select an inverter with sufficient capacity for the rated current and performance of customer facilities.
  (2) Implement safety design such as redundant system design.
  (3) Implement safety design which minimizes risks in case of an inverter failure.
  (4) Design the system in a way it can warn the operator about any danger.
  (5) Carry out periodic maintenance to the customer's equipment as well as the inverter.
- Hitachi inverter is designed and manufactured intentionally to be applied for general industrial equipment application. It is not intended to be used for the applications listed below. Therefore, in case inverter is used for these applications, it is out of warranty unless there is a special written agreement.
  (1) For special application such as aircraft, spacecraft, nuclear, electric power, passenger transportation, medical, submarine repeater, etc.
  (2) For application which might have a big effect on human life and property such as elevator, amusement equipment, medical equipment, etc.
- Even for above application, in case there is an agreement for the limitation of the purpose and quality, please contact to our sales office. Further study will be carried out to check whether inverter is applicable for that specific application or not.
- For applications that involve human life, or have risk of important loss, be sure to avoid a critical accident by installing a fail-safe device, protecting device, detecting device, alarm device, or spare device, etc.
- This inverter is only for three phase induction motor [IM] or three phase synchronous motor (permanent-magnet motor) [SM(PMM)]. For any other application make inquiries.

## Change on Product Specifications

- Please be aware that the information described in Brochure, Basic Guide, User's Guide or Technical Document might be modified without notice.

## Supplement

- Refer to "Chapter 16 Maintenance and Inspection" for short lifespan components.
- For optional products, refer to the guide attached to the option.
- This warranty term will not restrict a legal right of customer who has purchased the product.
- Please contact your sales agent for warranty of products.

## Contact Information

**Hitachi Industrial Equipment & Solutions America, LLC (Charlotte Office)**
Industrial Components and Equipment Division
6901 Northpark Blvd. Suite A, Charlotte, NC 28216,
U.S.A
TEL : +1(704) 494-3008
FAX : +1(704) 599-4108

**Hitachi Industrial Equipment Systems Europe GmbH**
Industrial Components & Equipment Group
Niederkasseler Lohweg191, 40547 Dusseldorf,
Germany
TEL : +49-211-5283-0

**Hitachi Asia Ltd.**
Industrial Components & Equipment Division
No.30 Pioneer Crescent #10-15, West Park Bizcentral,
Singapore 628560,
Singapore
TEL : +65-6305-7400
FAX : +65-6305-7401

**Hitachi Australia pty Ltd.**
Suite 801, Level 8, 123 Epping Road, North Ryde, NSW, 2113,
Australia
TEL : +61-2-9888-4100
FAX : +61-2-9888-4188

**Hitachi Industrial Equipment Systems Co., Ltd.**
Sumitomo Fudosan Akihabara First Building, 1-5-1
Sotokanda, Chiyoda-ku,
Tokyo, 101-0021,
Japan
TEL : +81-3-6271-7001

# S.4 Related Technical Documents

| Document name | Document number | Product bundle |
|---|---|---|
| WJ series C1 User's Guide for Basic Mode (This document) | NT361*X | (*1) |
| WJ series C1 Basic Guide | NT3611*X | ✓ |
| WJ series C1 Safety Function Guide | NT3612*X | (*1) |
| Easy-Sequence Function (EzSQ) Programming Guide | NT2021*X | (*1) |
| Inverter configuration software ProDriveNext instruction manual (HITACHI Inverter setting software) | NT8001*X | (*1) |
| WJ-CCL Quick Reference Guide (Only in Japanese) | NT331* | (*1) |
| WJ-PB Quick Reference Guide | NT354*X | (*1) |
| WJ-PN Quick Reference Guide | NT355*X | (*1) |
| WJ-ECT Quick Reference Guide | NT339*X | (*1) |

(The document version ("*" is alphabet A, B, .... ) is added to the end of document code.)

(*1) These are usually not bundled with the product but a simple Basic guide is included. For each Guides, please contact the supplier where this device was purchased or local Hitachi inverter sales office.

# S.5 Trademark

- CRIMPFOX® is a registered trademark of Phoenix Contact GmbH & Co. KG.
- Modbus® is a registered trademark of Schneider Electric USA, Inc.
- CC-Link® is a registered trademark of Mitsubishi Electric Corporation.
- EtherCAT® is a registered trademark and patented technology, licensed by Beckhoff Automation GmbH, Germany.
- PROFIBUS® and PROFINET® are registered trademarks of PROFIBUS Nutzerorganisation e.V. (PNO).
- DeviceNet® is a registered trademark of ODVA, Inc.

# C.1 Contents

S.1 Introduction ..... S-1
S.2 Cautions ..... S-2
S.3 Product Warranty and Inquiry ..... S-3
S.4 Related Technical Documents ..... S-6
S.5 Trademark ..... S-6
C.1 Contents ..... C-1

## Chapter 1 Safety Instructions/Risks

1.1 Warning Indications and Symbols ..... 1-1-1
1.1.1 Details of Warning Indications ..... 1-1-1
1.1.2 Description of Symbols ..... 1-1-1
1.2 Cautions ..... 1-2-1
1.2.1 Caution! ..... 1-2-1
1.2.2 Precautions for Installation ..... 1-2-2
1.2.3 Precautions for Wiring ..... 1-2-3
1.2.4 Precautions for Running and Test Running ..... 1-2-5
1.2.5 Precautions for Maintenance/Daily Inspection ..... 1-2-8
1.2.6 Precautions for Disposal ..... 1-2-8
1.2.7 Other Cautions ..... 1-2-9
1.2.8 Examples of Caution Labels ..... 1-2-10
1.3 Compliance to European Directive (CE) ..... 1-3-1
1.3.1 Caution for EMC (Electromagnetic Compatibility) ..... 1-3-1
1.3.2 Caution for Machinery Directive (Functional Safety) ..... 1-3-5
1.3.3 Note of European Directive (CE) ..... 1-3-5
1.4 Compliance to UL Standards ..... 1-4-1
1.4.1 UL Cautions ..... 1-4-1

## Chapter 2 Outline of This User's Guide/Procedure for Operation

2.1 What Is Written in this User's Guide ..... 2-1-1
2.1.1 Before Reading This Guide ..... 2-1-1
2.1.2 Overview of Each Chapter ..... 2-1-2
2.2 Procedure for Operation (Flowchart) ..... 2-2-1
2.2.1 When Installing a New Inverter ..... 2-2-1
2.2.2 When Replacing WJ200 (Old Model) with WJ-C1 ..... 2-2-3

## Chapter 3 Main Body of the Product


**3.1 Confirmation at the Time of Purchase ..... 3-1-1**

3.1.1 Checking the Product and the Included Items ..... 3-1-1

3.1.2 Model of the Product and Specification Label ..... 3-1-2

**3.2 Appearance of the Product and Part Name ..... 3-2-1**

3.2.1 Appearance of Each Model ..... 3-2-1

3.2.2 Part Names and Descriptions on the Front of the Product ..... 3-2-4

3.2.3 Connecting Remote Operator ..... 3-2-5


## Chapter 4 Installation


**4.1 Installation Environment ..... 4-1-1**

4.1.1 Installation Precautions ..... 4-1-1


## Chapter 5 Wire Connection


**5.1 Remove the Terminal Block Cover ..... 5-1-1**

**5.2 Main Circuit Terminal ..... 5-2-1**

5.2.1 Configuration of Main Circuit Terminal ..... 5-2-1

5.2.2 Wiring the Power Supply and Motor ..... 5-2-2

5.2.3 Arrangement of Main Circuit Terminal Block ..... 5-2-6

**5.3 Applicable Peripheral Device ..... 5-3-1**

5.3.1 Overview of Applicable Peripheral Devices ..... 5-3-1

5.3.2 Recommended Wire Diameter, Wiring Equipment, Crimp Terminal ..... 5-3-2

5.3.3 Applicable Breaker ..... 5-3-4

5.3.4 Wiring of DC Link Choke (DCL) ..... 5-3-6

5.3.5 Wiring of Braking Resistor and Regenerative Braking Unit ..... 5-3-7

**5.4 Control Circuit Terminal ..... 5-4-1**

5.4.1 Configuration of Control Circuit Terminal ..... 5-4-1

5.4.2 Recommended Wire Diameter and Wiring Method for Control Circuit Terminals ..... 5-4-7

5.4.3 Switching Sink/Source Logic and Connecting External Power Supply/Programmable Controller ..... 5-4-9


## Chapter 6 Operation Check/Residual Risk


**6.1 Overview of Residual Risk Checklist ..... 6-1-1**

**6.2 Residual Risk Checklist ..... 6-2-1**

## Chapter 7 Keypad and Related Functions


**7.1 How to Use Keypad ..... 7-1-1**

7.1.1 Name and Content of Each Part ..... 7-1-1

7.1.2 Key Operation System ..... 7-1-3

7.1.3 Example of Parameter Setting Key Operation ..... 7-1-4

**7.2 Functions Related to Keypad ..... 7-2-1**

7.2.1 Restrict Display Parameter ..... 7-2-1

7.2.2 Initialize the Parameters ..... 7-2-3

7.2.3 Prohibit Parameter Changes ..... 7-2-5

7.2.4 Protecting Data with Passwords ..... 7-2-6

7.2.5 Setting the Initial Keypad Display ..... 7-2-8

7.2.6 Automatic Registration of Changed Parameter History ..... 7-2-9

7.2.7 Display Lock [DISP] Function ..... 7-2-10

7.2.8 Remote Operator Functions ..... 7-2-11


## Chapter 8 Mandatory Setting for Motor Drive and Test Run


**8.1 Mandatory Setting for Operation ..... 8-1-1**

8.1.1 Overview of Mandatory Setting Items ..... 8-1-1

8.1.2 Changing the Load Rating of the Inverter ..... 8-1-2

8.1.3 Setting the Motor Specification Label Data to Parameters ..... 8-1-5

8.1.4 Setting Electronic Thermal for the Motor ..... 8-1-7

8.1.5 Setting Motor Constant ..... 8-1-13

8.1.6 Changing the Operation Mode of the Inverter ..... 8-1-15

**8.2 Test Run ..... 8-2-1**

8.2.1 Test Run by Connecting Only the Motor ..... 8-2-1

8.2.2 Perform a Test Run with a Machine Load ..... 8-2-5

**8.3 Carrying Out Motor Auto-tuning ..... 8-3-1**

8.3.1 Procedure for Auto-tuning of an Induction Motor ..... 8-3-1

## Chapter 9 Inverter Functions


**9.1 Selecting RUN Command and Alarm Reset ..... 9-1-1**

9.1.1 Types of RUN Command ..... 9-1-1
9.1.2 Operation by RUN Key on the Keypad ..... 9-1-2
9.1.3 Operation by Forward/Reverse Input Terminals ..... 9-1-3
9.1.4 Operation by Pushbutton (Momentary Switch) Input ..... 9-1-4
9.1.5 Operation by Modbus-RTU Communication (RS485 Communication) ..... 9-1-5
9.1.6 Operation by Communication Option Board ..... 9-1-6
9.1.7 Temporarily Changing RUN Command Input Source ..... 9-1-7
9.1.8 Disabling the STOP/RESET Key on the Keypad ..... 9-1-8
9.1.9 Resetting an Alarm ..... 9-1-9

**9.2 Selecting Frequency Command ..... 9-2-1**

9.2.1 Types of Frequency Command ..... 9-2-1
9.2.2 Setting Frequency Command by Keypad ..... 9-2-3
9.2.3 Setting Frequency Command by Analog Inputs (Voltage/Current) ..... 9-2-4
9.2.4 Setting Frequency Command by Multi-Speed Operation Function ..... 9-2-7
9.2.5 Setting Frequency Command for Jogging and Inching Operation ..... 9-2-10
9.2.6 Setting Frequency Command by Modbus-RTU Communication (RS485 Communication) ..... 9-2-11
9.2.7 Setting Frequency Command by Communication Option Board ..... 9-2-12
9.2.8 Setting Frequency Command by Pulse Input ..... 9-2-13
9.2.9 Setting Frequency Command by Program Operation Function EzSQ ..... 9-2-14
9.2.10 Setting Frequency Command by PID Control ..... 9-2-15
9.2.11 Setting Frequency Command by Calculation Operation ..... 9-2-16
9.2.12 Temporarily Adding a Set Value to the Frequency Command ..... 9-2-17
9.2.13 Increasing/Decreasing Frequency Command by Remote Control ..... 9-2-18
9.2.14 Temporarily Changing the Frequency Command Input Source ..... 9-2-21
9.2.15 Setting Frequency Command on Frequency Monitor ..... 9-2-22

**9.3 Using Motor Acceleration/Deceleration Function ..... 9-3-1**

9.3.1 Changing the Acceleration/Deceleration Time ..... 9-3-1
9.3.2 Switching the Acceleration/Deceleration Time in Two Stages ..... 9-3-3
9.3.3 Stopping Acceleration/Deceleration ..... 9-3-4
9.3.4 Changing the Acceleration/Deceleration Pattern ..... 9-3-5
9.3.5 Making the Frequency Instantaneously Follow the Command ..... 9-3-7

**9.4 Limiting Frequency Command/RUN Command ..... 9-4-1**

9.4.1 Limiting Frequency Command ..... 9-4-1
9.4.2 Limiting RUN Command Direction ..... 9-4-2
9.4.3 Limiting Rotation Output Direction ..... 9-4-3
9.4.4 Disabling Output Until RUN Command Permission ..... 9-4-4

**9.5 Selecting Control Mode for the Motor and Load ..... 9-5-1**
9.5.1 Selection of Control Mode ..... 9-5-1
9.5.2 Driving with V/f Control ..... 9-5-2
9.5.3 Using Torque Boost Function ..... 9-5-5
9.5.4 Driving with Energy-saving Mode ..... 9-5-7
9.5.5 Driving with V/f Control with Encoder ..... 9-5-8
9.5.6 Stabilizing Motor Hunting ..... 9-5-10
9.5.7 Driving with Sensorless Vector Control ..... 9-5-11
9.5.8 Using Encoder Feedback ..... 9-5-14

**9.6 Speed/Torque Control According to Load ..... 9-6-1**
9.6.1 Speed Control and Torque Control ..... 9-6-1
9.6.2 Driving with Limited Torque ..... 9-6-2
9.6.3 Driving by Torque Reference ..... 9-6-5
9.6.4 Driving with Torque Bias ..... 9-6-6

**9.7 Selecting Start/Stop Modes ..... 9-7-1**
9.7.1 Starting with Gradually Increasing Voltage ..... 9-7-1
9.7.2 Starting with DC Braking ..... 9-7-2
9.7.3 Starting with Frequency Matching ..... 9-7-3
9.7.4 Starting with Active Frequency Matching ..... 9-7-4
9.7.5 Starting after Trip Reset or Power-on ..... 9-7-8
9.7.6 Starting after Free Run Stop ..... 9-7-9
9.7.7 Selecting Stop Operation ..... 9-7-10
9.7.8 Stopping with DC Braking ..... 9-7-11
9.7.9 Switching to Commercial Power Supply (Commercial Power Supply Change) ..... 9-7-15
9.7.10 Starting and Stopping with External Brake Control ..... 9-7-16
9.7.11 Switching Between Two Motors ..... 9-7-18

**9.8 Driving by PID Process Control ..... 9-8-1**
9.8.1 Using PID Control ..... 9-8-1

**9.9 Using Trip Prevention Functions ..... 9-9-1**
9.9.1 Restriction to Avoid Overload ..... 9-9-1
9.9.2 Restriction to Avoid Overcurrent ..... 9-9-3
9.9.3 Suppressing Overvoltage by Controlling Output Frequency ..... 9-9-4
9.9.4 Suppressing Overvoltage by Controlling Output Voltage ..... 9-9-6
9.9.5 Suppressing Overvoltage with Braking Resistor ..... 9-9-8
9.9.6 Restarting after Instantaneous Power Failure/Undervoltage ..... 9-9-9
9.9.7 Restarting after Overvoltage/Overcurrent ..... 9-9-14
9.9.8 Continuing to Drive Even after Instantaneous Power Failure/Undervoltage Error ..... 9-9-17

**9.10 Using System Protection Functions ..... 9-10-1**
9.10.1 Adjusting Carrier Frequency ..... 9-10-1
9.10.2 Automatically Reducing Carrier Frequency ..... 9-10-2
9.10.3 Externally Tripping the Inverter ..... 9-10-3
9.10.4 Preventing Unattended Start at Power-on ..... 9-10-4
9.10.5 Avoiding Mechanical Resonance of Motor and Machine ..... 9-10-5
9.10.6 Selecting Cooling Fan Operation ..... 9-10-6
9.10.7 Monitoring Motor Temperature ..... 9-10-7

**9.11 Outputting Warning Signals to Terminals ..... 9-11-1**
9.11.1 Outputting an Alarm Signal ..... 9-11-1
9.11.2 Outputting a Major Failure Signal ..... 9-11-2
9.11.3 Outputting a Warning When Overload Occurs ..... 9-11-3
9.11.4 Outputting a Warning When Current Is Low ..... 9-11-4
9.11.5 Outputting a Warning before Electronic Thermal Protection ..... 9-11-5
9.11.6 Outputting a Warning When Cooling Fin Temperature Rises ..... 9-11-6
9.11.7 Outputting a Warning for Capacitor Life on the Control Board ..... 9-11-7
9.11.8 Outputting a Warning for Cooling Fan Life ..... 9-11-8
9.11.9 Outputting a Warning When RUN Time or Power-on Time Elapses ..... 9-11-9
9.11.10 Detecting Analog Input Disconnection/Out of Range ..... 9-11-10

**9.12 Outputting Running Status to Terminals ..... 9-12-1**
9.12.1 Outputting a Signal during Running ..... 9-12-1
9.12.2 Outputting a Signal during Forward/Reverse Running ..... 9-12-2
9.12.3 Outputting a Signal When RUN Command Is Given ..... 9-12-3
9.12.4 Outputting a Signal When Inverter Is Ready to Run ..... 9-12-4

**9.13 Outputting Signals According to the Output Frequency ..... 9-13-1**
9.13.1 Outputting a Signal When the Output Frequency Reaches the Target ..... 9-13-1
9.13.2 Outputting a Signal When the Output Frequency Exceeds the Set Value ..... 9-13-2
9.13.3 Outputting a Signal When the Output Frequency Is Close to the Set Value ..... 9-13-3
9.13.4 Outputting a Signal When the Output Frequency is Close to 0 Hz ..... 9-13-4
9.13.5 Outputting a Signal by Combining Two Output Signals ..... 9-13-5

**9.14 Performing Positioning Operation (Simple Position Control Function) ..... 9-14-1**
9.14.1 Overview of Simple Position Control Function and Basic Settings ..... 9-14-1
9.14.2 Performing Homing Function during Positioning Operation ..... 9-14-8
9.14.3 Operating by Switching between Speed Control and Position Control ..... 9-14-12
9.14.4 Operating Simple Position Control with Brake Control ..... 9-14-13

**9.15 Functions with External Signal Input ..... 9-15-1**
9.15.1 Using External I/O Input Signal Functions ..... 9-15-1
9.15.2 Adjusting I/O Input Signal Response ..... 9-15-3
9.15.3 Adjusting the Analog Input ..... 9-15-4

9.16 Functions with External Signal Output ..... 9-16-1
9.16.1 Using External I/O Output Signal Functions ..... 9-16-1
9.16.2 Delaying and Holding Output Signals ..... 9-16-4
9.16.3 Outputting Monitor Data by Pulse Output ..... 9-16-5
9.16.4 Outputting Monitor Data by Analog Output ..... 9-16-7

## Chapter 10 Monitor Functions

10.1 Check the Operation Data ..... 10-1-1
10.1.1 Monitor the Output Frequency ..... 10-1-1
10.1.2 Monitor the Output Current ..... 10-1-2
10.1.3 Monitor the Direction of Rotation ..... 10-1-2
10.1.4 Monitor the Detected Speed of the Motor ..... 10-1-3
10.1.5 Monitor the Data Related to Torque Reference/Output Torque ..... 10-1-4
10.1.6 Monitor the Data Related to Simple Position Control ..... 10-1-5
10.1.7 Monitor the Output Voltage ..... 10-1-6
10.1.8 Monitor the Input Power/Accumulated Power of the Inverter ..... 10-1-7
10.1.9 Monitor P-N Voltage (Internal DC Voltage) ..... 10-1-8
10.1.10 Monitor the Load Ratio of the Braking Resistor ..... 10-1-9
10.1.11 Monitor the Electronic Thermal Load Ratio ..... 10-1-10

10.2 Check I/O Terminal Related Data ..... 10-2-1
10.2.1 Monitor the Status of Input and Output Terminals ..... 10-2-1
10.2.2 Monitor the Analog Input [Ai1]/[Ai2] Terminal/Pulse Input [PLA] Terminal ..... 10-2-2

10.3 Check the Information Related to the Internal Status of the Inverter ..... 10-3-1
10.3.1 Monitor the Accumulated Run Time/Accumulated Power-On Time of the Inverter ..... 10-3-1
10.3.2 Monitor the Cooling Fin Temperature ..... 10-3-2
10.3.3 Monitor the Results of Lifetime Diagnosis ..... 10-3-3
10.3.4 Monitor the Operation Mode of the Inverter ..... 10-3-4
10.3.5 Monitor the Frequency Command Source and RUN Command Source ..... 10-3-5
10.3.6 Monitor Two Types of Data on a Single Monitor Screen ..... 10-3-6

10.4 Check EzSQ Function/PID Function Related Data ..... 10-4-1
10.4.1 Monitor EzSQ Function Related Data ..... 10-4-1
10.4.2 Monitor PID Function Related Data ..... 10-4-1

10.5 Check Trip and Warning Related Information ..... 10-5-1
10.5.1 Monitor the Number of Trips and Trip History ..... 10-5-1
10.5.2 Monitor Warning Information ..... 10-5-2

## Chapter 11 RS485 Communication


**11.1 Modbus-RTU ..... 11-1-1**
11.1.1 Communication Specifications and Setting Parameters ..... 11-1-1
11.1.2 Communication Wiring and Connection ..... 11-1-3
11.1.3 Communication Process ..... 11-1-4
11.1.4 Message Configuration ..... 11-1-5

**11.2 Explanation of Modbus-RTU Function Codes ..... 11-2-1**
11.2.1 Read Coil Status [01h] ..... 11-2-1
11.2.2 Read Holding Registers [03h] ..... 11-2-3
11.2.3 Write Coil [05h] ..... 11-2-4
11.2.4 Write Holding Registers [06h] ..... 11-2-6
11.2.5 Loop-back Test [08h] ..... 11-2-7
11.2.6 Write Multiple Coils [0Fh] ..... 11-2-8
11.2.7 Write Multiple Holding Registers [10h] ..... 11-2-9
11.2.8 Read/Write Multiple Holding Registers [17h] ..... 11-2-10
11.2.9 Exceptional Responses ..... 11-2-11
11.2.10 Storing Changes to Holding Registers ..... 11-2-12
11.2.11 Endian Selection of Holding Registers ..... 11-2-14

**11.3 Modbus Mapping Function ..... 11-3-1**
11.3.1 Setting Modbus Mapping Function ..... 11-3-1

**11.4 Inter-inverter Communication Function EzCOM ..... 11-4-1**
11.4.1 What is EzCOM? ..... 11-4-1
11.4.2 Setting EzCOM ..... 11-4-2


## Chapter 12 ProDriveNext/EzSQ


**12.1 Inverter Configuration Software ProDriveNext ..... 12-1-1**
12.1.1 What You Can Do with ProDriveNext ..... 12-1-1

**12.2 Program Operation Function EzSQ ..... 12-2-1**
12.2.1 What Is EzSQ? ..... 12-2-1
12.2.2 EzSQ Program Start and Related Parameters ..... 12-2-2


## Chapter 13 Option Board


**13.1 Using Option Board for WJ200 Series ..... 13-1-1**
13.1.1 Available option boards for WJ200 series ..... 13-1-1

**13.2 Settings for Each Option Board ..... 13-2-1**
13.2.1 Common Settings for Communication Option Board ..... 13-2-1
13.2.2 CC-Link Option ..... 13-2-2
13.2.3 EtherCAT Option ..... 13-2-2
13.2.4 PROFIBUS Option ..... 13-2-2
13.2.5 PROFINET Option ..... 13-2-2

## Chapter 14 Safety Function STO


**14.1 Using the Safety Function STO (Safe Torque Off) ..... 14-1-1**

14.1.1 STO Function ..... 14-1-1

14.1.2 STO State Monitor Output (EDM Signal) ..... 14-1-3

14.1.3 STO Status Indication ..... 14-1-4


## Chapter 15 Tips/FAQ/Troubleshooting


**15.1 Self Diagnosis of Problems ..... 15-1-1**

15.1.1 Procedure for Checking When a Problem Occurs ..... 15-1-1

**15.2 Troubleshooting for Protection Functions Related Error ..... 15-2-1**

15.2.1 Checking Trip Information ..... 15-2-1

15.2.2 Error Code List and Countermeasures ..... 15-2-2

**15.3 Troubleshooting for Warning Functions Related Error ..... 15-3-1**

15.3.1 Warning Display ..... 15-3-1

15.3.2 Other Displays ..... 15-3-2

**15.4 How to Check When Something Is Wrong ..... 15-4-1**

15.4.1 Troubleshooting Other Than Trip and Warning ..... 15-4-1


## Chapter 16 Maintenance and Inspection


**16.1 Cautions for Maintenance and Inspection ..... 16-1-1**

16.1.1 Daily Inspection ..... 16-1-2

16.1.2 Cleaning ..... 16-1-2

16.1.3 Periodic Inspection ..... 16-1-2

16.1.4 Periodic Function Test for Safety Function (STO) ..... 16-1-2

**16.2 Daily Inspection and Periodic Inspection ..... 16-2-1**

16.2.1 Inverter Inspection List ..... 16-2-1

16.2.2 Megger® Test ..... 16-2-3

16.2.3 Withstand Voltage Test ..... 16-2-3

16.2.4 Checking the Inverter and Converter Section ..... 16-2-4

16.2.5 Smoothing Capacitor Life Curve ..... 16-2-5

16.2.6 Life Warning Output ..... 16-2-5

16.2.7 Measurement Methods of I/O Voltage, Current, and Power ..... 16-2-6


## Chapter 17 Specifications/Dimensions/Derating


**17.1 Standard Specifications ..... 17-1-1**

17.1.1 Single-phase 200 V Class ..... 17-1-1

17.1.2 Three-phase 200 V Class ..... 17-1-2

17.1.3 Three-phase 400 V Class ..... 17-1-3

17.1.4 Common Specifications ..... 17-1-4

**17.2 External Dimensions ..... 17-2-1**

**17.3 Current Derating ..... 17-3-1**

## Chapter 18 List of Parameters/Modbus Coil/Register Numbers


**18.1 List of Modbus Coil Numbers/Special Register Numbers ..... 18-1-1**

18.1.1 List of Modbus Coil Numbers ..... 18-1-1

18.1.2 List of Modbus Special Holding Registers ..... 18-1-3

**18.2 List of Parameters and Modbus Holding Registers ..... 18-2-1**

18.2.1 d Monitor Group ..... 18-2-1

18.2.2 F Parameter Group ..... 18-2-4

18.2.3 A Parameter Group ..... 18-2-5

18.2.4 b Parameter Group ..... 18-2-11

18.2.5 C Parameter Group ..... 18-2-19

18.2.6 List of Intelligent Input Terminal Functions ..... 18-2-24

18.2.7 List of Intelligent Output Terminal Functions ..... 18-2-25

18.2.8 H Parameter Group ..... 18-2-26

18.2.9 P Parameter Group ..... 18-2-28

18.2.10 U Parameter Group ..... 18-2-34


## Appendix


**A.1 Replacement from WJ200 ..... A-1-1**

A.1.1 Comparison of External Dimensions and Mounting Dimensions ..... A-1-1

A.1.2 Comparison of Main Circuit Terminal Block ..... A-1-7

A.1.3 Comparison of Control Circuit Terminal Block ..... A-1-11

A.1.4 Data Copy from WJ200 to WJ-C1 ..... A-1-14

A.1.5 Comparison of Functions of WJ200 and WJ-C1 ..... A-1-15

A.1.6 WJ200 High Frequency Compatible Mode ..... A-1-18

**A.2 Glossary ..... A-2-1**

**A.3 Revision History ..... A-3-1**

**A.4 Index ..... A-4-1**

1

# Chapter 1 Safety Instructions/Risks

This chapter includes instructions for installation, wiring, operation, maintenance, inspection and use of the inverter.
Be sure to read this User's Guide and other guides thoroughly before installing, wiring, operating, maintaining, inspecting or using the inverter.


**1.1 Warning Indications and Symbols ..... 1-1-1**
- 1.1.1 Details of Warning Indications ..... 1-1-1
- 1.1.2 Description of Symbols ..... 1-1-1

**1.2 Cautions ..... 1-2-1**
- 1.2.1 Caution! ..... 1-2-1
- 1.2.2 Precautions for Installation ..... 1-2-2
- 1.2.3 Precautions for Wiring ..... 1-2-3
- 1.2.4 Precautions for Running and Test Running ..... 1-2-5
- 1.2.5 Precautions for Maintenance/Daily Inspection ..... 1-2-8
- 1.2.6 Precautions for Disposal ..... 1-2-8
- 1.2.7 Other Cautions ..... 1-2-9
- 1.2.8 Examples of Caution Labels ..... 1-2-10

**1.3 Compliance to European Directive (CE) ..... 1-3-1**
- 1.3.1 Caution for EMC (Electromagnetic Compatibility) ..... 1-3-1
- 1.3.2 Caution for Machinery Directive (Functional Safety) ..... 1-3-5
- 1.3.3 Note of European Directive (CE) ..... 1-3-5

**1.4 Compliance to UL Standards ..... 1-4-1**
- 1.4.1 UL Cautions ..... 1-4-1

# 1.1 Warning Indications and Symbols

## 1.1.1 Details of Warning Indications

- In the User's Guide, the severity levels of safety precautions and residual risks are classified as follows: "DANGER", "WARNING" and "CAUTION".

| | |
|---|---|
| DANGER | Indicates that incorrect handling may cause hazardous situations, which have a high chance of resulting in serious personal injury or death and may result in major physical loss or damage. |
| WARNING | Indicates that incorrect handling may cause hazardous situations, which may result in serious personal injury or death, and may result in major physical loss or damage. |
| CAUTION | Indicates that incorrect handling may cause hazardous situations, which may result in serious personal injury or death, and may result in major physical loss or damage. |

- Furthermore, "CAUTION" level description may lead to a serious risk depend on the circumstances. Be sure to follow the instruction because whichever contains important safety description.
- There are the text includes notes using a only safety symbol "". These also contains important safety instructions, so be sure to follow the instructions.

## 1.1.2 Description of Symbols

- This document contains annotations with graphic symbols. Be sure to pay close attention to the contents and be sure to follow them.

| | | |
|---|---|---|
| | Indicates a danger, warning or caution notice for fire, electric shock and high temperature in the operation of the product.<br>Details are indicated in or near by pictures or words. | |
| | | The drawing on the left indicates "a non-specific and general danger or caution". |
| | | The drawing on the left indicates "a possible damage due to electric shock". |
| | Indicates "what you must not do" to prohibit the described acts in the operation of the product. | |
| | Indicates "what you must do" according to the instructions in the operation of the product. | |

# 1.2 Cautions

## 1.2.1 Caution!

**DANGER**

| | |
|---|---|
| CAUTION | • Incorrect handling may result in personal death or severe injury, or may result in damage to the inverter, motor or the whole system. |
| DO | • Be sure to read the Guide and appended documents thoroughly before installing, wiring, operating, maintaining, inspecting or using the inverter. |

| | |
|---|---|
| CAUTION | • Notes for possible causes of danger or damage are also provided for each explanation in other sections |
| DO | • Be sure to read the corresponding explanation thoroughly before installing, wiring, operating, maintaining, inspecting or using the inverter. |

| | |
|---|---|
| CAUTION | • Many of the drawings in the Guide show the inverter with covers and/or parts blocking your view removed to illustrate the details of the product. |
| DO | • Do not operate the inverter in the status shown in those drawings. If you have removed the covers and/or parts, be sure to reinstall them in their original positions before starting operation and follow all instructions in this guide when operating the inverter. |

## 1.2.2 Precautions for Installation

### WARNING

| | |
|---|---|
| Fire | ● **Risk of Fire!** |
| Prohibited | • Do not place flammable materials near the installed inverter.<br>• Prevent foreign matter (e.g., cut pieces of wire, sputtering welding materials, iron chips, wire, and dust) from entering the inverter. |
| DO | • Install the inverter on a non-flammable surface, e.g., metal.<br>• Install the inverter in a well-ventilated indoor site not exposed to direct sunlight. Avoid places where the inverter is exposed to high temperature, high humidity, condensation, dust, explosive gases, corrosive gases, flammable gases, grinding fluid mist, hydrogen sulfide or salt water. |

| | |
|---|---|
| Injury | ● **Risk of injury!** |
| Prohibited | • Do not install and operate the inverter if it is damaged or parts are missing. |

| | |
|---|---|
| Fall Injury | ● **Risk of injury due to the inverter falling!** |
| Prohibited | • When carrying the inverter, do not hold its cover parts. |
| DO | • Install the inverter on a structure able to bear the weight specified in the User's Guide.<br>• Install the inverter on a vertical wall that is free of vibrations. |

| | |
|---|---|
| Failure | ● **Risk of failure of the inverter!** |
| Prohibited | • The inverter is a precision equipment. Do not allow it to fall or be subject to high impacts.<br>• Also do not step on it, or place a heavy load on it.<br>• Avoid places where static electricity discharges often occur (for example, on a rug) for the operation of the product. |
| DO | • In order to discharge static electricity from your body, touch a safe metal surface first before starting the operation. |

## 1.2.3 Precautions for Wiring

### DANGER

| | |
|---|---|
| Electric shock<br>Fire | ● **Risk of an electric shock and fire!** |
| DO | • Be sure to ground the inverter.<br>• Entrust wiring work to a qualified electrician.<br>• Before the wiring work make sure to turn off the power supply and wait for more than 10 minutes. (Confirm than the charge lamp is OFF and the voltage between terminals [P/+] and [N/-] is 45 VDC or less.) |

| | |
|---|---|
| Failure | ● **Risk of failure of the inverter!** |
| Prohibited | • Do not pull the wire after wiring. |

| | |
|---|---|
| Electric shock<br>Injury | ● **Risk of an electric shock and injury!** |
| DO | • Perform the wiring only after installing the inverter. |

## WARNING

| | |
|---|---|
| Injury<br>Fire | ● **Risk of injury and fire!** |
| Prohibited | • Do not connect AC power supply to any of the output terminals ([U/T1], [V/T2], and [W/T3]). |
| DO | • Make sure that the voltage and frequency of AC power supply match the rated voltage (AC input voltage) and frequency of your inverter. |

| | |
|---|---|
| Electric shock<br>Injury | ● **Risk of electric shock and injury!** |
| DO | • Before operating the slide switch in the inverter, be sure to turn off the power supply.<br>• Since the inverter supports two modes of cooling-fan operation, the inverter power is not always off, even when the cooling fan is stopped. Before operating the switch, be sure to turn off the power supply and wait for more than 10 minutes. (Confirm that the Charge lamp on the inverter is off and the DC voltage between terminals [P/+] and [N/-] is 45 V or less.)<br>• Prevent the distribution cable from being compressed or getting caught to avoid damage to the cable. |

| | |
|---|---|
| Fire | ● **Risk of fire!** |
| Prohibited | • Do not input a single-phase power supply to the three-phase model.<br>• Do not connect a resistor directly to any of the DC terminals ([PD/+1], [P/+], and [N/-]).<br>• Do not use the magnetic contactor installed on the primary and secondary sides of the inverter to stop its operation. |
| DO | • Tighten the screws and bolts with the specified torque.<br>• No screws and bolts must be left loose.<br>• Connect an earth-leakage breaker to the power input circuit.<br>• Use only the power cables, earth-leakage breaker, and magnetic contactors that have the specified capacity (ratings). |

| | |
|---|---|
| Burnout | ● **Risk of damage to the inverter and burnout of the motor!** |
| Prohibited | • Do not operate the inverter when an output phase is lost (output phase loss). |

## 1.2.4 Precautions for Running and Test Running

### DANGER

| | |
|---|---|
| Electric shock<br>Fire | ● **Risk of electric shock and fire!** |
| Prohibited | • While power is supplied to the inverter, do not touch any internal part or the terminal of the inverter. Also do not check signals, or connect/disconnect any wire or connector.<br>• While power is supplied to the inverter, do not touch any internal part of the inverter. Also do not insert a bar in it. |

| | |
|---|---|
| Electric shock | ● **Risk of electric shock!** |
| Prohibited | • Be sure to close the terminal block cover before turning on the inverter power. Do not open the terminal block cover while power is being supplied to the inverter or voltage remains inside. Do not touch the internal PCB, terminal block or connector while power is being supplied to the inverter or voltage remains inside.<br>• Do not operate switches in the inverter or on the board with wet hands. |

| | |
|---|---|
| Injury<br>Fire | ● **Risk of injury and fire!** |
| Prohibited | • While power is supplied to the inverter, do not touch the terminal of the inverter, even if it has stopped. |

| | |
|---|---|
| Injury<br>Damage | ● **Risk of injury and damage to machine!** |
| Prohibited | • Do not select the retry mode for controlling an elevating or traveling device because free-running status occurs in retry mode.<br>• If you use the EzSQ program, before operating the inverter, verify that secure operation of the program is ensured. |

| | |
|---|---|
| Injury | ● **Risk of injury!** |
| Prohibited | • If the retry mode has been selected, the inverter will restart suddenly after a break upon detection of an error. Stay away from the machine controlled by the inverter when the inverter is under such circumstances. (Design the machine so that human safety can be ensured, even when the inverter restarts suddenly.) |
| DO | • The STOP/RESET key on the keypad can be enabled/disabled using the "STOP/RESET-key enable [b087]". Prepare an emergency stop switch separately.<br>• If a RUN command has been input to the inverter before a short-term power failure, the inverter may restart operation after the power recovery. If such a restart may put persons in danger, design a system configuration that disables the inverter from restarting after power recovery.<br>• If a RUN command has been input to the inverter before the inverter enters alarm status, the inverter will restart suddenly when the alarm status is reset (by terminal, key operation or communication). Before resetting the alarm status, make sure that no RUN command has been input.<br>• When an unexpected event occurs, do not touch the inverter or cable.<br>• Thoroughly understand and check the functions set in the inverter, and use it only after confirming safety. Be careful that RUN command or resetting operation do not cause an unexpected restart.<br>• When an error (alarm) occurs, before moving to the next operation (resetting the alarm status or reapplying the power), make sure that no RUN command has been input. If the inverter has received a RUN command, it restarts automatically. |

## WARNING

| | |
|---|---|
| Injury<br>Damage | ● **Risk of injury and damage to machine!** |
| DO | • The inverter allows you to easily control the speed of the motor or machine operations. Before operating the inverter, confirm the capacity and ratings of the motor or machine controlled by the inverter.<br>• When using the inverter to operate a motor at a high frequency, check the allowable motor speeds with the manufacturers of the motor and the machine to be driven and obtain their consent before starting inverter operation.<br>• During inverter operation, check the motor for the direction of rotation, abnormal sound, and vibrations. |

| | |
|---|---|
| Burn injury | ● **Risk of burn injury!** |
| Prohibited | • Do not touch the heat sink, which heats up during the inverter operation. |

| | |
|---|---|
| Injury<br>Damage | ● **Risk of injury and damage to machine!** |
| DO | • Install an external brake system if needed. |

## 1.2.5 Precautions for Maintenance/Daily Inspection

**DANGER**

| | |
|---|---|
| Electric shock | ● **Risk of electric shock!** |
| Prohibited | • Do not perform maintenance, inspection, and the replacement of parts other than designated person. (Be sure to remove wristwatches and metal accessories, e.g., bracelets, before maintenance and inspection work and to use insulated tools for the work.) |
| DO | • Before inspecting the inverter, be sure to turn off the power supply and more than 10 minutes. (Confirm that the Charge lamp on the inverter is off and the DC voltage between terminals [P/+] and [N/-] is 45 V or less.) |

## 1.2.6 Precautions for Disposal

**DANGER**

| | |
|---|---|
| Injury Explosion | ● **Risk of injury and explosion!** |
| DO | • For disposal of the inverter, outsource to a qualified industrial waste disposal contractor. Disposing of the inverter on your own may result in an explosion of the capacitor or produce poisonous gas.<br>• Contact your supplier or local Hitachi sales office for fixing the inverter. |
| DO | • A qualified industrial waste disposal contractor includes industrial waste collector/transporter and industrial waste disposal operator.<br>• Follow the laws and regulations of each country for disposing of the inverter. |

## 1.2.7 Other Cautions

### DANGER

| | |
|---|---|
| Electric shock<br>Fire<br>Injury | ● **Risk of electric shock, fire and injury!** |
| Prohibited | • Never modify the inverter. |

### CAUTION

| | |
|---|---|
| Life cycle | ● **Risk of significantly shortening the life cycle of a product!** |
| DO | • If wood materials for packaging are needed to be sterilized and disinfected, make sure to use a means other than the wood fumigation method. If the product is included in the fumigation treatment, electronic parts could receive critical damage from the emitted gases or vapors. Especially, halogen disinfectants (including fluorine, chlorine, bromine and iodine) can cause corrosion in the capacitor. |

* For risks other than the above, also refer to "Chapter 6 Operation Check/Residual Risk"

## 1.2.8 Examples of Caution Labels

- The following describes label formats to prevent errors from occurring in the motor, inverter and system.
- If external operation, program operation or retry function has been set, the operation may start automatically after the power is on. Use these labels referring to the examples on the right as a reminder for caution.

### (Examples of labels)

- Write instructions on these labels as a reminder.

| | |
|---|---|
| DANGER | WARNING |
| CAUTION | |

- Reminder for caution for retry operation after an error

DANGER

Stay away from the motor or system even if they have stopped. Even if they have stopped running, after the elapse of a certain period, they suddenly restart automatically.

- Reminder for caution for remote operation in communication and terminal contact operation after the power is on.

DANGER

Stay away from the motor or system even if they have stopped.
When power is supplied to them, they start running automatically.

# 1.3 Compliance to European Directive (CE)

## 1.3.1 Caution for EMC (Electromagnetic Compatibility)

- The WJ-C1 inverter complies with Electromagnetic Compatibility (EMC) Directive (2014/30/EU). When using the inverter in Europe, you must comply with the following specifications and requirements to meet the EMC Directive and other standards in Europe.

**WARNING**

- This equipment must be installed, adjusted, and maintained by qualified engineers who have expert knowledge of electric work, inverter operation, and the hazardous circumstances that can occur. Otherwise, personal injury may result.

1. Power supply requirements:
   - Voltage fluctuation must be -15% to +10% or less.
   - Voltage imbalance must be ±3% or less.
   - Frequency variation must be ±4% or less.
   - Total harmonic distortion (THD) of voltage must be ±10% or less.

2. Installation requirements:
   - The WJ-C1 complies with the EMC Directive by installing an EMC filter. Applicable EMC filter depends on the series and capacity of the inverter. Be sure to use an EMC filter compatible with the inverter model by referring "Applicable EMC Filter" on the next page.

3. Wiring requirements:
   - Use a shielded wire (screened cable) with a length of 25 meters or less for motor wiring.
   - If the length of the motor wire exceeds 20 meters, use an output AC reactor to reduce the leakage current.
   - The carrier frequency should be 10 kHz or lower, which satisfies the EMC requirement.
   - The main circuit wiring must be separated from the control circuit wiring.

4. Environmental requirements:
   - Ambient temperature: -10 to 50˚C (at ND rating), -10 to 40˚C (at LD rating) (current derating required)
   - Humidity: 20 to 90%RH (non-condensing)
   - Vibration: 10 to 57 Hz: amplitude 0.075 mm
     57 to 150 Hz: 9.8 $m/s^2$ (1.0 G)
   - Install location: altitude 1000 m or less (free from corrosive gases and dust)

## Applicable EMC filter

| Power Supply | Model | EMC filter | EMC class | | Carrier Frequency | Cable Length |
|---|---|---|---|---|---|---|
| | | | In metal cabinet | Not in metal cabinet | | |
| 1 φ 200 V | C1-001SF | FPF-9120-10-SW | C1 | C2 | 10 (kHz) | 25 (m) (Shielded) |
| | C1-002SF | | | | | |
| | C1-004SF | | | | | |
| | C1-007SF | FPF-9120-14-SW | | | | |
| | C1-015SF | FPF-9120-24-SW | | | | |
| | C1-022SF | | | | | |
| 3 φ 200 V | C1-001LF | NF-CEH7 | - | C3 | | |
| | C1-002LF | | | | | |
| | C1-004LF | | | | | |
| | C1-007LF | | | | | |
| | C1-015LF | NF-CEH10 | | | | |
| | C1-022LF | NF-CEH20 | | | | |
| | C1-037LF | | | | | |
| | C1-055LF | NF-CEH30 | | | | |
| | C1-075LF | NF-CEH40 | | | | |
| | C1-110LF | NF-CEH60 | | | | |
| | C1-150LF | NF-CEH80 | | | | |
| 3 φ 400 V | C1-004HF | FPF-9340-05-SW | C1 | C2 | | |
| | C1-007HF | | | | | |
| | C1-015HF | FPF-9340-10-SW | | | | |
| | C1-022HF | | | | | |
| | C1-030HF | | | | | |
| | C1-040HF | FPF-9340-14-SW | | | | |
| | C1-055HF | FPF-9340-30-SW | | | | |
| | C1-075HF | | | | | |
| | C1-110HF | FPF-9340-50-SW | | | | |
| | C1-150HF | | | | | |

## Precautions for installation and wiring

1. Input-side AC reactor or other equipment is required if necessary to comply with EMC directive from the harmonic distortion point of view (IEC 61000-3-2 and 4).
2. If the motor cable length exceeds 20 m, use output-side AC reactor to avoid unexpected problem due to the leakage current from the motor cable (such as malfunction of the thermal relay, vibration of the motor, etc.).
3. As user you must ensure that the HF (high frequency) impedance between adjustable frequency inverter, filter, and ground is as small as possible.
   - Ensure that the connections are metallic and have the largest possible contact areas (zinc-plated mounting plates).
4. Avoid conductor loops that act like antennas, especially loops that encompass large areas.
   - Avoid unnecessary conductor loops.
   - Avoid parallel arrangement of low-level signal wiring and power-carrying or noise-prone conductors.
5. Use shielded wiring for the motor cable and all analog and digital control lines.
   - Allow the effective shield area of these lines to remain as large as possible; i.e., do not strip away the shield (screen) further away from the cable end than absolutely necessary.
   - With integrated systems (for example, when the adjustable frequency inverter is communicating with some type of supervisory controller or host computer in the same control cabinet and they are connected at the same ground + PE-potential), connect the shields of the control lines to ground + PE (protective earth) at both ends. With distributed systems (for example the communicating supervisory controller or host computer is not in the same control cabinet and there is a distance between the systems), we recommend connecting the shield of the control lines only at the end connecting to the adjustable frequency inverter. If possible, route the other end of the control lines directly to the cable entry section of the supervisory controller or host computer. The shield conductor of the motor cables always must be connected to ground + PE at both ends.
   - To achieve a large area contact between shield and ground + PE-potential, use a PG screw with a metallic shell, or use a metallic mounting clip.
   - Use only cable with braided, tinned copper mesh shield (type "CY") with 85%coverage.
   - The shielding continuity should not be broken at any point in the cable. If the use of reactors, contactors, terminals, or safety switches in the motor output is necessary, the unshielded section should be kept as short as possible.
   - Some motors have a rubber gasket between terminal box and motor housing. Very often, the terminal boxes, and particularly the threads for the metal PG screw connections, are painted. Make sure there is always a good metallic connection between the shielding of the motor cable, the metal PG screw connection, the terminal box, and the motor housing. If necessary, carefully remove paint between conducting surfaces.
6. Take measures to minimize interference that is frequently coupled in through installation cables.
   - Separate interfering cables with 0.25 m minimum from cables susceptible to interference. A particularly critical point is laying parallel cables over longer distances. If two cables intersect (one crosses over the other), the interference is smallest if they intersect at an angle of 90˚.
7. Cables susceptible to interference should therefore only intersect motor cables, intermediate circuit cables, or the wiring of a rheostat at right angles and never be laid parallel to them over longer distances. Minimize the distance between an interference source and an interference sink (interference- threatened device), thereby decreasing the effect of the emitted interference on the interference sink.
   - You should use only interference-free devices and maintain a minimum distance of 0.25 m from the adjustable frequency inverter.
8. Follow safety measures in the filter installation.
   - If using external EMC filter, ensure that the ground terminal (PE) of the filter is properly connected to the ground terminal of the adjustable frequency inverter. An HF ground connection via metal contact between the housings of the filter and the adjustable frequency inverter, or solely via cable shield, is not permitted as a protective conductor connection. The filter must be solidly and permanently connected with the ground potential so as to preclude the danger of electric shock upon touching the filter if a fault occurs.

To achieve a protective ground connection for the filter:
- Ground the filter with a conductor of at least 10 mm2 cross-sectional area.
- Connect a second grounding conductor, using a separate ground terminal parallel to the protective conductor. (The cross section of each single protective conductor terminal must be sized for the required nominal load.)

## Installation method (example of single-phase 200 V class model)

- The mounting method is the same for the three-phase 200 V class model and the three-phase 400 V class model.

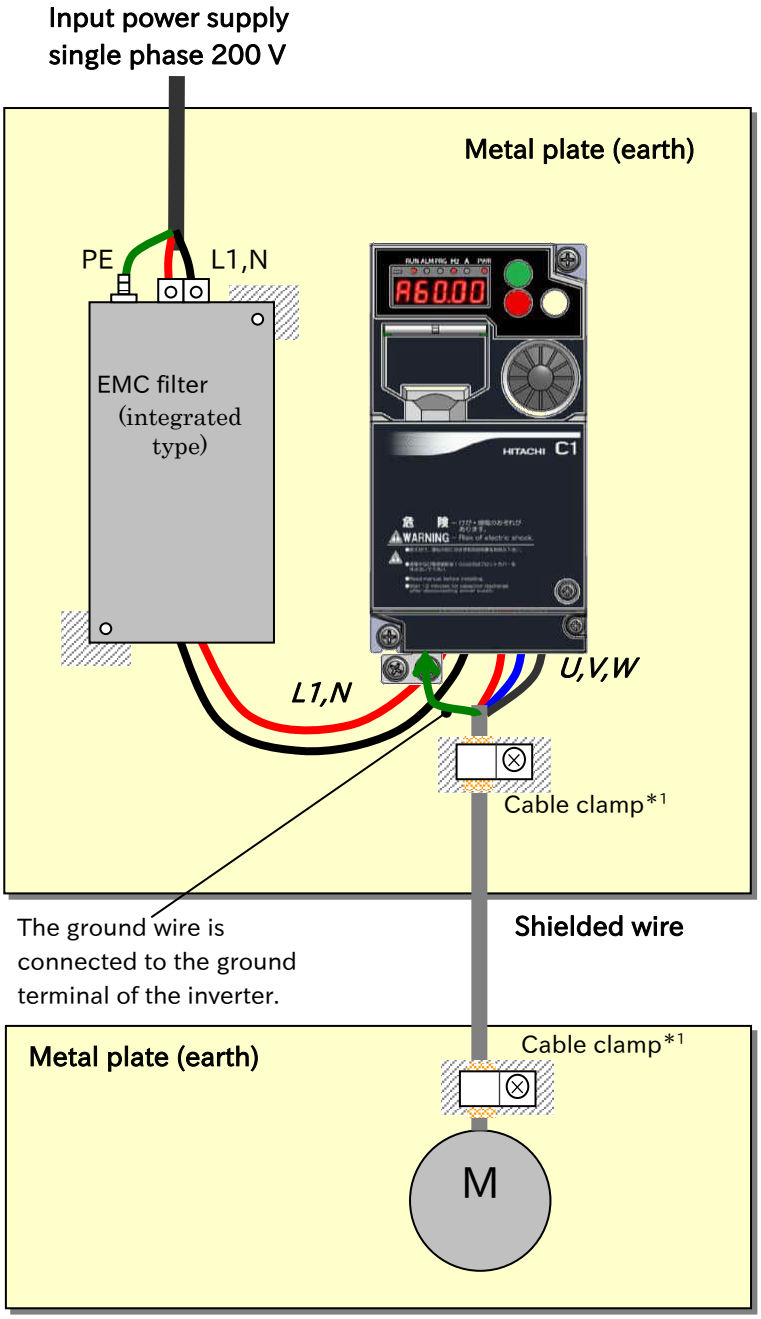


In case of shingle-phase 200V class model
The filter is integrated and mounted between the inverter and the metal plate.
Remove paint from the ground terminal, ensure sufficient contact area, and ground.
( ▨ part in the figure left)

*1. The ground at both ends of the shielded cable must be connected to ground with a cable clamp. From the viewpoint of harmonic current, the CE-mark (IEC 61000-3-2: 2018, IEC61000-3-4: 1998) requires an input-side AC reactor (ALI) or facility to suppress harmonic current. The noise terminal voltage and radiation noise pass even if the input-side AC reactor (ALI) is removed.

## 1.3.2 Caution for Machinery Directive (Functional Safety)

**CAUTION**

- **When using STO (Safe Torque Off) function, please be sure to read the "Safety function Guide" of separate!**
- WJ-C1 conforms to STO (Safe Torque Off) defined in Functional Safety EN 61800-5-2. When using the STO function, refer to "Safety Function Guide (NT3612*X)". Please contact your supplier or local Hitachi inverter sales office to download the guide.

## 1.3.3 Note of European Directive (CE)

- This product complies with the requirements of IEC 60364-4-41:2005/AMD1: 2017: Clause 411 "Protective measure: automatic disconnection of supply", since it complies with the requirements of IEC61800-5-1:2007+AMD1:2016:Clause 4.3.9.
- In order to comply with above mentioned requirements, installation must be in line with the conditions in "1.3 Compliance to European Directive (CE) " and "1.4 Compliance to UL Standards".
- Regarding IEC61800-5-1:Clause 5.2.3.6.3.3 "Short-circuit between phase terminals of power output and protective earth", circuitry in compliance test is as described as "Figure 13 – Example of short-circuit test between CDM/BDM d.c. link power output and protective earth" and "Class J 30A Non time delay fuse" is used as "OCPD" in "Fault loop".

# 1.4 Compliance to UL Standards

## 1.4.1 UL Cautions

This section summarizes the items required for UL standard compliant inverter installation.

GENERAL:
These Drives are open type AC Inverters with single or three phase input and three phase output. They are intended to be used in an enclosure. They are used to provide both an adjustable voltage and adjustable frequency to the AC motor. The inverter automatically maintains the required volts-Hz ration allowing the capability through the motor speed range. These are multi-rated devices and the ratings are selectable according to load types by operator with keypad operation and phase types by connection to supply mains.

Markings:
Maximum Surrounding Temperature:
- ND (Normal Duty): 50 deg C
- LD (Light Duty) : 40 deg C

Storage Environment rating:
- - 65 deg C (for transportation)

Instruction for installation:
- Pollution degree 2 environment and Overvoltage category 3

Electrical Connections:
- See section "5.2 Main Circuit Terminal" of user's guide.

Interconnection and wiring diagrams:
- See section "5.4 Control Circuit Terminal" of user's guide.

Short circuit rating and overcurrent protection device rating:
- C1-S series, C1-001SF to C1-022SF models.
  - [Non-semiconductor Fuses]
    Suitable for use on a circuit capable of delivering not more than 5,000 rms symmetrical amperes, 240 V maximum.
  - [Semiconductor Fuses]
    Suitable for use on a circuit capable of delivering not more than 100,000 rms symmetrical amperes, 240 V maximum.
- C1-L series, C1-001LF to C1-037LF models.
  - [Non-semiconductor Fuses]
    Suitable for use on a circuit capable of delivering not more than 5,000 rms symmetrical amperes, 240 V maximum.
- C1-L series, C1-055LF and C1-075LF models.
  - [Non-semiconductor Fuses]
    Suitable for use on a circuit capable of delivering not more than 5,000 rms symmetrical amperes, 240 V maximum.
- C1-L series, C1-110LF and C1-150LF models.
  - [Non-semiconductor Fuses]
    Suitable for use on a circuit capable of delivering not more than 5,000 rms symmetrical amperes, 240 V maximum.
- C1-L series, C1-001LF to C1-150LF models.
  - [Semiconductor Fuses]
    Suitable for use on a circuit capable of delivering not more than 100,000 rms symmetrical amperes, 240 V maximum.
- C1-H series, C1-004HF to C1-075HF models.
  - [Non-semiconductor Fuses]
    Suitable for use on a circuit capable of delivering not more than 5,000 rms symmetrical amperes, 480 V maximum.
- C1-H series, C1-110HF and C1-150HF models.
  - [Non-semiconductor Fuses]
    Suitable for use on a circuit capable of delivering not more than 5,000 rms symmetrical amperes, 480 V maximum.
- C1-H series, C1-004HF and C1-150HF models.
  - [Semiconductor Fuses]
    Suitable for use on a circuit capable of delivering not more than 100,000 rms symmetrical amperes, 480 V maximum.

Integral:
- Integral solid state short circuit protection does not provide branch circuit protection. Branch circuit protection must be provided in accordance with the National Electrical Code and any additional local codes.

Integral:
- Integral solid state short circuit protection does not provide branch circuit protection. Branch circuit protection must be provided in accordance with the Canadian Electrical Code, Part 1. (For Canada)

■ Field wiring conductor size and torque values making for wiring terminal

| Model | Screw Size | Required Torque (N・m) | Wire Rang (AWG/mm$^2$) |
|---|---|---|---|
| C1-001S | M3.5 | 1.0 | AWG16 (1.3 mm$^2$) |
| C1-002S | M3.5 | 1.0 | AWG16 (1.3 mm$^2$) |
| C1-004S | M3.5 | 1.0 | AWG16 (1.3 mm$^2$) |
| C1-007S | M4 | 1.4 | AWG12 (3.3 mm$^2$) |
| C1-015S | M4 | 1.4 | AWG10 (5.3 mm$^2$) |
| C1-022S | M4 | 1.4 | AWG10 (5.3 mm$^2$) |
| C1-001L | M3.5 | 1.0 | AWG16 (1.3 mm$^2$) |
| C1-002L | M3.5 | 1.0 | AWG16 (1.3 mm$^2$) |
| C1-004L | M3.5 | 1.0 | AWG16 (1.3 mm$^2$) |
| C1-007L | M3.5 | 1.0 | AWG16 (1.3 mm$^2$) |
| C1-015L | M4 | 1.4 | AWG14 (2.1 mm$^2$) |
| C1-022L | M4 | 1.4 | AWG12 (3.3 mm$^2$) |
| C1-037L | M4 | 1.4 | AWG10 (5.3 mm$^2$) |
| C1-055L | M5 | 3.0 | AWG6 (13 mm$^2$) |
| C1-075L | M5 | 3.0 | AWG6 (13 mm$^2$) |
| C1-110L | M6 | 3.9 to 5.1 | AWG4 (21 mm$^2$) |
| C1-150L | M8 | 5.9 to 8.8 | AWG2 (34 mm$^2$) |
| C1-004H | M4 | 1.4 | AWG16 (1.3 mm$^2$) |
| C1-007H | M4 | 1.4 | AWG16 (1.3 mm$^2$) |
| C1-015H | M4 | 1.4 | AWG16 (1.3 mm$^2$) |
| C1-022H | M4 | 1.4 | AWG14 (2.1 mm$^2$) |
| C1-030H | M4 | 1.4 | AWG14 (2.1 mm$^2$) |
| C1-040H | M4 | 1.4 | AWG12 (3.3 mm$^2$) |
| C1-055H | M5 | 3.0 | AWG10 (5.3 mm$^2$) |
| C1-075H | M5 | 3.0 | AWG10 (5.3 mm$^2$) |
| C1-110H | M6 | 3.9 to 5.1 | AWG6 (13 mm$^2$) |
| C1-150H | M6 | 3.9 to 5.1 | AWG6 (13 mm$^2$) |

Temperature rating of field wiring installed conductor:

- For models C1-001S, C1-002S, C1-004S, C1-007S, C1-015S, C1-001L, C1-004L, C1-007L, C1-015L, C1-004H, C1-007H, C1-015H, C1-022H, C1-030H and C1-040H
  - 60 degree C only.
- Except above models - 75 degree C only.

Field wiring Terminal marking for wire type:

- Use copper conductors only

## Required protection by Fuse

| Model | Non-Semiconductor Fuse | | | Semiconductor Fuse Manufacture: Cooper Bussmann LLC |
|---|---|---|---|---|
| | Type | Maximum Rating | | |
| | | Voltage | Current | |
| C1-001S | Class J, CC,G or T | 600 V | 3 A | FWH-10A14F |
| C1-002S | | | 6 A | FWH-15A14F |
| C1-004S | | | 10 A | FWH-15A14F |
| C1-007S | | | 20 A | FWH-60B |
| C1-015S | | | 30 A | FWH-60B |
| C1-022S | | | 30 A | FWH-60B |
| C1-001L | | 600 V | 3 A | FWH-10A14F |
| C1-002L | | | 6 A | FWH-15A14F |
| C1-004L | | | 10 A | FWH-15A14F |
| C1-007L | | | 15 A | FWH-25A14F |
| C1-015L | | | 15 A | FWH-25A14F |
| C1-022L | | | 20 A | FWH-60B |
| C1-037L | | | 30 A | FWH-60B |
| C1-055L | Class J, G or T | | 60 A | FWH-150B |
| C1-075L | | | 60 A | FWH-150B |
| C1-110L | Class J or T | | 80 A | FWH-200B |
| C1-150L | | | 80 A | FWH-200B |
| C1-004H | Class J, CC,G or T | 600 V | 6 A | FWH-15A14F |
| C1-007H | | | 10 A | FWH-25A14F |
| C1-015H | | | 10 A | FWH-25A14F |
| C1-022H | | | 10 A | FWH-25A14F |
| C1-030H | | | 15 A | FWH-25A14F |
| C1-040H | | | 15 A | FWH-25A14F |
| C1-055H | | | 30 A | FWH-60B |
| C1-075H | | | 30 A | FWH-60B |
| C1-110H | Class J, G or T | | 50 A | FWH-150B |
| C1-150H | | | 50 A | FWH-150B |

2

# Chapter 2 Outline of This User's Guide/Procedure for Operation

This chapter describes the applicable products, the knowledge required to read this Guide, the target readers of this Guide, the purpose of this Guide, the structure of the chapters in this Guide, and an outline of the procedure (flowchart) for operating the inverter.

**2.1 What Is Written in this User's Guide ..... 2-1-1**
2.1.1 Before Reading This Guide ..... 2-1-1
2.1.2 Overview of Each Chapter ..... 2-1-2
**2.2 Procedure for Operation (Flowchart) ..... 2-2-1**
2.2.1 When Installing a New Inverter ..... 2-2-1
2.2.2 When Replacing WJ200 (Old Model) with WJ-C1 ..... 2-2-3

# 2.1 What Is Written in this User's Guide

## 2.1.1 Before Reading This Guide

A

- The contents of this Guide apply to WJ-C1 main unit. Refer to the corresponding guide or instruction manuals for other products and optional parts.

- This Guide is meant to be read by those who have knowledge of electricity (certified electrician or equivalent) and those who are in charge of introduction, installation or connection of control equipment, system design and workplace management. This Guide is written in SI units.

- In this inverter, by turning on the "2nd-motor control [SET]" input terminal, some parameters used for motor control are switched from the 1st control parameter to the 2nd control parameter.
  In this Guide, annotations such as "[A001][*1]" are added to the parameter that has 2nd control parameter, and annotations such as ""2nd-motor control [SET]" target parameter. The second control parameter is also subject to setting." may be written at the bottom of the parameter table or page.
  In this case, both the 1st and 2nd control parameters are regarded as explanatory targets. (Both [A001] and [A201] are subject to "[A001][*1]".)
  Refer to "9.7.11 Switching Between Two Motors" for details on "2nd-motor control [SET]".
  If "1st-motor" or "2nd-motor" is explicitly described in the parameter name, only that parameter is subject to description.

- This Guide is intended to provide the following necessary information:
  (a) Installation and wiring of the product.
  (b) Parameter settings.
  (c) Conducting test run and operation.
  (d) Maintenance and inspection.

## 2.1.2 Overview of Each Chapter

- This Guide consists of the following chapters:
  Refer also to the chapter to be referred to for each part of the inverter appearance drawing on the next page.

| Chapter | | Overview |
|---|---|---|
| Chapter 1 | Safety Instructions/Risks | Describes safety precautions for installation, wiring, operation, maintenance, and inspection. |
| Chapter 2 | Outline of This User's Guide/ Procedure for Operation | Describes the people who will read this Guide and the purpose of this Guide. Also describes the overall flow from installation to test run, the flow chart for driving the motor, and related reference points. |
| Chapter 3 | Main Body of the Product | Describes the contents of the inspection at the time of purchase, the package, the product model, the contents of the specification label, and the appearance of the product. |
| Chapter 4 | Installation | Describes the installation of the inverter, installation environment and precautions for installation. |
| Chapter 5 | Wire Connection | Describes the wiring of the inverter and input power supply, the motor and applicable peripheral equipment, and the wiring of the I/O signals for control. |
| Chapter 6 | Operation Check/Residual Risk | Describes the residual risk checklist for inverter operation. |
| Chapter 7 | Keypad and Related Functions | Describes how to operate the main unit keypad and related functions. |
| Chapter 8 | Mandatory Setting for Motor Drive and Test Run | Describes the settings required to drive the motor and test run. |
| Chapter 9 | Inverter Functions | Describes the functions available with the inverter. |
| Chapter 10 | Monitor Functions | Describes various data that can be monitored by keypad, remote operator, etc. |
| Chapter 11 | RS485 Communication | Describes the communication function using Modbus-RTU(RS485) communication. For the coil/ register number used by Modbus communication, see "Chapter 18 List of Parameters/ Modbus Coil/Register Numbers". |
| Chapter 12 | ProDriveNext/EzSQ | Describes the outline what can be done by connecting WJ-C1 to a computer. |
| Chapter 13 | Option Board | Describes applicable option boards. |
| Chapter 14 | Safety Function STO | Describes an overview of using the safety function STO. |
| Chapter 15 | Tips/FAQ/Troubleshooting | Describes the inverter error status, warning status, and troubleshooting. |
| Chapter 16 | Maintenance and Inspection | Describes how to perform maintenance and inspection. |
| Chapter 17 | Specifications/Dimensions/Derating | Describes the specifications and dimensions of this product and current derating characteristics. |
| Chapter 18 | List of Parameters/Modbus Coil/ Register Numbers | Describes the monitor and parameter list. Coil/register numbers for Modbus communication are also described in this chapter. |
| Appendix | Additional technical information, glossary, index, revision history, etc. | The following contents are described. "Replacement from WJ200", "Glossary", "Index", "Revision History", etc. |

## What this Guide explains.

**Chapter 2 Outline of This User's Guide/ Procedure for Operation (this chapter)**
- Provides an overview of required procedures and the chapters to be referred before test run in flowchart form.

**Chapter 3 Main Body of the Product**
- Describes the package, specification label, appearance, and name of each part of the product.

**Chapter 4 Installation**
- Describes the installation of the product.

**Chapter 7 Keypad and Related Functions**
- Explains how to operate the inverter.

**Chapter 8 Mandatory Setting for Motor Drive and Test Run**
- Describes the settings required to drive the motor and test run.

**Chapter 9 Inverter Functions**
- Describes the functions that can be performed with the inverter.

**Chapter 10 Monitor Functions**
- Describes various data that can be monitored by the inverter.

**Chapter 12 ProDriveNext/EzSQ**
- Provides an overview of what can be done by connecting to a computer.

**Chapter 13 Option Board**
- Describes the supported option boards.

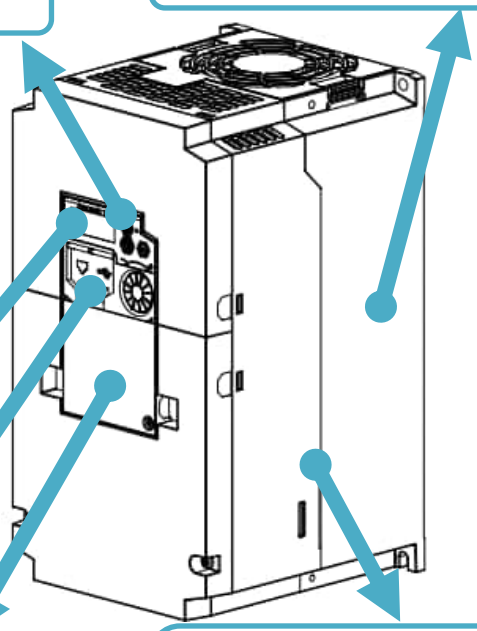

**Chapter 17 Specifications/Dimensions/Derating**
- Describes the inverter specifications, external dimensions and current derating characteristics.

**Chapter 5 Wire Connection**
- Describes the wirings of the power line, motor line and optional device such as reactor and braking resistor to the main circuit terminal block.
- Also describes the wiring of the I/O contacts, relay output, analog I/O and so on to the control circuit terminal block.

**Chapter 6 Operation Check/Residual Risk**
- Describes residual risks during operation and the items to be checked.

**Chapter 11 Modbus Communication**
**Chapter 14 Safety Function STO**
- Describes detailed information when Modbus communication and safety function STO are used.
- For the wiring, also refer to "5.4 Control Circuit Terminal".

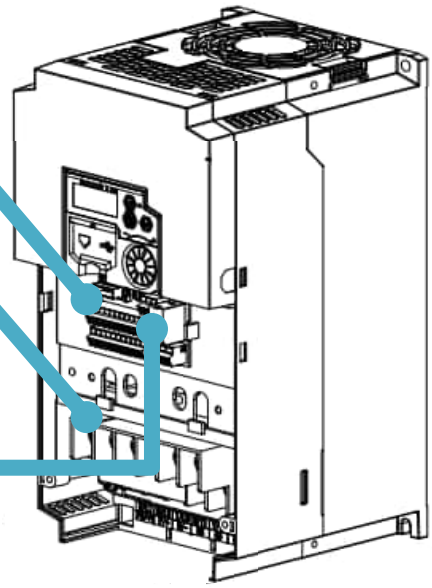

**Chapter 15 Tips/FAQ/Troubleshooting**
- Describes the countermeasures for trip and warning occurrence.

**Chapter 16 Maintenance and Inspection**
- Describes maintenance and inspection, such as daily inspection.

# 2.2 Procedure for Operation (Flowchart)

## 2.2.1 When Installing a New Inverter

- The flowchart below shows an outline of the procedures of installing, wiring, test run and various settings in case installing a new WJ-C1 (when it is not replaced with the old model WJ200).
  The overview of each item in the flowchart and the main sections that describe the details are shown in the right column.

| | For new installation | Overview of the checks and main reference section |
|---|---|---|
| 1 | Confirmation of safety | Check the precautions necessary for handling the inverter.<br>"Chapter 1 Safety Instructions/Risks" |
| 2 | Checking the inverter | Check that there are no problems with the model, enclosed items, appearance, etc. of the inverter you purchased.<br>"3.1 Confirmation at the Time of Purchase" |
| 3 | Installation of inverter | Check the status and environment of the inverter installation.<br>"Chapter 4 Installation" |
| 4 | Wiring and checking main circuit terminals | Wire the power supply, motor, applicable peripheral device (work only when necessary), etc. to the main circuit terminal block of the inverter and check if the wiring to the inverter is correct.<br>"5.2 Main Circuit Terminal"<br>"5.3 Applicable Peripheral Device" |
| 5 | Wiring and checking the control circuit terminals | Wire I/O signals and analog I/O signals to the control terminal of the inverter and check if the wiring to the inverter is correct.<br>"5.4 Control Circuit Terminal"<br>"9.15 Functions with External Signal Input"<br>"9.16 Functions with External Signal Output" |
| 6 | Checking how to use keypad | Check how to use keypad, and then change the parameter settings or monitor in the following steps.<br>"7.1 How to Use Keypad" |
| 7 | Setting mandatory parameters for operating the motor and inverter | Set the load rating of the inverter according to the load.<br>Set the basic data of the motor and protection settings such as electronic thermal, etc. according to the motor specifications to be driven.<br>"8.1 Mandatory Setting for Operation" |
| 8 | Selecting control mode | Set the control mode according to the characteristics of the load machine.<br>"9.5 Selecting Control Mode for the Motor and Load" |

To the next page

From the previous page

| | | |
|---|---|---|
| 9 | Test run without load | To check if there is a basic problem with the inverter or motor, connect only the motor and rotate it with no load to check if it rotates properly.<br>"8.2.1 Test Run by Connecting Only the Motor" |
| 10 | Check if auto-tuning is required. | It is necessary to perform auto-tuning when using automatic torque boost, sensorless vector control, or when using a motor whose motor constant is unknown.<br>"8.3 Carrying Out Motor Auto-tuning" |
| 11 | Test run with actual load | Perform a test run to confirm that there is no problem with the operation by connecting the mechanical system.<br>"8.2.2 Perform a Test run With a Machine Load" |
| 12 | Selecting RUN command source<br><br>(a) Running with keypad's RUN-key<br>(b) Running with forward/reverse RI/O input signals<br>(c) Running with push button (automatic return contact)<br>(d) Select other RUN commands | Set RUN command source of the inverter.<br>See the following sections respectively:<br>(a) "9.1.2 Operation by RUN Key on the Keypad"<br>(b) "9.1.3 Operation by Forward/Reverse Input Terminals"<br>(c) "9.1.4 Operation by Pushbutton (Momentary Switch) Input"<br>(d) For other RUN commands and related functions, refer to "9.1.1 Types of RUN command" and refer to the section in which the run command method suitable for the purpose is described. |
| 13 | Selecting the frequency command source<br><br>(a) Set the frequency with keypad<br>(b) Set the frequency with analog voltage input by connecting a variable resistor<br>(c) Set the frequency with analog current input<br>(d) Switch the frequency in multi-speed by combinations of I/O input ON/OFF<br>(e) Select other frequency reference | Set the frequency command source of the inverter.<br>See the following sections respectively:<br>(a) "9.2.2 Setting Frequency Command by Keypad"<br>(b),(c) "9.2.3 Setting Frequency Command by Analog Inputs (Voltage/Current)"<br>(d) "9.2.4 Setting Frequency Command by Multi-Speed Operation Function"<br>(e) For other frequency commands and related functions, refer to "9.2.1 Types of Frequency Command" and refer to the section in which the frequency command method suitable for the purpose is described. |
| 14 | Setting various parameters for operation | Set various parameters related to the required functions by referring to "Chapter 9 Inverter Functions". |

## Tips for setting parameter

- If the parameter you want to set is not displayed or the parameter cannot be changed, refer to "7.2 Functions Related to Keypad" to check if any restrictions have been applied.
- If the inverter does not operate as intended after setting several parameters, refer to "15.4 How to Check When Something Is Wrong" to deal with it.
- If possible, consider initializing the parameters. In this case, see "7.2.2 Initialize the Parameters". (However, it is recommended to back up parameters and EzSQ programs with inverter configuration software "ProDriveNext", etc. prior to parameter initialization.)

## 2.2.2 When Replacing WJ200 (Old Model) with WJ-C1

- Even when replacing WJ200 (old model) with a WJ-C1, the basic steps up to operation are the same as when installing a new one.
- The following is an overview of the procedures for replacing the inverter, assuming that the input/output signals of the control circuit terminals and other functions are the same as before. (As there are some differences in functions and control characteristics, be sure to check the differences and check the operation by test run by referring to "Appendix A.1 Replacement from WJ200".)

| Replacing WJ200 with WJ-C1 | | Overview of the checks and main reference sections |
|---|---|---|
| 1 | Confirmation of safety | Check the precautions necessary for handling the inverter.<br>"Chapter 1 Safety Instructions/Risks" |
| 2 | Checking the inverter | Check that there are no problems with the model, enclosed items, appearance, etc. of the inverter you purchased.<br>"3.1 Confirmation at the Time of Purchase" |
| 3 | Checking the installation environment, external dimensions and installing the inverter | Check the user's guide, instruction manual, etc. of each device to be replaced, and confirm the differences in installation dimensions, external dimensions, installation environment, etc., and install the product correctly.<br>"Chapter 4 Installation"<br>"Appendix A.1.1 Comparison of External Dimensions and Mounting Dimensions" |
| 4 | Checking and replacing main circuit wiring<br><br>Checking and replacing control circuit wiring | Wire the main circuit terminal block wirings and control terminal wirings removed from WJ200 (old model) to the main circuit terminal block and control terminal on WJ-C1. At this time, be careful not to mistake the connection place. Since wiring positions will change, check the contents of the following sections thoroughly before wiring.<br>"Chapter 5 Wire Connection"<br>"Appendix A.1.2 Comparison of Main Circuit Terminal Block"<br>"Appendix A.1.3 Comparison of Control Circuit Terminal Block" |
| 5 | Checking how to use keypad | Check how to use keypad of WJ-C1, and then change the parameter settings or monitor in the following steps.<br>"7.1 How to Use Keypad" |
| 6 | Checking the setting parameters from WJ200 to WJ-C1 and copying the data | WJ-C1 is designed to be upwardly compatible with WJ200 Ver. 3.2. To copy parameters, the remote operator WOP or the setup software "ProDriveNext" can be used. See the following section for more information.<br>"Appendix A.1.4 Data Copy from WJ200 to WJ-C1"<br>Some behaviors are different between WJ200 and WJ-C1. See the following section for more information.<br>"Appendix A.1.5 Comparison of Functions of WJ200 and WJ-C1" |
| 7 | Performing test run, various adjustments, parameter settings for functions to be used, etc. | Follow the procedure from step No. 7 in "2.2.1 When Installing a New Inverter" to make basic settings for the motor, test run with no load, test run with actual load, and set various parameters. |

To No. 7 in "2.2.1 When Installing a New Inverter

(Memo)

3

# Chapter 3 Main Body of the Product

This chapter describes the main body of the product. The inspection at the time of purchase, the items included in the product, the explanation of the product model name, the details of the specification label, the appearance of the product and the names of each part are described.

**3.1 Confirmation at the Time of Purchase ..... 3-1-1**
3.1.1 Checking the Product and the Included Items ..... 3-1-1
3.1.2 Model of the Product and Specification Label ..... 3-1-2
**3.2 Appearance of the Product and Part Name ..... 3-2-1**
3.2.1 Appearance of Each Model ..... 3-2-1
3.2.2 Part Names and Descriptions on the Front of the Product ..... 3-2-4
3.2.3 Connecting Remote Operator ..... 3-2-5

# 3.1 Confirmation at the Time of Purchase

## 3.1.1 Checking the Product and the Included Items

Q
- What should be checked after purchase?
- What's included with the product?

A
- The following items are included in the package.
- If you find any faults or defects in the product or have any question about the product, please contact your supplier or local Hitachi inverter sales office.

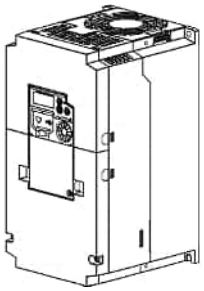

WJ-C1 inverter: 1 unit

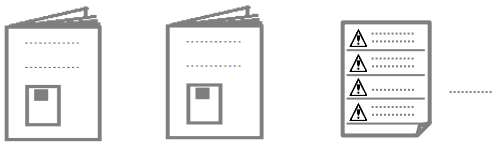

- 1 × WJ-C1 Basic Guide
- 1 × WJ-C1 Safety Function Guide Caution
- 1 × Caution reminder stickers (multilingual)

(Others, which are a correction error table/supplementary instruction manual, etc., may be included.)

| Confirmations at unpacking |
|---|
| ☑ When unpacking, check that the package contains ·1 inverter main unit, ·1 Basic Guide, and other included items. |
| ☑ Check the specification label again to confirm that the product is the one you have ordered. |
| ☑ Check the product for damage (including falling of parts and dents in the inverter body) caused during transportation. |

**Caution**
- Applying a different inverter voltage class or motor rated voltage from the specified input power voltage may lead to damage to your inverter or motor burnout.

**Do**
- Check with the specification label to be sure that the inverter voltage class is correct.

!
- The User's Guide (this document) is not included in the product. To get the latest version of the WJ-C1 User's Guide, please contact the supplier where this device was purchased.
- If you use the inverter with optional products, you should also read the instruction manuals enclosed with those products.
- Note that the Basic Guide and the instruction manuals for each optional product to be used should be delivered to the end user of the inverter. For the User's Guide and instruction manual, please contact your supplier or local Hitachi inverter sales office.

## 3.1.2 Model of the Product and Specification Label

**Q**

- How to read a model number.
- What's written on the specification label?

**A**

- The model of the product is as follows. Check that the model is same as you ordered.

WJ series type name

| | | | | | | |
|---|---|---|---|---|---|---|
| Example 1: Single-phase 200 V class 0.4 kW (for Japan) | C1 | - | 004 | S | F | |
| Example 2: Three-phase 200 V class 7.5 kW (for North America) | C1 | - | 075 | L | F | U |
| Example 3: Three-phase 400 V class, 15 kW (for Europe) | C1 | - | 150 | H | F | E |

Applicable motor output
001: 0.1 kW to 150: 15 kW

Input power specifications
S: Single-phase 200 V, L: Three-phase 200 V
H: Three-phase 400 V

F: With operator keypad

Region:
None: Japan, E: Europe, U: North America, C: China

**A**

- The model of the product is indicated on the specification label on the side of the product body. The details on the specification label are as follows.

Example of three-phase 200 V class 0.1 kW (for Japan)

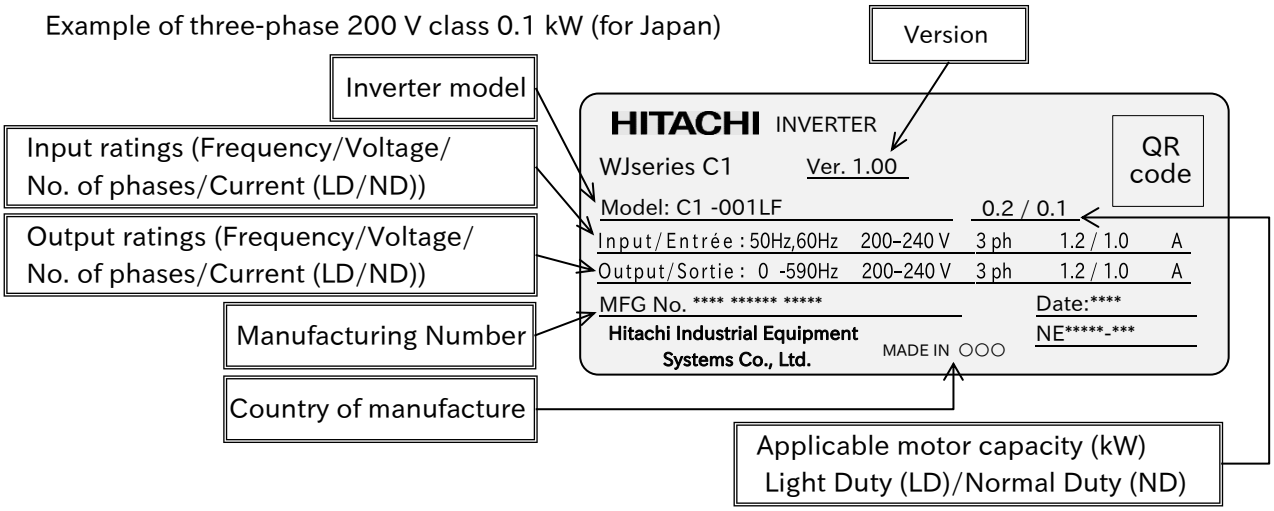


**!**

- In this Guide, some indications may be omitted from the model name. In that case, the omitted indications are not concerned with the description.
- The input and output currents on the specification label are UL certified current values.
- The "***" part of the label above shows the product-specific values.
- For version 2, refer to the "WJ series C1 User's Guide for Extended Mode(NT363*X)".

# 3.2 Appearance of the Product and Part Name

## 3.2.1 Appearance of Each Model

Q

- How to check the appearance and name of each part?

A

- The appearance of the product and the names of its parts are shown below for each model.

### Single-phase 200 V class: C1-001SF/002SF/004SF
### Three-phase 200 V class: C1-001LF/002LF/004LF/007LF

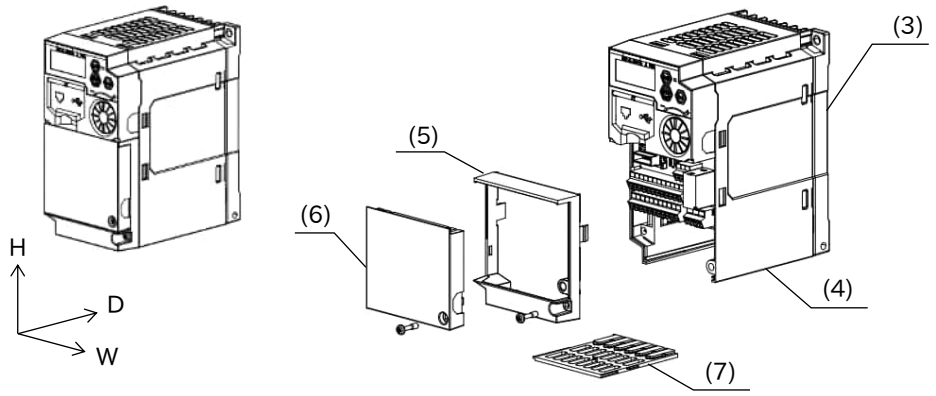


* The W and H dimensions are the same, but the D dimensions differ depending on the model due to the difference of the cooling fin.

### Single-phase 200 V class: C1-007SF/015SF/022SF
### Three-phase 200 V class: C1-015LF/022LF
### Three-phase 400 V class: C1-004HF/007HF/015HF/022HF/030HF

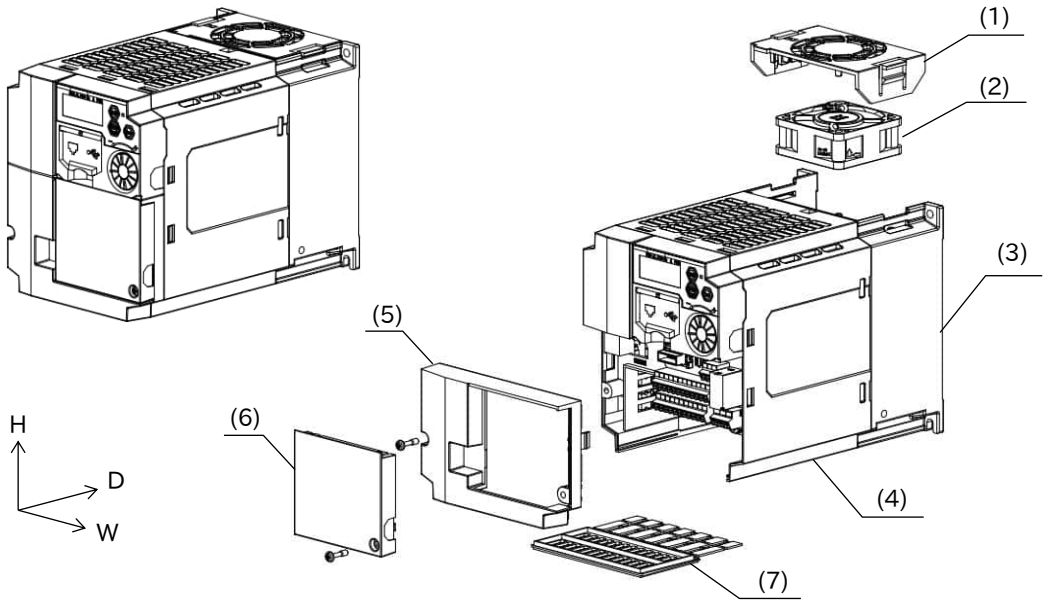


* The W and H dimensions are the same, but the D dimensions differ depending on the model due to the difference of the cooling fin.
* C1-007SF and C1-004HF do not have a cooling fan and a cooling fan cover.

(1) Cooling fan cover
(2) Cooling fan
(3) Cooling fin
(4) Main body cover
(5) Terminal block cover
(6) Control terminal cover
(7) Backing plate

■ Three-phase 200 V class: C1-037LF
Three-phase 400 V class: C1-040HF

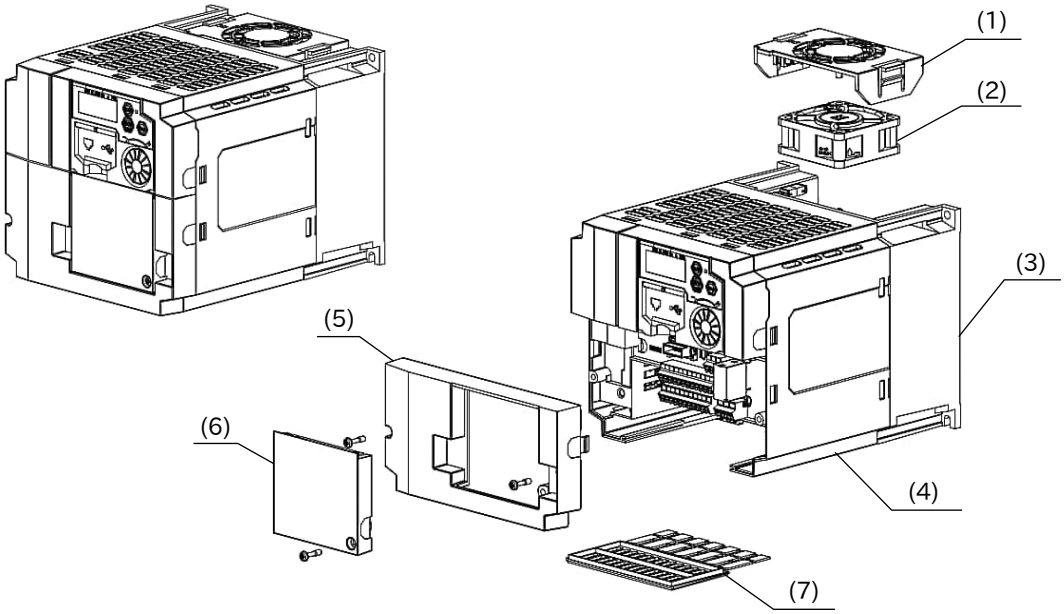


■ Three-phase 200 V class: C1-055LF/075LF
Three-phase 400 V class: C1-055HF/075HF

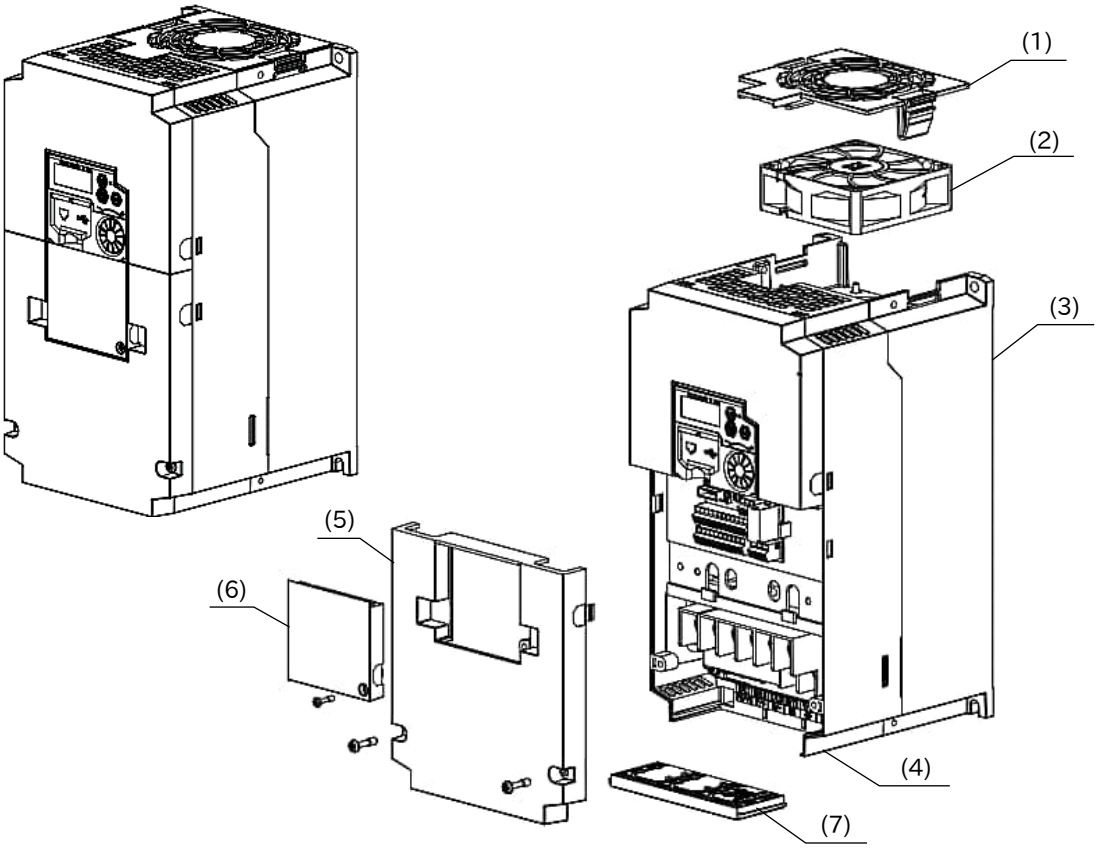


(1) Cooling fan Cover
(2) Cooling fan
(3) Cooling fin
(4) Main body cover
(5) Terminal block cover
(6) Control terminal cover
(7) Backing plate

## Three-phase 200 V class: C1-110LF
## Three-phase 400 V class: C1-110HF/150HF

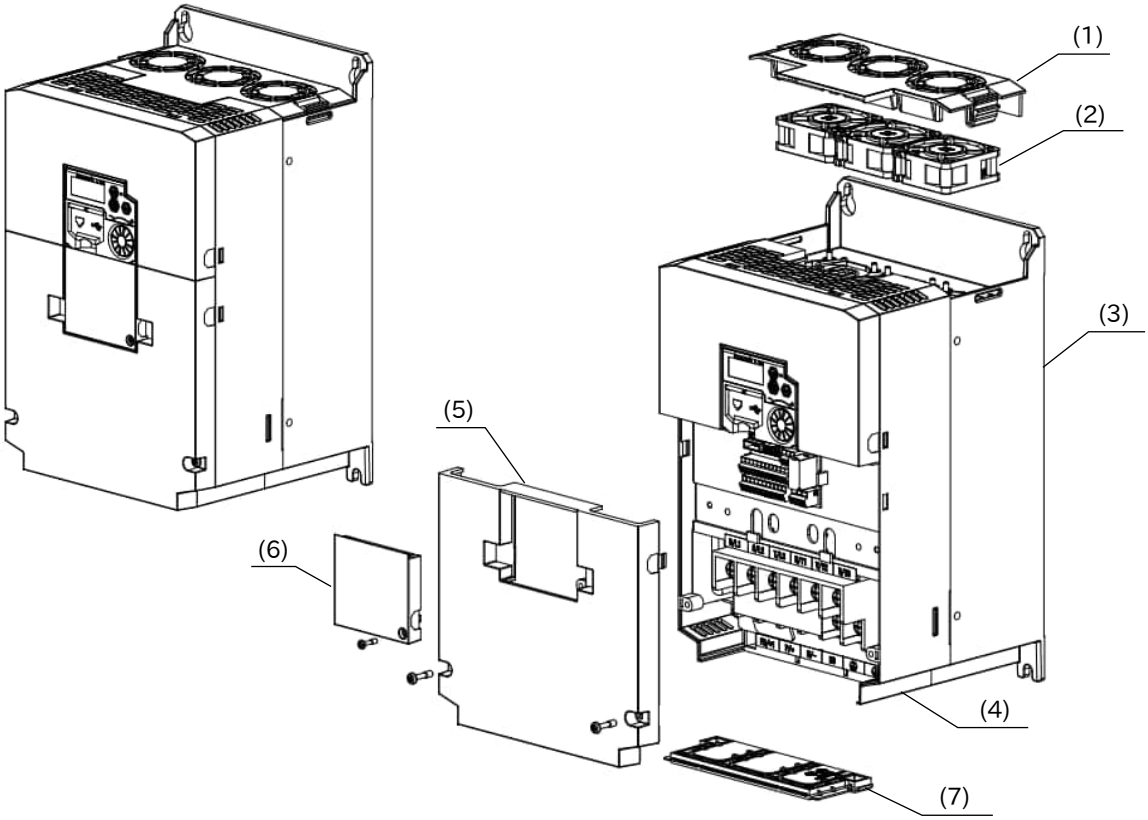


## Three-phase 200 V class: C1-150LF

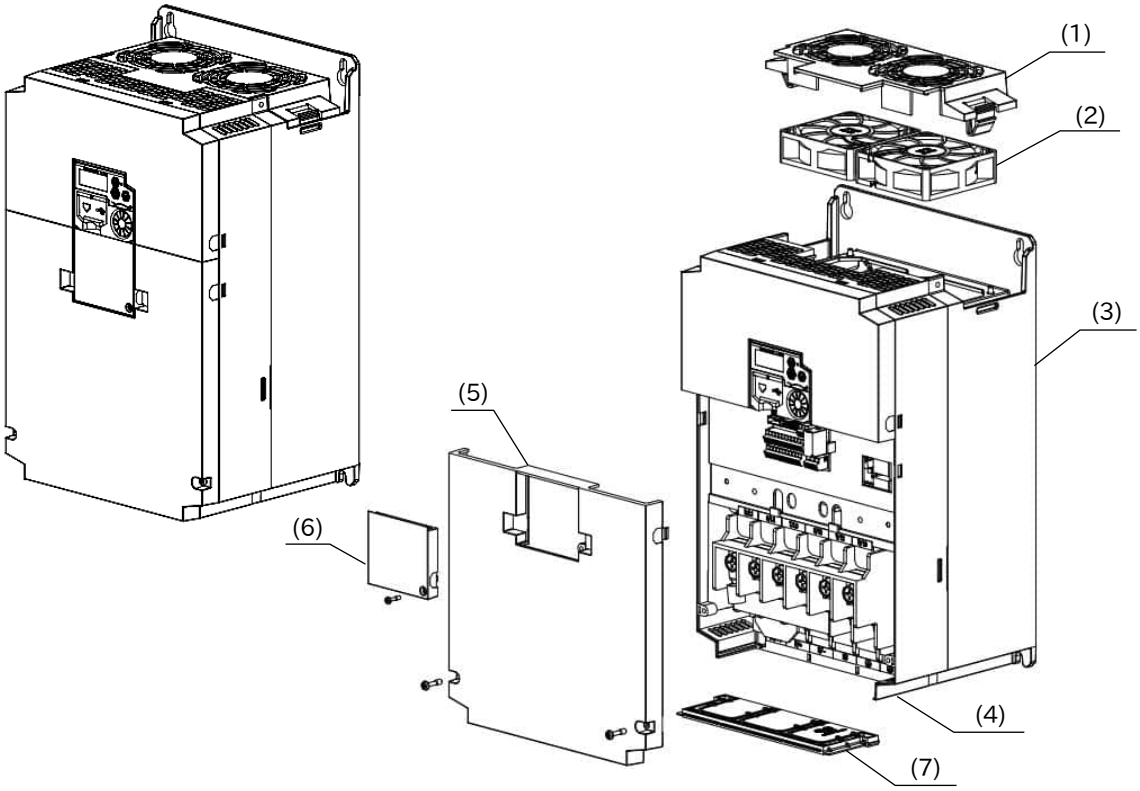


(1) Cooling fan cover
(2) Cooling fan
(3) Cooling fin
(4) Main body cover
(5) Terminal block cover
(6) Control terminal cover
(7) Backing plate

## 3.2.2 Part Names and Descriptions on the Front of the Product

A

- The appearance from the front of the product without the terminal cover and the names of the parts are shown below.

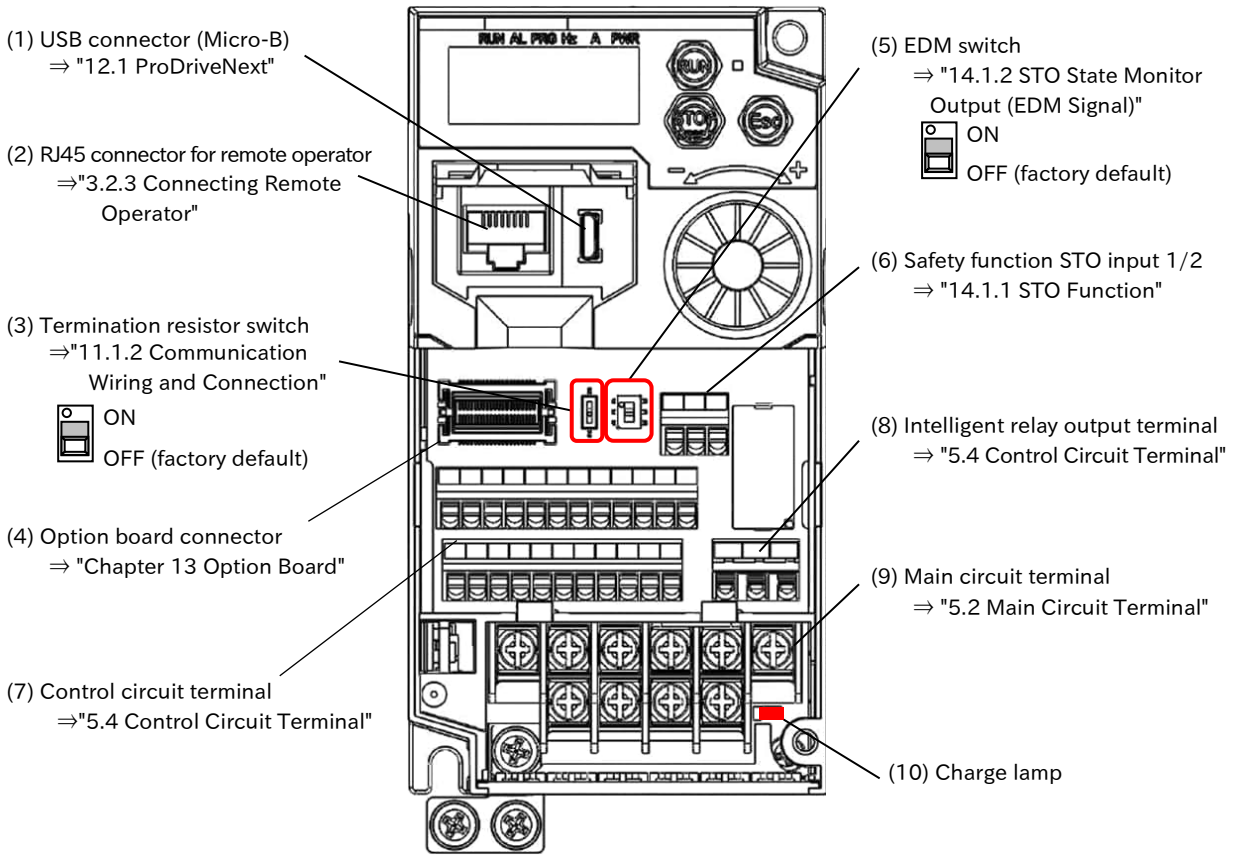


| Name | Description |
|---|---|
| (1) USB connector | USB connector (Micro-B) for connecting to a PC. (Only when inverter configuration software ProDriveNext and EzSQ function are used.) |
| (2) RJ45 connector for remote operator | Connector for connecting the optional external remote operator (OPE-SR, OPE-SBK, OPE-SRmini, WOP). |
| (3) Termination resistor switch | Termination resister switch for the RS485 communication terminal on the control terminal. When turned on, the built-in resistor (120Ω) is connected. |
| (4) Option board connector | Connector for mounting option board. |
| (5) EDM function switch | Turn ON in case of using the EDM output of the safety function.<br>Be sure to turn off the power before switching ON/OFF. (Refer to section 14.1.2.) |
| (6) Safety function STO input 1/2 | Terminal block for input signals of safety function. (Refer to section 14.1.1.) |
| (7) Control circuit terminal | Terminal block for connecting various digital/analog input/output signals for inverter control. |
| (8) Intelligent relay output terminal | 1c contact terminal block for intelligent relay output. |
| (9) Main circuit terminal | Terminal block for connecting the inverter main power supply, motor output, braking resistor, etc. |
| (10) Charge lamp (Charging indicator lamp) | This lamp lights when the main circuit DC voltage (between [P/+] terminal and [N/-] terminal) is approximately 45 VDC or more even after the power supply is shut off. The voltage does not necessarily run out even if the charge lamp goes off. When changing the wiring, wait for 10 minutes or more after shutting off the power, and check that there is no residual voltage between [P/+] and [N/-] terminals by using a tester or other instrument to confirm safety. |

* Refer to "7.1 How to Use Keypad" for the displays and keys on the keypad.
* The position of the (10) charge lamp depends on the model. Refer to "5.2.3 Arrangement of Main Circuit Terminal Block" for the positions of each model.
* Please note that operation is also possible from the inverter main unit when driving from a PC via USB.
* Disconnect the power supply before connecting or disconnecting the remote operator (OPE-SRmini, etc.) to or from the (2) RJ45 connector for remote operator.

## 3.2.3 Connecting Remote Operator

Q

- How to operate the inverter by putting operator keypad on the front of the control panel on which the inverter is installed?

A

- Connecting the optional remote operator (OPE-SR, OPE-SBK, OPE-SRmini, WOP) enables operation from outside the panel.
- It is recommended to use the connector cable option ICS-1 (1 m) or ICS-3 (3 m) to connect the inverter main unit and the remote operator.

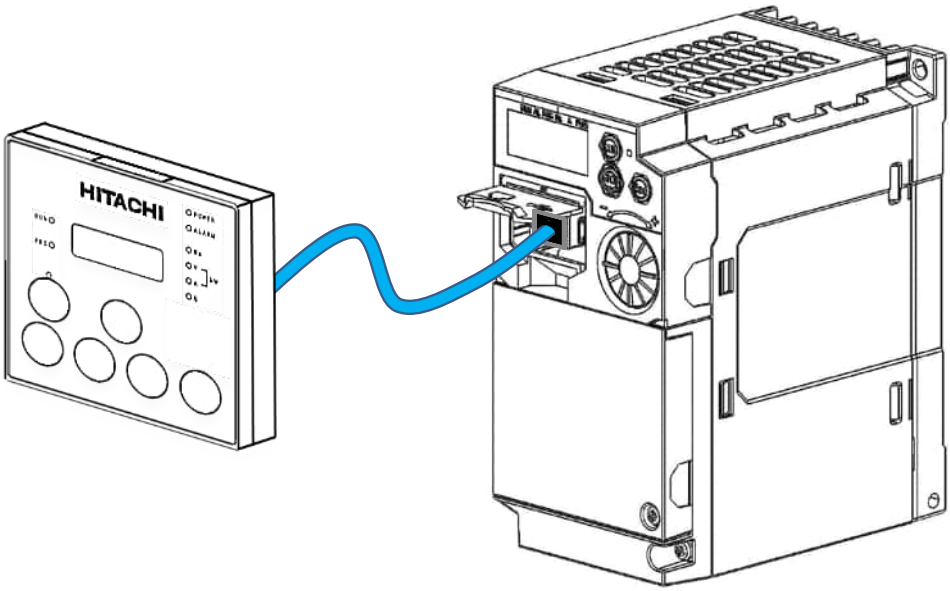


!

- Use a connector cable within 3 m. If the cable is more than 3 m, it may cause malfunctioning.
- Do not connect or disconnect the remote operator while the inverter is energized.

4

# Chapter 4 Installation

This chapter describes the instruction of the inverter.
When performing each work, carefully read "Chapter 1 Safety Instructions/Risks" and the corresponding chapters, and pay attention to safety.

**4.1 Installation Environment ..... 4-1-1**
4.1.1 Installation Precautions ..... 4-1-1

# 4.1 Installation Environment

## 4.1.1 Installation Precautions

Q

- What are the precautions when installing the inverter?

A

- When installing the inverter, be sure to observe the following precautions.

### ◆ Transportation

- Plastic parts are used for the inverter. When carrying the inverter, handle it carefully to prevent damage to the parts.
- Do not carry the inverter by holding the keypad or terminal block cover. Doing so may cause the inverter to fall.
- Do not install and operate the inverter if it is damaged or parts are missing.

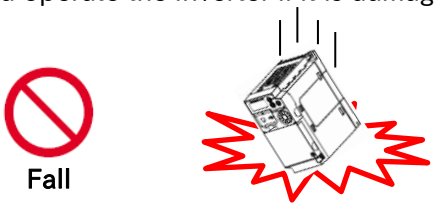


### ◆ Ambient temperature

- Avoid installing the inverter in a place where the ambient temperature goes above or below the allowable range, as defined by the standard inverter specification.

* Temperature requirements vary depending on the "Load type selection [b049]". In addition, current derating may be required. For details, refer to "Chapter 17 Specifications/Dimensions/Derating".

- Leave sufficient space around the inverter. Measure the temperature in a position about 5 cm from the bottom-center point of the inverter, and check that the measured temperature is within the allowable range. Operating the inverter at a temperature outside this range will shorten the inverter life (especially the capacitor life).

## ◆ Humidity

- Avoid installing the inverter in a place where the relative humidity goes above or below the allowable range (20 to 95% RH), as defined by the standard inverter specification. Especially, use the product in a place where there is no condensation.

- Condensation inside the inverter will result in short circuits and malfunctioning of electronic parts. Also avoid installing the product in a place exposed to direct sunlight.

## ◆ Ambient air

- Avoid installing the inverter in a place where the inverter will be subject to dust, water drops, corrosive gases, explosive gases, flammable gases, grinding fluid mist, or salt water.

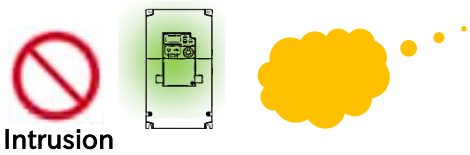


- Foreign particles entering the inverter will cause it to fail. If you use the inverter in a considerably dusty environment, install the inverter inside a sealed enclosure.

## ◆ Installation method and position

- Install the inverter firmly and vertically with screws or bolts on a surface that can withstand the inverter weight and is free from vibrations.

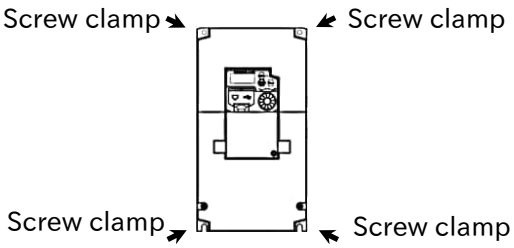


- If the inverter is not installed vertically, its cooling performance may be degraded and tripping or inverter damage may result.

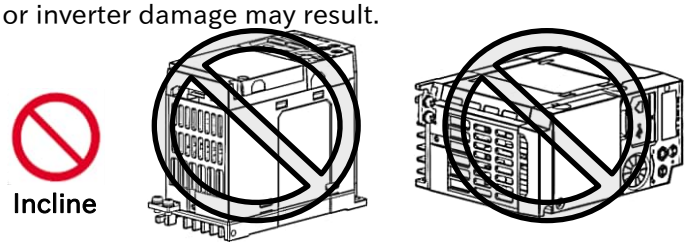

## ◆ Mounting in an enclosure

- When mounting multiple inverters in an enclosure with a ventilation fan, carefully design the layout of the ventilation fan, air intake port, and inverters. An inappropriate layout will reduce the inverter-cooling effect and raise the ambient temperature. Pay close attention so that the ambient temperature of the inverter is within the allowable operating temperature range.
  If a ventilation fan is located directly above the inverter, dust or dirt may drop on it. To prevent this, move the inverter horizontally to a suitable position.

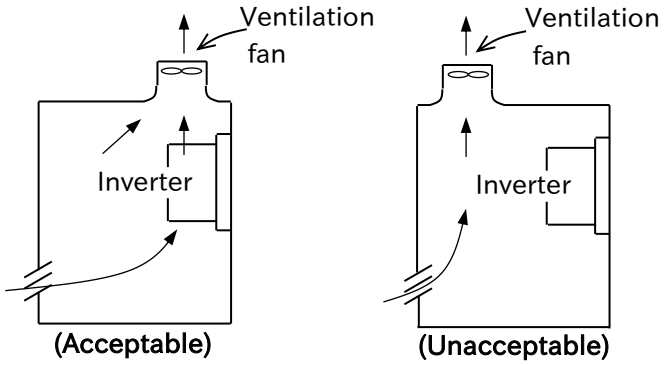


Position of ventilation fan

## Calorific value of the inverter

For the calorific value of the inverter, refer to the power losses listed in https://ecodesign.hitachi-industrial.eu/.

(1) By accessing the above URL, the "ENERGY EFFICIENCY CERTIFICATES" page is displayed.
(2) Select WJ-C1 from the above-mentioned web site. WJ-C1 model list appears.
(3) Click the model for which you want to know the power loss. The following PDF file will be displayed with the loss of each model.

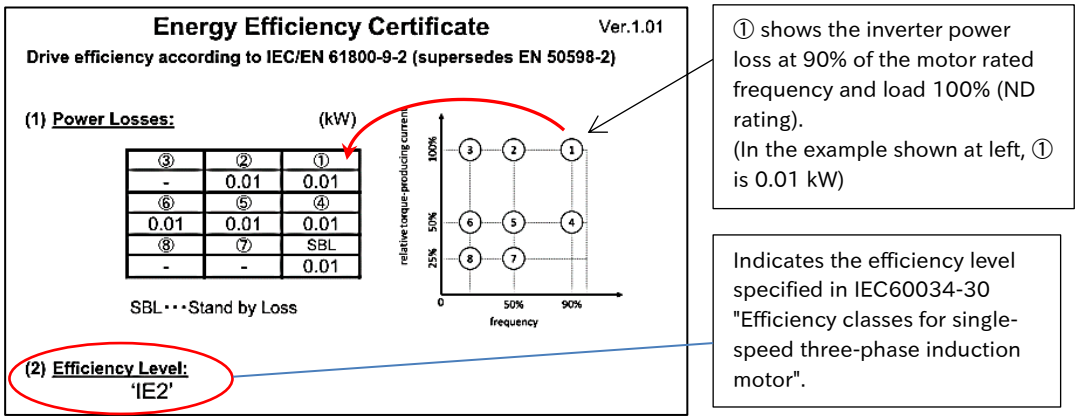


(4) The inverter losses at each point shown by the numbers on the Output Frequency vs. Load Factor (ND Rating) graph at the right of the figure above are shown in the table on the left.
(5) Calculate the calorific value based on the inverter operation status and generated loss.

## ◆ Surface on which to install the inverter

- The inverter will reach a high temperature (up to about 150˚C) during operation. Install the inverter on a vertical wall surface made of nonflammable material (e.g., metal) to avoid the risk of fire.

- Leave sufficient space around the inverter. Keep sufficient distance between the inverter and other heat sources (e.g., braking resistors and reactors) so that the heat discharged from the heat sources does not affect the inverter.

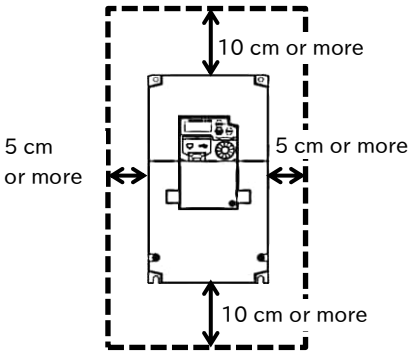


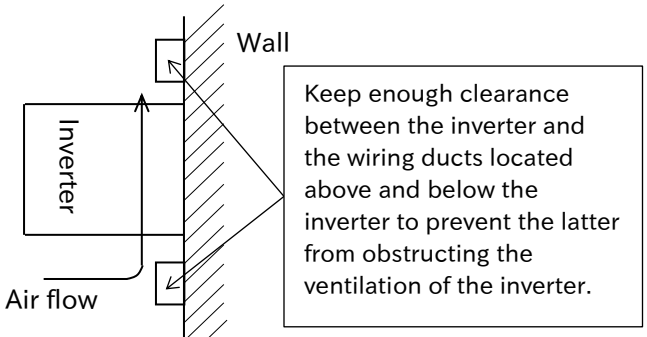


* For the inverter dimensions, refer to "17.2 External Dimensions".

- It is also possible to install multiple inverters side by side in the panel. In this case, the ambient temperature of the installation site should be 40˚C or less, and derating is required for the carrier frequency and output current. Refer to "17.3 Current Derating" for details.

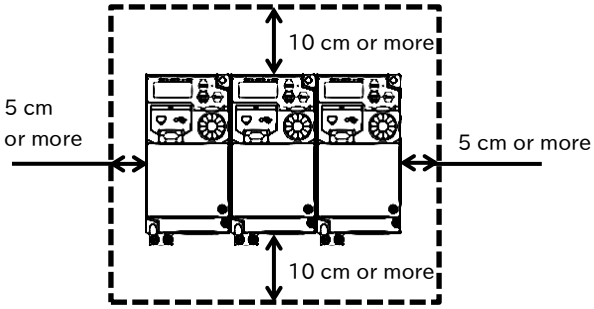


* Even in case WJ-C1 and WJ200 series are installed together, leave enough clearance around them as shown on the left. Also, follow the current derating of each model.

## ◆ Installing the option board for WJ200 series

- Option boards for WJ200 series are available for WJ-C1. However, the depth is increased by 10 mm for some models.
  Please check in advance if it fits inside the panel at the time of replacement, etc.
  For more information, refer to "13.1 Using Option Board for WJ200 Series".

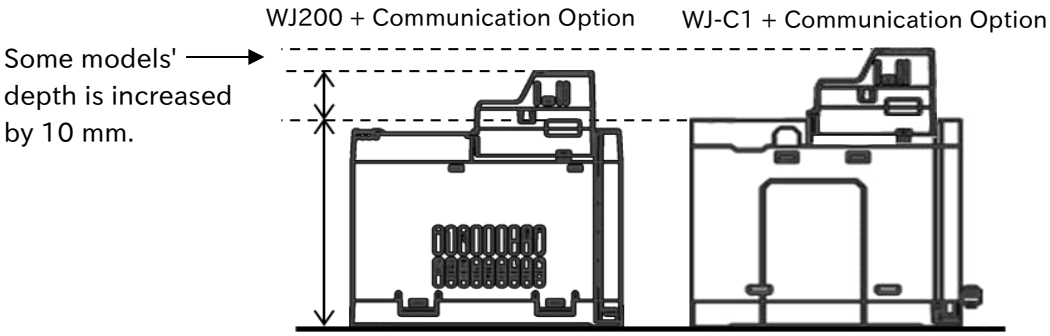

(Memo)

5

# Chapter 5 Wire Connection

This chapter describes the wirings of the power supply to the main circuit terminal block of the inverter, motor and peripheral options, and the analog and digital input/ output signal wirings to the control circuit terminal block. When performing each work, carefully read "Chapter 1 Safety Instructions/Risks" and the corresponding chapters, and pay attention to safety.

**5.1 Remove the Terminal Block Cover ..... 5-1-1**

**5.2 Main Circuit Terminal ..... 5-2-1**

5.2.1 Configuration of Main Circuit Terminal ..... 5-2-1

5.2.2 Wiring the Power Supply and Motor ..... 5-2-2

5.2.3 Arrangement of Main Circuit Terminal Block ..... 5-2-6

**5.3 Applicable Peripheral Device ..... 5-3-1**

5.3.1 Overview of Applicable Peripheral Devices ..... 5-3-1

5.3.2 Recommended Wire Diameter, Wiring Equipment, Crimp Terminal ..... 5-3-2

5.3.3 Applicable Breaker ..... 5-3-4

5.3.4 Wiring of DC Link Choke (DCL) ..... 5-3-6

5.3.5 Wiring of Braking Resistor and Regenerative Braking Unit ..... 5-3-7

**5.4 Control Circuit Terminal ..... 5-4-1**

5.4.1 Configuration of Control Circuit Terminal ..... 5-4-1

5.4.2 Recommended Wire Diameter and Wiring Method for Control Circuit Terminals ..... 5-4-7

5.4.3 Switching Sink/Source Logic and Connecting External Power Supply/Programmable Controller ..... 5-4-9

# 5.1 Remove the Terminal Block Cover

Q

- How to remove and attach the terminal block cover?

A

- Control terminal can be checked by removing the terminal block cover. The main circuit terminal block can be checked by removing the backing plate.

## ■ How to remove the terminal block cover

(1) Loosen the terminal block cover fixing screws (one or two locations).

(2) Remove the terminal block cover from the bottom while pressing the lower part of the terminal block cover in the direction of the arrow.

(3) When wiring, slide the backing plate forward and remove it.

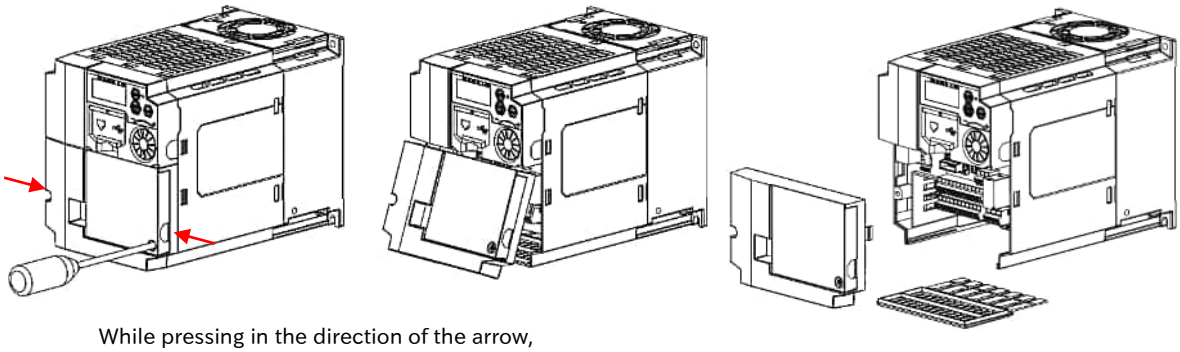

While pressing in the direction of the arrow, remove the terminal block cover from below.

* The terminal block cover fixing screws are provided in one place on the lower right or lower left for models with a capacity of 3.0 kW or less, and in two places on both sides for models with a capacity of 3.7 kW or more. Also, the control terminal cover is fixed to the terminal block cover with a screw, but it is not fixed to the main unit. Therefore, the terminal block cover can be removed without removing the control terminal cover.

## ■ How to attach the terminal block cover

- Contrary to removing, attach the terminal block cover to the main unit from the upper side first and push it in until it clicks. (Tighten the fixing screws of the control terminal cover and the terminal block cover with a tightening torque of 0.2 to 0.3 N·m.)

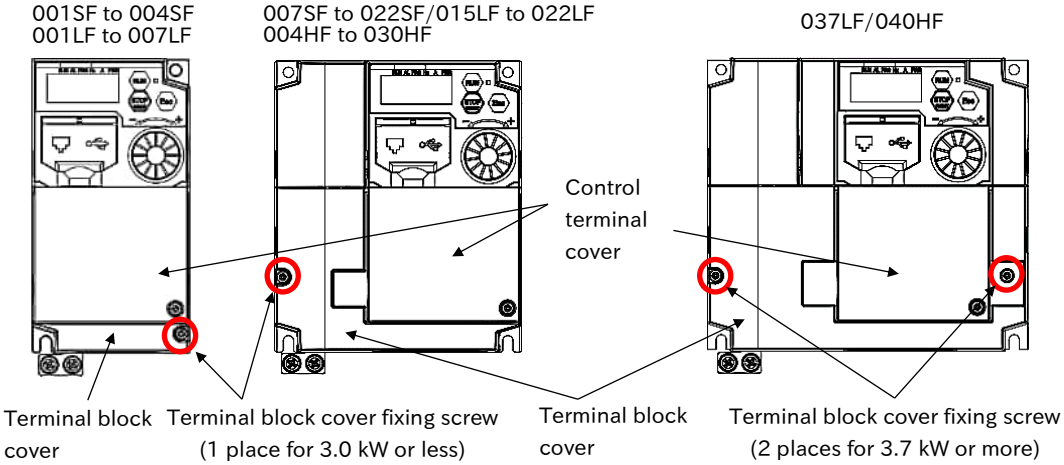

## How to use the backing plate

- C1-001SF to C1-022SF, C1-001LF to C1-075LF, C1-004HF to C1-075HF

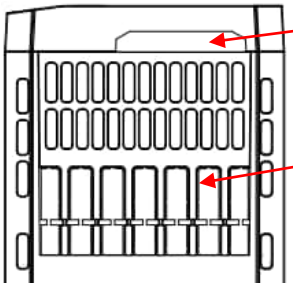

Control circuit wiring
- Pull out from the terminal block cover.

Main circuit wiring
- Cut the connection points between the unnecessary part and the backing plate using a nipper or a cutter, to cut off the unnecessary part for wiring.

- C1-110LF/C1-150LF, C1-0110HF/C1-150HF

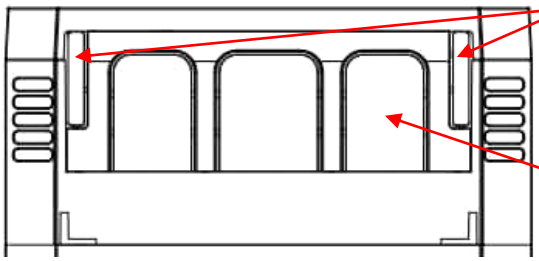

Control circuit wiring
- Cut the left and right unnecessary parts of the backing plate with a nipper or a cutter, to cut off the unnecessary part for wiring.

Main circuit wiring
- Cut the connection points between the unnecessary part and the backing plate using a nipper or a cutter, to cut off the unnecessary part for wiring.

!

- Cut the connection points between the unnecessary part and the backing plate using a nipper or a cutter, to cut off the unnecessary part for wiring. Be careful not to get injured.
- When high voltage is applied to the relay output terminals, etc., pull out the wires separately from the low voltage wires such as the control circuit wires.

# 5.2 Main Circuit Terminal

## 5.2.1 Configuration of Main Circuit Terminal

✓ Short circuit between P and PD (factory default state)
- The [PD/+1] and [P/+] terminals are short-circuited at the factory-set. If P and PD are not connected, power is not supplied to the main circuit, which disables operation.

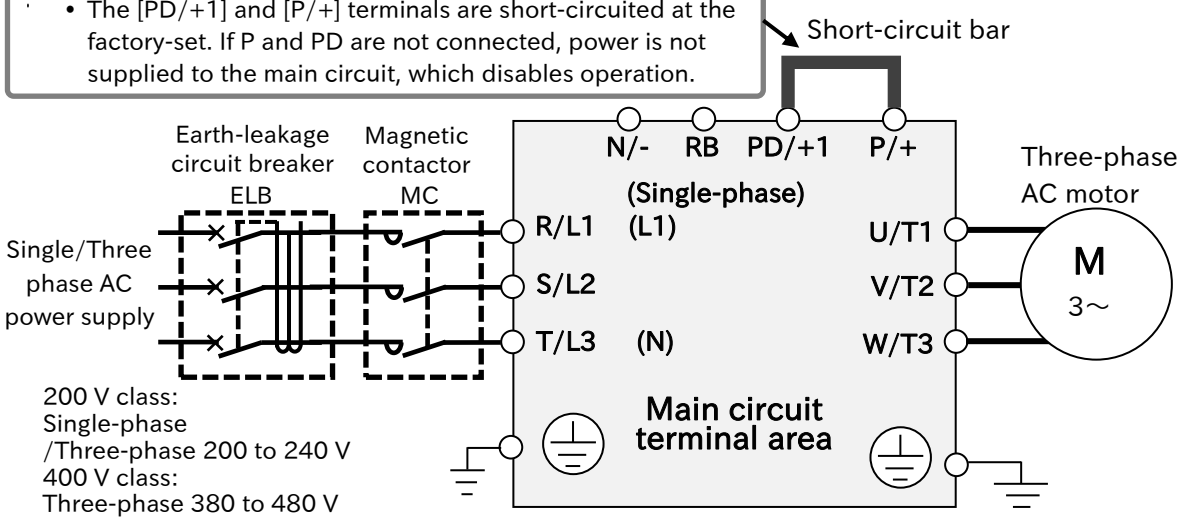


| Terminal symbol | Terminal name | Description |
|---|---|---|
| R/L1 (Single-phase: L1)<br>S/L2<br>T/L3 (Single-phase: N) | Input terminal for main power supply | Connects to the AC power supply.<br>There is no S/L2 terminal in the single-phase 200 V model. Connect to [L1] and [N] terminals. |
| U/T1<br>V/T2<br>W/T3 | Inverter output terminal | Connect a three-phase motor. |
| PD/+1<br>P/+ | DC link choke connection terminal | Remove the short-circuit bar between [PD/+1] terminal and [P/+] terminal and connect the optional DC link choke for power factor improvement. |
| RB | External braking resistor connection terminal | Connect the optional external braking resistor between [P/+] terminal and [RB] terminal. (In case brake torque is required.) |
| P/+<br>N/- | Regenerative braking unit connection terminal | Connect the optional regenerative braking unit between [P/+] terminal and [N/-] terminal. (In case braking torque is required and the braking circuit built in the inverter is insufficient.) |
| G (⏚) | Inverter grounding terminal | Ground terminal. Ground to prevent electric shock and reduce noise. Connect according to the applicable local grounding standards.<br>For models of 200 V class 3.7 kW or less and 400 V class 4.0 kW or less, connect the grounding bar on the bottom left of the inverter. |

### ! Precautions for wiring the main circuit terminals

Electric shock Fire

● **Risk of electric shock and fire!**

Do

- Be sure to check that the charge lamp is off before making any work such as wiring change after the power is shut off. Once the power is turned on, regardless of whether open phase is occurring or the device is running or not, it is very dangerous because the capacitor in the inverter is charged at high voltage for certain period even after the power is shut off. Check that the input power is turned OFF, and wait at least 10 minutes before starting the work. (Check that the main unit charge lamp is off and the DC voltage between terminals [P/+] and [N/-] is 45 V or less.)

## 5.2.2 Wiring the Power Supply and Motor

**Q**

- How to connect the power supply and motor to the inverter?

**A**

- Connect [R/L1] terminal, [S/L2] terminal and [T/L3] terminal to the AC power supply and [U/T1] terminal, [V/T2] terminal and [W/T3] terminal to the motor.
- Pay attention to the following points when wiring.

**!**

### Cautions for wiring the main circuit terminals

#### Cautions for Input Power Supply

| | |
|---|---|
| DANGER<br>Burnout | ●Risk of burnout of the motor!! |
| Prohibited | • Do not drive a 200 V class motor with a 400 V class inverter. |
| Do | • The input power supply should be within the following ranges.<br>• 200 V class 200 to 240 VAC (allowable fluctuation range +10%/-15%)<br>• 400 V class 380 to 480 VAC (allowable fluctuation range +10%/-15%),<br>• Power supply frequency 50 Hz/60 Hz (fluctuation range ±5%) for both 200 V/400 V classes |

#### Cautions for the main power input terminal

| | |
|---|---|
| Fire<br>Damage | ● Risk of fire and damage to machine! |
| Do | • For connection between the power supply and the main power input terminal ([R/L1] terminal, [S/L2] terminal, [T/L3] terminal), use the earth-leakage breaker for protecting the circuit (wiring).<br>• If the protection function of the inverter is activated, there is a possibility that a failure or an accident is occurring on your system. Connect a magnetic contactor that shuts off the power supplied to the inverter.<br>• Since the earth-leakage breaker may malfunction due to effects of high frequency, please use a model with large high-frequency sensitive current value. |

Failure

● **Risk of damage to the inverter!**

Prohibited

- Do not turn on or off the magnetic contactor installed on the input (primary) and output (secondary) sides of the inverter to start or stop operation.

Do

- To start or stop operation using external signals, use the RUN command (FW, RV) of the control circuit terminal block.

Electric shock
Injury
Failure

● **Risk of electric shock, injury and damage to the inverter!**

Prohibited

- Do not operate the inverter when an input phase is lost.
- With the three-phase input model, even if an input phase is missing, the internal capacitor will be charged, which may cause an electric shock or injury. In addition, if an input phase is missing, the inverter may be damaged due to frequent undervoltage and overcurrent errors due to single-phase operation.
- With a single-phase input model, power will not be supplied due to a single-wire disconnection. However, contact with the power line on the unbroken

Failure

● **Risk of damage to the inverter!**

Prohibited

- Do not use the following types of power supplies. Otherwise, the internal converter module may be damaged.
  (a) Unbalance of the power supply voltage is 3% or more.
  (b) The power supply capacity is 10 times or more than the inverter capacity and 500 kVA or more.
  (c) If a sudden power supply change occurs.
  (Example 1) If two or more inverters are installed and connected each other with a short bus.
  (Example 2) If the inverter and the thyristor converter are connected to each other with a short bus.
  (Example 3) If a phase advance capacitor is inserted or shut off.

Failure

● **Risk of damage to the inverter!**

Prohibited

- Do not turn on and off the power frequently, which should not be done more than once every 3 minutes.

## Cautions for inverter output terminals

DANGER
Fire

● **Risk of fire, malfunction and damage to machine!**

Do

- Use wires with a thickness equal to or above the applicable wire.
  Otherwise, the output voltage may drop between the inverter and the motor.
  Especially at low speed output, voltage drop caused by wiring reduces the torque of the motor.

Failure

● **Risk of damage to the inverter!**

Prohibited

- Do not install a phase advance capacitor or surge absorber, as they may cause inverter errors or damage to the capacitor or surge absorber.

Burnout

● **Risk of burnout of the motor!**

Do

- When connecting multiple motors, install thermal relays for each of them.

Burnout

● **Risk of burnout of the motor!**

Do

- If the wire length exceeds 20 m, due to the stray capacitance or the inductance of the wire, surge voltage may be generated on the motor terminals (especially on 400 V class), which may cause the motor to burnout.
- For suppressing surge voltage filter, please contact your supplier or local Hitachi sales office.

Burnout

● **Risk of burnout of the motor!**

Do

- The RC value of the thermal relay should be 1.1 times the rated current of the motor. The thermal relay may trip earlier than intended depending on the wire length. In that case, install an AC reactor on the output side of the inverter.

## Cautions for ground terminal for inverter

Electric shock

**● Risk of electric shock!**

Do

- Be sure to ground the inverter and motor for use in accordance with the applicable local grounding standards.
- Use grounding wires whose thickness is not less then that of the applicable wires and make them short as much as possible.

Malfunction

**● Risk of malfunction of the inverter and peripheral control devices!**

Prohibited

- When more than one inverter are used, connect them that the grounding route (condition) should not be cascaded or loops connection.

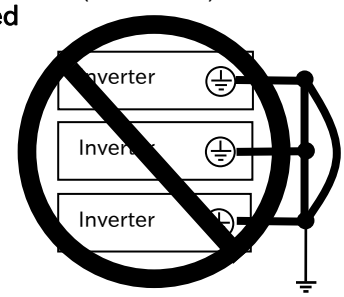


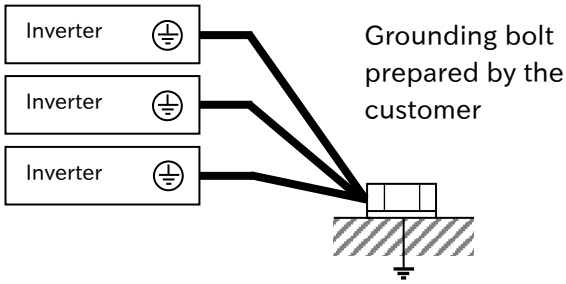


## Other cautions

- For details on compliance with CE and UL standards, refer to "1.3 Compliance to European Directive (CE)" and "1.4 Compliance to UL Standards".
- If exports to the U.S. or Canada, or compliance with UL,cUL standards is required, the wires and circuit breakers specified in the UL,cUL standards must be used. When connecting wires to the main circuit terminal block, use round crimping terminals (UL-certified item) suitable for the wires for use. Use a crimp tool recommended by the manufacturer of the crimping terminal to crimp the terminal.
- Screw size may differ depending on the terminal. For the screw sizes of the main circuit terminal and the ground terminal, refer to "5.2.3 Arrangement of Main Circuit Terminal Block".
- For the wiring to the inverter and the tightening torque of the crimp terminal and terminal screw, refer to the table in "5.3.2 Recommended Wire Diameter, Wiring Equipment, Crimp Terminal".
- In case of replacing from WJ200 series, if the wire diameter, etc., differs, please contact your supplier or local Hitachi sales office.

## 5.2.3 Arrangement of Main Circuit Terminal Block

- The arrangement of the main circuit terminal of the inverter is shown in the figure below.
- The main circuit terminal arrangement is different from that of WJ200 series. When replacing, pay attention to differences in the main circuit terminal arrangement before wiring.

| Models | Terminal arrangement |
|---|---|
| Single-phase 200 V<br>0.1 to 0.4 kW<br>C1-001SF<br>C1-002SF<br>C1-004SF<br><br>Three-phase 200 V<br>0.1 to 0.75 kW<br>C1-001LF<br>C1-002LF<br>C1-004LF<br>C1-007LF | 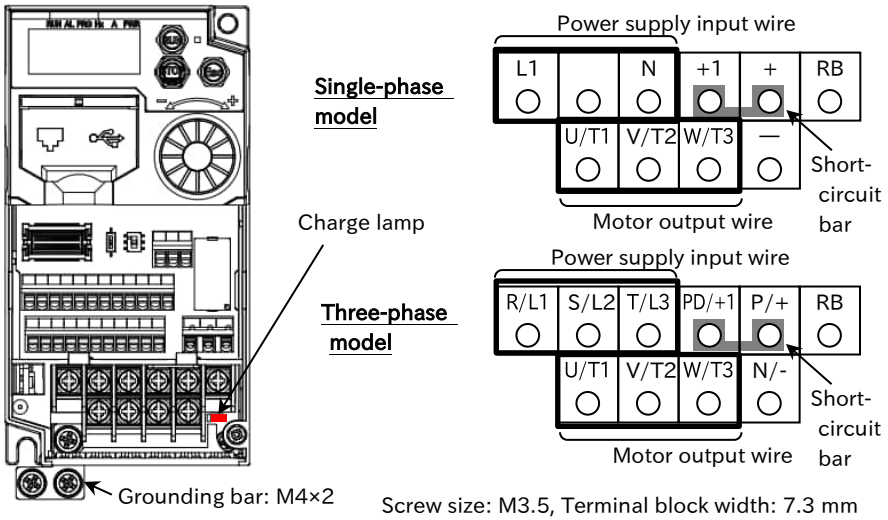 |
| Single-phase 200 V<br>0.75 to 2.2 kW<br>C1-007SF<br>C1-015SF<br>C1-022SF<br><br>Three-phase 200 V<br>1.5 to 2.2 kW<br>C1-015LF<br>C1-022LF<br><br>Three-phase 400 V<br>0.4 to 3.0 kW<br>C1-004HF<br>C1-007HF<br>C1-015HF<br>C1-022HF<br>C1-030HF | 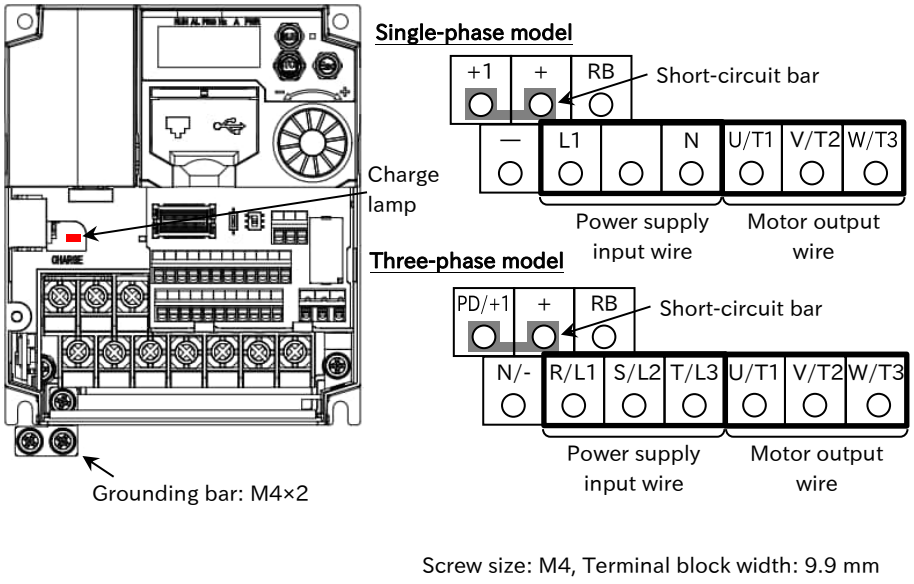 |
| Three-phase 200 V<br>3.7 kW<br>C1-037LF<br><br>Three-phase 400 V<br>4.0 kW<br>C1-040HF | 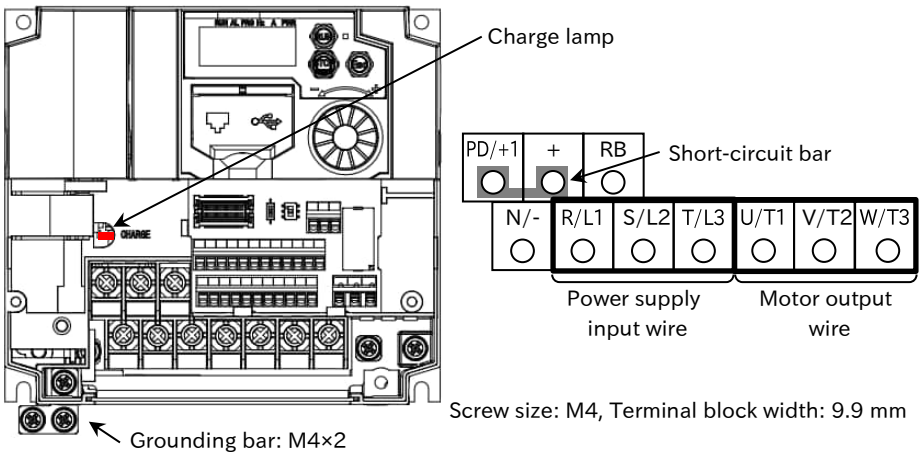 |

| Models | Terminal arrangement |
|---|---|
| Three-phase 200 V<br>5.5/7.5 kW<br>C1-055LF<br>C1-075LF<br><br>Three-phase 400 V<br>5.5/7.5 kW<br>C1-055HF<br>C1-075HF | 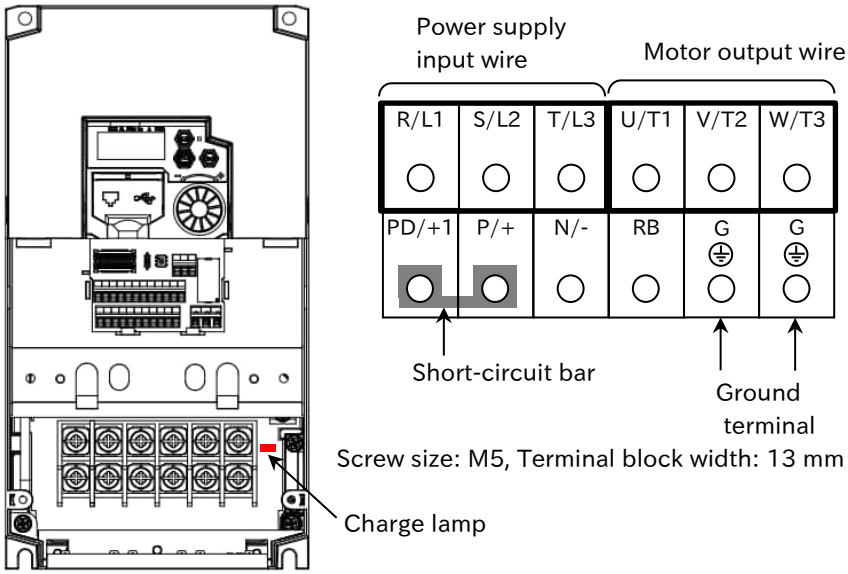 |
| Three-phase 200 V<br>11 kW<br>C1-110LF<br><br>Three-phase 400 V<br>11/15 kW<br>C1-110HF<br>C1-150HF | 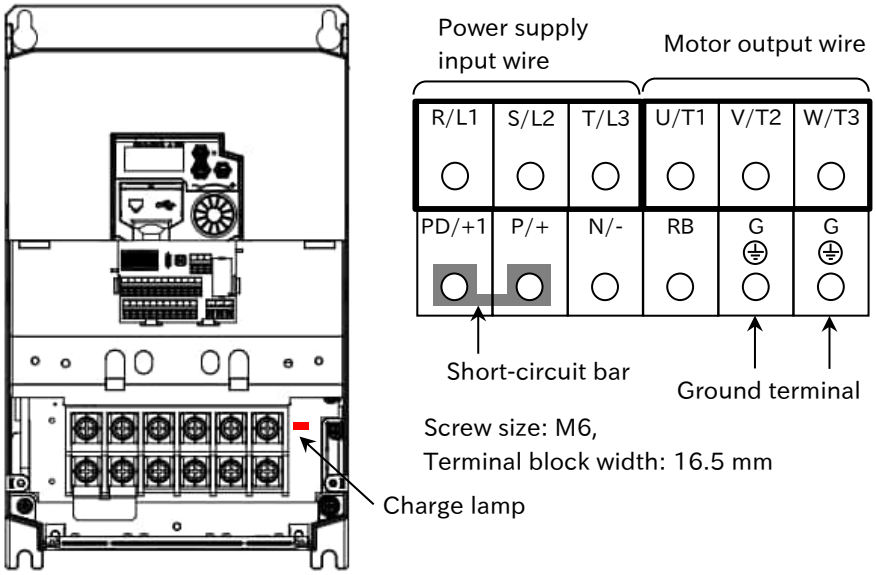 |
| Three-phase 200 V<br>15 kW<br>C1-150LF | 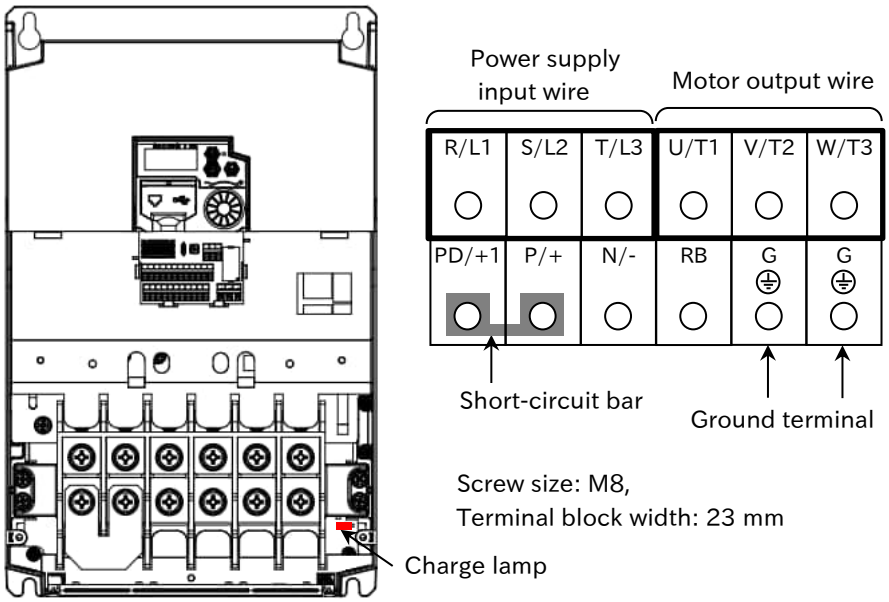 |

# 5.3 Applicable Peripheral Device

## 5.3.1 Overview of Applicable Peripheral Devices

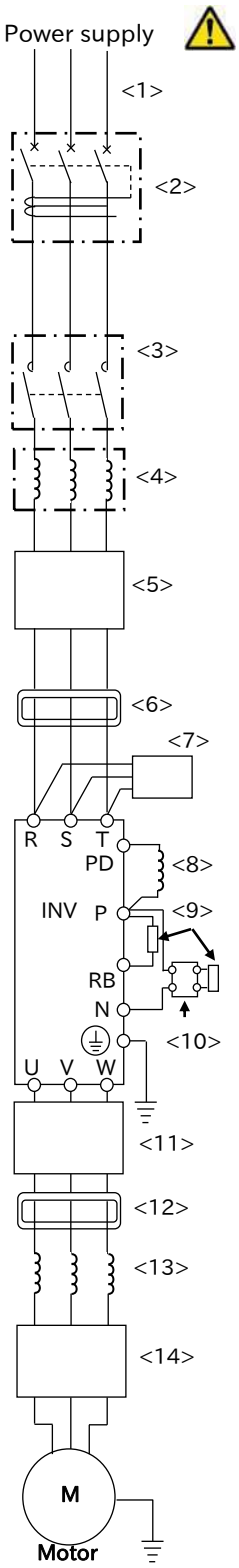


### Cautions

- The applicable devices shown in this chapter are those when Hitachi standard 3-phase 4-pole induction motor is used.
- For the circuit breaker, choose an appropriate device by taking breaking capacity into consideration. (Use an inverter-compatible type.)
- To ensure safety, use an earth-leakage breaker (ELB).
- Use a 60˚C or 75˚C copper wire (HIV wire).
  (Refer to "1.4.1 UL Cautions" for details.)
- If the wiring length exceeds 20 m, a thick power line needs to be used.
- Use 0.75 mm2 wire for relay output terminals.
- Tighten the terminal screws at specified torques. Loose tightening may cause a short circuit or fire. Excessive tightening may damage the terminal block or inverter.
- Employ different sensitive currents for earth-leakage breaker (ELB) depending on the total wiring length between the inverter and the power supply and between the inverter and the motor. Also, use an inverter-compatible type earth-leakage breaker. High-speed type products may malfunction.
- Leakage current is approx. 30 mA/km when CV wire is used and wired with a metal tube.
- As relative permittivity of IV wire is high, the current increases by about 8 times.
  Therefore, use an item with 8 times sensitive current that is shown on the table right.
  If the total wiring length exceeds 100 m, use a CV wire.

| Total wiring length | Sensitivity current (mA) |
|---|---|
| 100 m or shorter | 30 |
| 300 m or shorter | 100 |
| 800 m or shorter | 200 |

| No. | Name | Function |
|---|---|---|
| <1> | Wire | Refer to "5.3.2 Recommended Wire Diameters, Wiring Equipment and Crimp Terminal". |
| <2> | Earth-leakage breaker (ELB) | |
| <3> | Magnetic contactor (MC) | |
| <4> | Input-side AC reactor (for harmonic suppression, power coordination, power factor improvement) (ALI-***) | This is applied as a countermeasure against harmonic suppression, or when imbalance of power supply voltage is 3% or above, or when power supply capacity is 500 kVA or above. It is also used when a rapid change is made to power supply voltage. It is also effective in improving power factor. |
| <5> | Inverter noise filter (NF-***) | This reduces conducted noise generated from the inverter and transmitted through the wires. Connected to the primary side (input side) of the inverter. |
| <6> | Radio noise filter (Zero-phase reactor) (ZCL-*) | When the inverter is used, noise may be generated on an adjacent radio or other devices through wiring on the primary side (input side) of inverter. This is used for reducing the noise (reducing radiation noise). |
| <7> | Input-side radio noise filter (CFI-*) | This reduces the radiation noise that is emitted from the wire on the input side. |
| <8> | DC link choke (DCL-*-**) | This suppresses harmonics generated from the inverter. |
| <9> | Braking resistor | This is used for increasing the braking torque of inverter, repeating power on and off at high interval, or reducing the speed of high load caused by moment of inertia. |
| <10> | Regenerative braking unit (BRD-**) | |
| <11> | Output-side noise filter (ACF-C*) | This is installed between the inverter and motor to reduce the radiation noise that is emitted from the wire. It is used to reduce radio interference on radios or televisions or prevent malfunctioning of measurement instruments and sensors. |
| <12> | Radio noise filter (Zero-phase reactor) (ZCL-***) | This is applied for reducing noise generated on the output side of inverter. (It can be used on both input side and output side.) |
| <13> | Output-side AC reactor (ACL-*-**) for reducing vibration/preventing malfunctioning of thermal relay | When a general-use motor is driven by the inverter, compared with when it is run by commercial power supply, larger vibration may be generated. By connecting this device between the inverter and motor, the vibration of motor can be reduced. Also, if the wiring length between the inverter and motor is long (10 m or longer), by inserting a reactor, malfunctioning of the thermal relay caused by harmonic attributable to switching of inverter can be prevented. It is also possible to use a current sensor instead of a thermal relay. |
| <14> | LCR filter | This is an output-side sinusoidal filter to be installed between the inverter and motor to improve output current and voltage waveform to reduce motor vibration, noise, and radiation noise from wires. It is also effective in suppressing surge voltage. |

## 5.3.2 Recommended Wire Diameter, Wiring Equipment, Crimp Terminal

**Q**

- What is the recommended wire diameter for the main circuit wiring?

**A**

- The following table shows the recommended wiring to the inverter, crimp terminals and tightening torque of the terminal screws.

### Single-phase 200 V model

| Model | Load rating setting | Main circuit terminal block wiring AWG ($mm^2$) | Terminal screw size (Terminal block width) | Crimp terminal Power/Ground | Tightening torque N・m Power/Ground (maximum value) |
|---|---|---|---|---|---|
| C1-001SF | Normal duty (ND) | AWG16 (1.3 $mm^2$) | M3.5 (7.3 mm) | R2-3.5/R2-4 | 0.9 to 1.2/1.3 to 1.5 (1.4/1.8) |
| | Light duty (LD) | | | | |
| C1-002SF | Normal duty (ND) | AWG16 (1.3 $mm^2$) | M3.5 (7.3 mm) | R2-3.5/R2-4 | 0.9 to 1.2/1.3 to 1.5 (1.4/1.8) |
| | Light duty (LD) | | | | |
| C1-004SF | Normal duty (ND) | AWG16 (1.3 $mm^2$) | M3.5 (7.3 mm) | R2-3.5/R2-4 | 0.9 to 1.2/1.3 to 1.5 (1.4/1.8) |
| | Light duty (LD) | | | | |
| C1-007SF | Normal duty (ND) | AWG12 (3.3 $mm^2$) | M4 (9.9 mm) | R5.5-4/R5.5-4 | 1.4/1.3 to 1.5 (1.6/1.8) |
| | Light duty (LD) | | | | |
| C1-015SF | Normal duty (ND) | AWG10 (5.3 $mm^2$) | M4 (9.9 mm) | R5.5-4/R5.5-4 | 1.4/1.3 to 1.5 (1.6/1.8) |
| | Light duty (LD) | | | | |
| C1-022SF | Normal duty (ND) | AWG10 (5.3 $mm^2$) | M4 (9.9 mm) | R5.5-4/R5.5-4 | 1.4/1.3 to 1.5 (1.6/1.8) |
| | Light duty (LD) | | | | |

### Three-phase 200 V model

| Model | Load rating setting | Main circuit terminal block wiring AWG ($mm^2$) | Terminal screw size (Terminal block width) | Crimp terminal Power/Ground | Tightening torque N・m Power/Ground (maximum value) |
|---|---|---|---|---|---|
| C1-001LF | Normal duty (ND) | AWG16 (1.3 $mm^2$) | M3.5 (7.3 mm) | R2-3.5/R2-4 | 0.9 to 1.2/1.3 to 1.5 (1.4/1.8) |
| | Light duty (LD) | | | | |
| C1-002LF | Normal duty (ND) | AWG16 (1.3 $mm^2$) | M3.5 (7.3 mm) | R2-3.5/R2-4 | 0.9 to 1.2/1.3 to 1.5 (1.4/1.8) |
| | Light duty (LD) | | | | |
| C1-004LF | Normal duty (ND) | AWG16 (1.3 $mm^2$) | M3.5 (7.3 mm) | R2-3.5/R2-4 | 0.9 to 1.2/1.3 to 1.5 (1.4/1.8) |
| | Light duty (LD) | | | | |
| C1-007LF | Normal duty (ND) | AWG16 (1.3 $mm^2$) | M3.5 (7.3 mm) | R2-3.5/R2-4 | 0.9 to 1.2/1.3 to 1.5 (1.4/1.8) |
| | Light duty (LD) | | | | |
| C1-015LF | Normal duty (ND) | AWG14 (2.1 $mm^2$) | M4 (9.9 mm) | R2-4/R2-4 | 1.4/1.3 to 1.5 (1.6/1.8) |
| | Light duty (LD) | | | | |
| C1-022LF | Normal duty (ND) | AWG12 (3.3 $mm^2$) | M4 (9.9 mm) | R5.5-4/R5.5-4 | 1.4/1.3 to 1.5 (1.6/1.8) |
| | Light duty (LD) | | | | |
| C1-037LF | Normal duty (ND) | AWG10 (5.3 $mm^2$) | M4 (9.9 mm) | R5.5-4/R5.5-4 | 1.4/1.3 to 1.5 (1.6/1.8) |
| | Light duty (LD) | | | | |
| C1-055LF | Normal duty (ND) | AWG6 (13 $mm^2$) | M5 (13 mm) | R14-5/R14-5 | 3.0/3.0 (3.0/3.0) |
| | Light duty (LD) | | | | |
| C1-075LF | Normal duty (ND) | AWG6 (13 $mm^2$) | M5 (13 mm) | R14-5/R14-5 | 3.0/3.0 (3.0/3.0) |
| | Light duty (LD) | | | | |
| C1-110LF | Normal duty (ND) | AWG4 (21 $mm^2$) | M6 (16.5 mm) | R22-6/R22-6 | 3.9 to 5.0/3.9 to 5.0 (5.2/5.2) |
| | Light duty (LD) | | | | |
| C1-150LF | Normal duty (ND) | AWG2 (34 $mm^2$) | M8 (23 mm) | R38-8/R38-8 | 5.9 to 8.8/5.9 to 8.8 (10.5/10.5) |
| | Light duty (LD) | | | | |

## Three-phase 400 V model

| Model | Load rating setting | Main circuit terminal block wiring AWG ($mm^2$) | Terminal screw size (Terminal block width) | Crimp terminal Power/Ground | Tightening torque N・m Power/Ground (maximum value) |
|---|---|---|---|---|---|
| C1-004HF | Normal duty (ND) | AWG16 (1.3 $mm^2$) | M4 (9.9 mm) | R2-4/R2-4 | 1.4/1.3 to 1.5 (1.6/1.8) |
| | Light duty (LD) | | | | |
| C1-007HF | Normal duty (ND) | AWG16 (1.3 $mm^2$) | M4 (9.9 mm) | R2-4/R2-4 | 1.4/1.3 to 1.5 (1.6/1.8) |
| | Light duty (LD) | | | | |
| C1-015HF | Normal duty (ND) | AWG16 (1.3 $mm^2$) | M4 (9.9 mm) | R2-4/R2-4 | 1.4/1.3 to 1.5 (1.6/1.8) |
| | Light duty (LD) | | | | |
| C1-022HF | Normal duty (ND) | AWG14 (2.1 $mm^2$) | M4 (9.9 mm) | R2-4/R2-4 | 1.4/1.3 to 1.5 (1.6/1.8) |
| | Light duty (LD) | | | | |
| C1-030HF | Normal duty (ND) | AWG14 (2.1 $mm^2$) | M4 (9.9 mm) | R2-4/R2-4 | 1.4/1.3 to 1.5 (1.6/1.8) |
| | Light duty (LD) | | | | |
| C1-040HF | Normal duty (ND) | AWG12 (3.3 $mm^2$) | M4 (9.9 mm) | R5.5-4/R5.5-4 | 1.4/1.3 to 1.5 (1.6/1.8) |
| | Light duty (LD) | | | | |
| C1-055HF | Normal duty (ND) | AWG10 (5.3 $mm^2$) | M5 (13 mm) | R5.5-5/R5.5-5 | 3.0/3.0 (3.0/3.0) |
| | Light duty (LD) | | | | |
| C1-075HF | Normal duty (ND) | AWG10 (5.3 $mm^2$) | M5 (13 mm) | R5.5-5/R5.5-5 | 3.0/3.0 (3.0/3.0) |
| | Light duty (LD) | | | | |
| C1-110HF | Normal duty (ND) | AWG6 (13 $mm^2$) | M6 (16.5 mm) | R14-6/R14-6 | 3.9 to 5.1/3.9 to 5.1 (5.1/5.1) |
| | Light duty (LD) | | | | |
| C1-150HF | Normal duty (ND) | AWG6 (13 $mm^2$) | M6 (16.5 mm) | R14-6/R14-6 | 3.9 to 5.1/3.9 to 5.1 (5.1/5.1) |
| | Light duty (LD) | | | | |

!

- The wire size in the above table shows the designed values based on HIV cables (with thermal resistance of 75˚C).
- If the wiring length exceeds 20 m, a thick power line needs to be used.
- When connecting wires to the main circuit terminal block, use round crimping terminals (UL-certified item) suitable for the wires for use. Use a crimp tool recommended by the manufacturer of the crimping terminal to crimp the terminal.
- Use a ground wire with a diameter equal to or thicker than that indicated on the power line.
- It is recommended to tight screws at the "maximum value" of the tightening torque in the above table.

## 5.3.3 Applicable Breaker

### ■ Single-phase 200 V class

| Model C1-***** | Load rating | Applicable Motor (kW) | Applicable devices (input voltage 200 to 220 V) | | | | | | | |
|---|---|---|---|---|---|---|---|---|---|---|
| | | | Without reactor (DCL or ALI) | | | | With reactor (DCL or ALI) | | | |
| | | | Earth-leakage breaker (ELB) | | Magnetic contactor (MC) | | Earth-leakage breaker (ELB) | | Magnetic contactor (MC) | |
| | | | Example Model | Rated current (A) | AC-1 | AC-3 | Example Model | Rated current (A) | AC-1 | AC-3 |
| 001S | Normal duty (ND) | 0.1 | EB-30E | 5 | HC8 | HC8 | EB-30E | 5 | HC8 | HC8 |
| 002S | | 0.2 | EB-30E | 5 | HC8 | HC8 | EB-30E | 5 | HC8 | HC8 |
| 004S | | 0.4 | EB-30E | 10 | HC8 | HC8 | EB-30E | 5 | HC8 | HC8 |
| 007S | | 0.75 | EB-30E | 15 | HC8 | HC10 | EB-30E | 10 | HC8 | HC8 |
| 015S | | 1.5 | EB-30E | 20 | HC8 | HC20 | EB-30E | 10 | HC8 | HC8 |
| 022S | | 2.2 | EB-30E | 30 | HC8 | HC35 | EB-30E | 15 | HC8 | HC10 |
| 001S | Light duty (LD) | 0.2 | EB-30E | 5 | HC8 | HC8 | EB-30E | 5 | HC8 | HC8 |
| 002S | | 0.4 | EB-30E | 5 | HC8 | HC8 | EB-30E | 5 | HC8 | HC8 |
| 004S | | 0.55 | EB-30E | 10 | HC8 | HC8 | EB-30E | 5 | HC8 | HC8 |
| 007S | | 1.1 | EB-30E | 15 | HC8 | HC20 | EB-30E | 10 | HC8 | HC8 |
| 015S | | 2.2 | EB-30E | 30 | HC8 | HC20 | EB-30E | 15 | HC8 | HC8 |
| 022S | | 3.0 | EB-30E | 30 | HC8 | HC35 | EB-30E | 15 | HC8 | HC10 |

### ■ Three-phase 200 V class

| Model C1-***** | Load rating | Applicable Motor (kW) | Applicable devices (input voltage 200 to 220 V) | | | | | | | |
|---|---|---|---|---|---|---|---|---|---|---|
| | | | Without reactor (DCL or ALI) | | | | With reactor (DCL or ALI) | | | |
| | | | Earth-leakage breaker (ELB) | | Magnetic contactor (MC) | | Earth-leakage breaker (ELB) | | Magnetic contactor (MC) | |
| | | | Example Model | Rated current (A) | AC-1 | AC-3 | Example Model | Rated current (A) | AC-1 | AC-3 |
| 001L | Normal duty (ND) | 0.1 | EB-30E | 5 | HC8 | HC8 | EB-30E | 5 | HC8 | HC8 |
| 002L | | 0.2 | EB-30E | 5 | HC8 | HC8 | EB-30E | 5 | HC8 | HC8 |
| 004L | | 0.4 | EB-30E | 5 | HC8 | HC8 | EB-30E | 5 | HC8 | HC8 |
| 007L | | 0.75 | EB-30E | 10 | HC8 | HC8 | EB-30E | 10 | HC8 | HC8 |
| 015L | | 1.5 | EB-30E | 10 | HC8 | HC10 | EB-30E | 10 | HC8 | HC8 |
| 022L | | 2.2 | EB-30E | 15 | HC8 | HC20 | EB-30E | 15 | HC8 | HC10 |
| 037L | | 3.7 | EB-30E | 30 | HC8 | HC35 | EB-30E | 20 | HC8 | HC20 |
| 055L | | 5.5 | EB-50E | 40 | HC20 | HC55 | EB-30E | 30 | HC20 | HC35 |
| 075L | | 7.5 | EB-50E | 50 | HC20 | HC55 | EB-50E | 40 | HC20 | HC55 |
| 110L | | 11 | EB-100E | 60 | HC55 | H65C | EB-50E | 50 | HC35 | HC55 |
| 150L | | 15 | EB-100E | 75 | HC55 | H80C | EB-100E | 75 | HC55 | H65C |
| 001L | Light duty (LD) | 0.2 | EB-30E | 5 | HC8 | HC8 | EB-30E | 5 | HC8 | HC8 |
| 002L | | 0.4 | EB-30E | 5 | HC8 | HC8 | EB-30E | 5 | HC8 | HC8 |
| 004L | | 0.75 | EB-30E | 5 | HC8 | HC8 | EB-30E | 5 | HC8 | HC8 |
| 007L | | 1.5 | EB-30E | 10 | HC8 | HC8 | EB-30E | 10 | HC8 | HC8 |
| 015L | | 2.2 | EB-30E | 15 | HC8 | HC10 | EB-30E | 15 | HC8 | HC8 |
| 022L | | 3.7 | EB-30E | 15 | HC8 | HC20 | EB-30E | 15 | HC8 | HC10 |
| 037L | | 5.5 | EB-30E | 30 | HC8 | HC35 | EB-30E | 20 | HC8 | HC20 |
| 055L | | 7.5 | EB-50E | 40 | HC20 | HC55 | EB-50E | 40 | HC20 | HC35 |
| 075L | | 11 | EB-50E | 50 | HC35 | HC55 | EB-50E | 50 | HC35 | HC55 |
| 110L | | 15 | EB-100E | 75 | HC55 | H80C | EB-100E | 75 | HC55 | H65C |
| 150L | | 18.5 | EB-100E | 100 | HC55 | H80C | EB-100E | 75 | HC55 | H80C |

## Three-phase 400 V class

| Model C1-***** | Load rating | Applicable Motor (kW) | Applicable devices (input voltage 400 to 440 V) | | | | | | | |
|---|---|---|---|---|---|---|---|---|---|---|
| | | | Without reactor (DCL or ALI) | | | | With reactor (DCL or ALI) | | | |
| | | | Earth-leakage breaker (ELB) | | Magnetic contactor (MC) | | Earth-leakage breaker (ELB) | | Magnetic contactor (MC) | |
| | | | Example Model | Rated current (A) | AC-1 | AC-3 | Example Model | Rated current (A) | AC-1 | AC-3 |
| 004H | Normal duty (ND) | 0.4 | EXK60-C | 15 | HC8 | HC8 | EXK60-C | 15 | HC8 | HC8 |
| 007H | | 0.75 | EXK60-C | 15 | HC8 | HC8 | EXK60-C | 15 | HC8 | HC8 |
| 015H | | 1.5 | EXK60-C | 15 | HC8 | HC8 | EXK60-C | 15 | HC8 | HC8 |
| 022H | | 2.2 | EXK60-C | 15 | HC8 | HC8 | EXK60-C | 15 | HC8 | HC8 |
| 030H | | 3.0 | EXK60-C | 15 | HC8 | HC8 | EXK60-C | 15 | HC8 | HC8 |
| 040H | | 4.0 | EXK60-C | 15 | HC8 | HC10 | EXK60-C | 15 | HC8 | HC8 |
| 055H | | 5.5 | EXK60-C | 20 | HC8 | HC20 | EXK60-C | 15 | HC8 | HC20 |
| 075H | | 7.5 | EXK60-C | 20 | HC8 | HC20 | EXK60-C | 20 | HC8 | HC20 |
| 110H | | 11 | EXK60-C | 40 | HC20 | HC35 | EXK60-C | 30 | HC20 | HC35 |
| 150H | | 15 | EXK60-C | 40 | HC20 | HC55 | EXK60-C | 40 | HC20 | HC50 |
| 004H | Light duty (LD) | 0.75 | EXK60-C | 15 | HC8 | HC8 | EXK60-C | 15 | HC8 | HC8 |
| 007H | | 1.5 | EXK60-C | 15 | HC8 | HC8 | EXK60-C | 15 | HC8 | HC8 |
| 015H | | 2.2 | EXK60-C | 15 | HC8 | HC8 | EXK60-C | 15 | HC8 | HC8 |
| 022H | | 3.0 | EXK60-C | 15 | HC8 | HC8 | EXK60-C | 15 | HC8 | HC8 |
| 030H | | 4.0 | EXK60-C | 15 | HC8 | HC8 | EXK60-C | 15 | HC8 | HC8 |
| 040H | | 5.5 | EXK60-C | 15 | HC8 | HC20 | EXK60-C | 15 | HC8 | HC10 |
| 055H | | 7.5 | EXK60-C | 30 | HC8 | HC20 | EXK60-C | 20 | HC8 | HC20 |
| 075H | | 11 | EXK60-C | 30 | HC8 | HC35 | EXK60-C | 30 | HC8 | HC35 |
| 110H | | 15 | EXK60-C | 40 | HC20 | HC55 | EXK60-C | 40 | HC20 | HC35 |
| 150H | | 18.5 | EXK60-C | 50 | HC20 | HC55 | EXK60-C | 40 | HC20 | HC50 |

- Applicable motor capacity is based on Hitachi 200 VAC (for 200 V class)/400 VAC (for 400 V class), 60 Hz, 4 pole IE3 motor.
- If exports to the U.S. or Canada, or compliance with UL,cUL standards is required, the wires and circuit breakers specified in the UL,cUL standards must be used. For details, refer to "1.4 Compliance to UL Standards".
- Device model name on above table shows example selection. The device selection should be based on rated current, short circuit current capability and accordance to the local electrical legislation.
- For the wire diameter, refer to the "Main circuit terminal block wiring AWG ($mm^2$)" column in "5.3.2 Recommended Wire Diameters, Wiring Instruments, Crimp Terminal".
- The electrical endurance of the class AC-1 magnetic contactor is 500,000 times, but when using for emergency stops during motor drive, the electrical endurance is 25 times.
- If using a MC for emergency stop during motor drive, select a MC of the class AC-3 rated current depending on the inverter input current.
- When selecting oversize inverter capacity compared to motor rating, select magnetic contactor according to the inverter capacity.

## 5.3.4 Wiring of DC Link Choke (DCL)

**Q**

- How can noise be reduced?
- What is the measures against harmonic noise?
- How can power factor be improved?

**A**

- When using a DC link choke (DCL), connect it after removing the short-circuit bar between [PD/+1] and [P/+] terminals.
- The power factor can be improved, and harmonic noises can be reduced by using DC link choke (DCL).

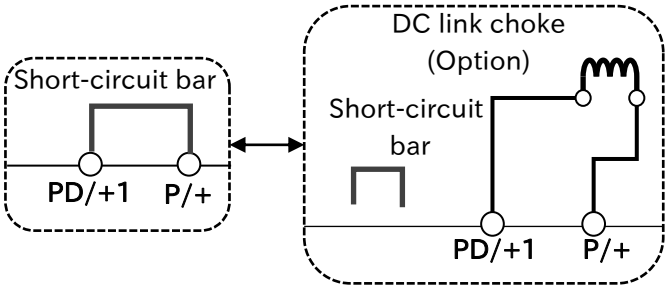


**!** **Cautions for DC link choke connection terminals (PD/+1, P/+)**

| | |
|---|---|
| Caution | • If the short-circuit bar between [PD/+1] and [P/+] terminals is removed and the DC link choke (DCL) is not connected, power is not supplied to the main circuit part of the inverter and the inverter cannot be operated. |
| Prohibited | • When the DC link choke (DCL) is not used, do not remove the short-circuit bar between [PD/+1] and [P/+] terminals. |
| Do | • The wiring length to DC link choke (DCL) should be within 5 m. Otherwise, it may not perform efficiently.<br>• When installing the DC link choke (DCL), please make sure that its heat does not affect the inverter. |

## 5.3.5 Wiring of Braking Resistor and Regenerative Braking Unit

**Q**

- How can an overvoltage error be avoided when short deceleration time is set?
- How can an overvoltage error be avoided at lowering or hanging for crane or elevator?

**A**

- In WJ-C1, a braking resistor circuit is built-in as standard.
- By installing optional braking resistor or regenerative braking unit, the braking force can be improved and the overvoltage can be suppressed, and it can be used even with large regenerative loads (lowering load or load applied at high-speed rotation).
- Refer to "9.9.5 Suppressing Overvoltage with Braking Resistor" for details on the setting when connecting a braking resistor. When connecting the regenerative braking unit, set "Dynamic brake activation selection [b095]" to "Disable (00)".

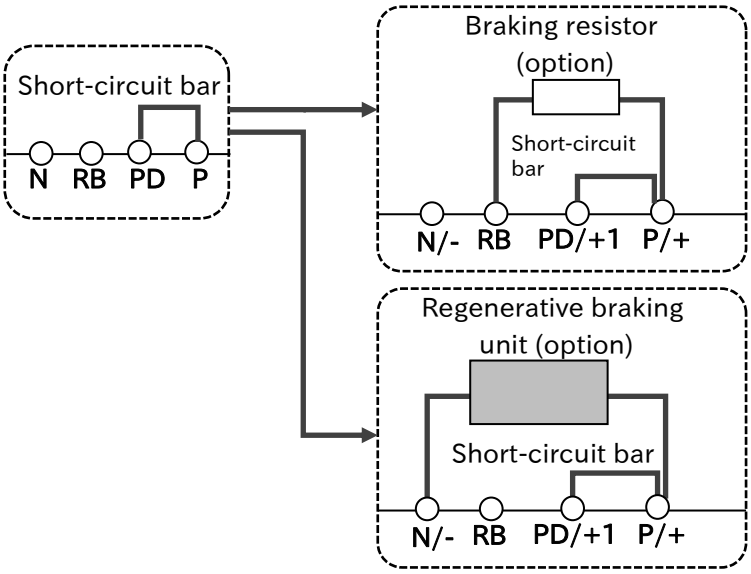


**!**

### Cautions for the brake resistor connection terminals ([P/+], [RB]) and regenerative brake unit connection terminals ([P/+], [N/-])

| | |
|---|---|
| Failure<br>Burnout | ● **Risk of damage to the inverter and burnout of the braking resistor!** |
| Prohibited | • Do not connect items other than the braking resistor between [P/+] and [RB] terminals.<br>• Do not short-circuit [P/+] and [RB] terminals.<br>• Arrange devices so that the heat generated by the braking resistor and regenerative braking unit does not affect the inverter.<br>• Do not attach a resistor whose resistance is lower than the predefined value. Otherwise, the braking resistor (BRD) circuit or the regenerative braking unit may be damaged. |

## Selection and wiring of regenerative braking resistor

| Model | Applicable motor capacity (kW) | Regenerative braking torque (%) without resistor | Connectable minimum resistance | |
|---|---|---|---|---|
| | | | Resistance value (Ω) | BRD use ratio (%) |
| C1-001SF | 0.1 | 50 | 100 | 10 |
| C1-002SF | 0.2 | 50 | 100 | 10 |
| C1-004SF | 0.4 | 50 | 100 | 10 |
| C1-007SF | 0.75 | 50 | 50 | 10 |
| C1-015SF | 1.5 | 50 | 50 | 10 |
| C1-022SF | 2.2 | 20 | 35 | 10 |
| C1-001LF | 0.1 | 50 | 100 | 10 |
| C1-002LF | 0.2 | 50 | 100 | 10 |
| C1-004LF | 0.4 | 50 | 100 | 10 |
| C1-007LF | 0.75 | 50 | 50 | 10 |
| C1-015LF | 1.5 | 50 | 50 | 10 |
| C1-022LF | 2.2 | 20 | 35 | 10 |
| C1-037LF | 3.7 | 20 | 35 | 10 |
| C1-055LF | 5.5 | 20 | 20 | 10 |
| C1-075LF | 7.5 | 20 | 17 | 10 |
| C1-110LF | 11.0 | 10 | 17 | 10 |
| C1-150LF | 15.0 | 10 | 10 | 10 |
| C1-004HF | 0.4 | 50 | 180 | 10 |
| C1-007HF | 0.75 | 50 | 180 | 10 |
| C1-015HF | 1.5 | 50 | 180 | 10 |
| C1-022HF | 2.2 | 20 | 100 | 10 |
| C1-030HF | 3.0 | 20 | 100 | 10 |
| C1-040HF | 4.0 | 20 | 100 | 10 |
| C1-055HF | 5.5 | 20 | 70 | 10 |
| C1-075HF | 7.5 | 20 | 70 | 10 |
| C1-110HF | 11.0 | 10 | 70 | 10 |
| C1-150HF | 15.0 | 10 | 35 | 10 |

# 5.4 Control Circuit Terminal

## 5.4.1 Configuration of Control Circuit Terminal

A

- Control circuit terminal wires are shown in the figure below. Check the cautions, functions, and electrical specifications of the control circuit terminal wiring in this section, and pay sufficient attention to wiring so that there is no incorrect wiring.

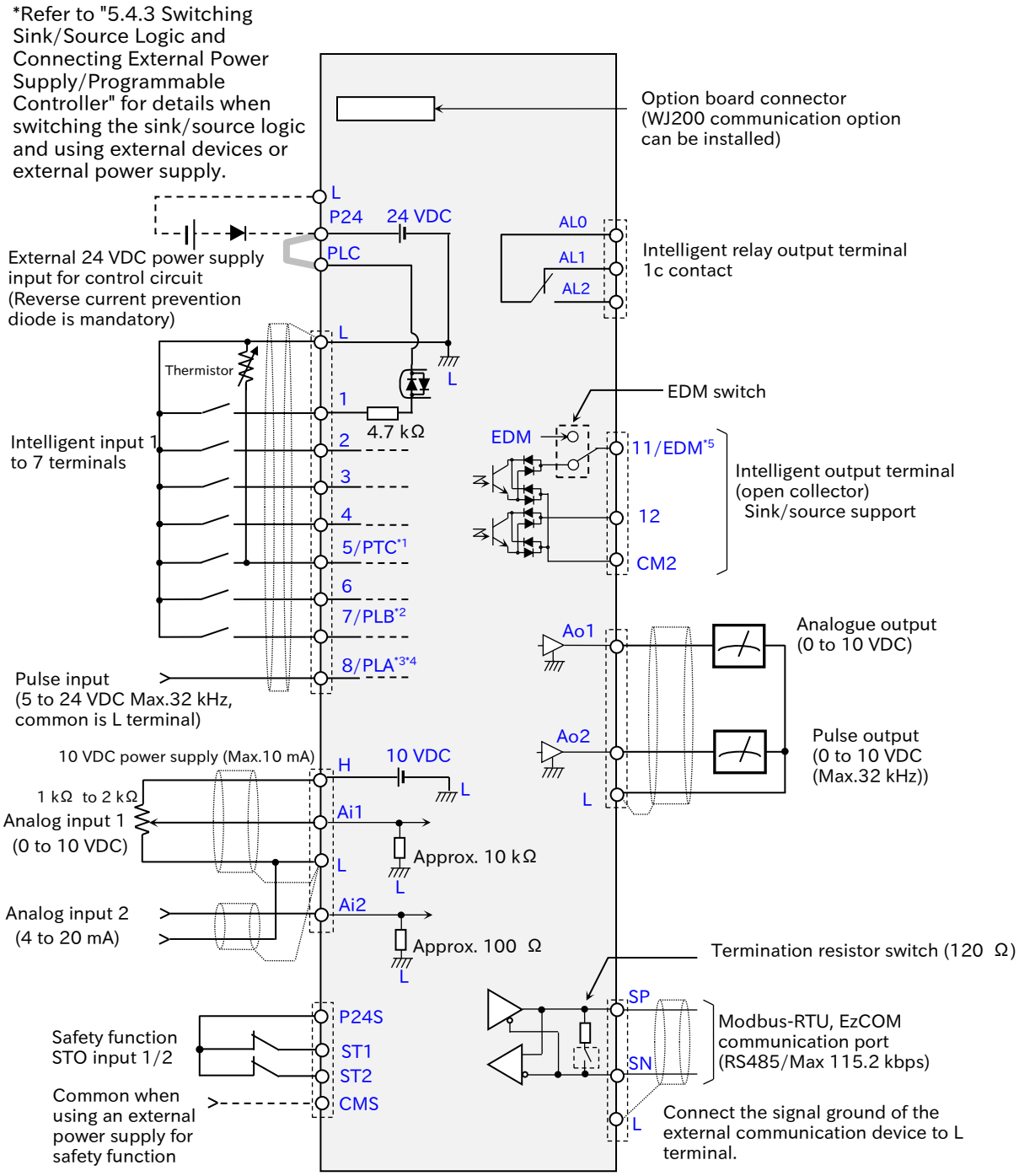


*1. "Thermistor input [PTC]" can only be assigned to input terminal [5].
*2. "Pulse input B [PLB]" can only be assigned to input terminal [7].
*3. Input terminal [8] has a fixed function as the "Pulse input A [PLA]" input terminal.
*4. The electrical specifications of the A-phase and B-phase of the pulse input terminals are different. Take care when inputting 2-phase pulse.
*5. Output terminal [11] switches to the "STO state monitor output [EDM]" by turning on the switch on the board.

## Cautions for wiring control circuit terminals

Electric shock
Failure

● **Risk of electric shock and damage to the inverter!**

Prohibited

- [L] terminal and [CM2] terminal are common terminals for input and output signals. They are isolated from each other.
  Do not short-circuit or ground these common terminals.
- Also, do not ground them through external devices. (Check the grounding condition of the external devices.)
- Do not short-circuit between [H] terminal (10 VDC power supply) and [L] terminal, [P24] terminal (24 VDC power supply) and [L] terminal.

Failure

● **Risk of damage to the inverter!**

Do

- Switching the DIP switch on the PCB while the power is on may cause a failure. Turn off the power, check that Power LED [PWR] on the keypad is off, and then switch.
- Difference of the switch status and the actual input/output specifications may cause a failure. Be sure to check that the characteristics of the input/output and the switch are correct.
- When connecting a relay to the intelligent output terminal, connect a diode for surge absorption in parallel with the coil. Surge-voltage at switching the relay may cause a failure of the internal circuit.
- By supplying external 24 VDC to [P24] terminal, it is possible to operate only the control board and parameters can be read/written. When an external power supply is connected, be sure to connect a reverse current prevention diode. Also, be careful not to shut off the external power supply when writing parameters in this state.

Malfunction

● **Risk of malfunction of the inverter!**

Do

- Separate the wiring to the control circuit terminal block from the wiring of the main circuit line (power line) or relay control circuit. If it is unavoidable to do so, make them positioned at right angles to each other.
- For wiring to the control circuit terminal block, use twisted shield wires, and connect the shield films to each common terminal.
- The wiring length to the control circuit terminal block shall be within 20 m. If the connecting wire exceeds 20 m, sufficient characteristics may not be obtained due to the effects of voltage drop. If it is unavoidable to set the length to more than 20 m, use an analog insulation signal converter, and check that there is no problem with operation.
- For wiring to "External thermistor [PTC]", twist it together with [L] common wires individually, and separate it from the other [L] common wires. Since the power supply flowing through the thermistor is a weak current, separate it from the power line. The wiring length to the thermistor should be within 20 m.
- When connecting contacts to the control circuit terminals, use crossbar twin contacts, etc. that do not easily cause contact failure even with a weak current/voltage.
- After wiring, pull the wire lightly to check that it is securely connected.

## A Arrangement of control circuit terminal block

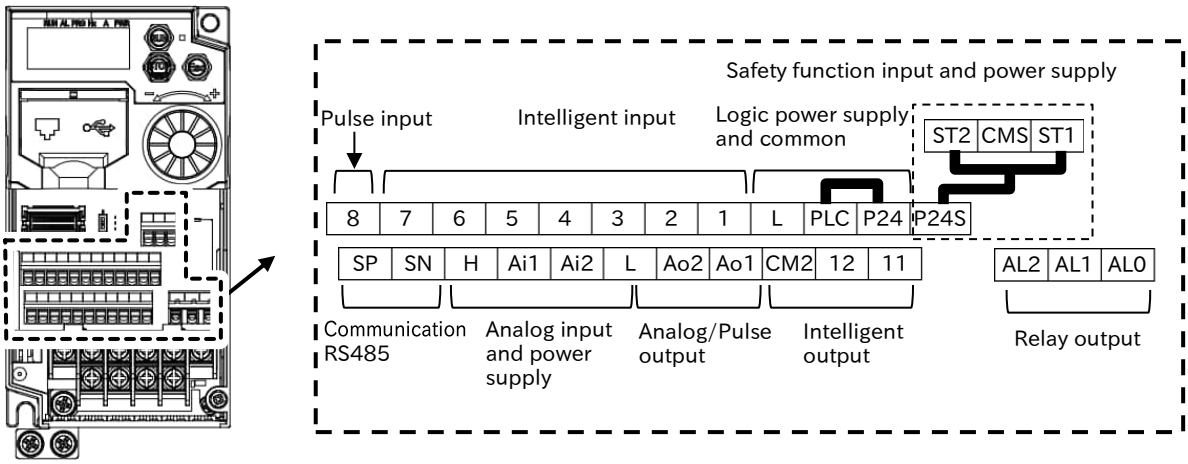


### Wiring example of control circuit terminal

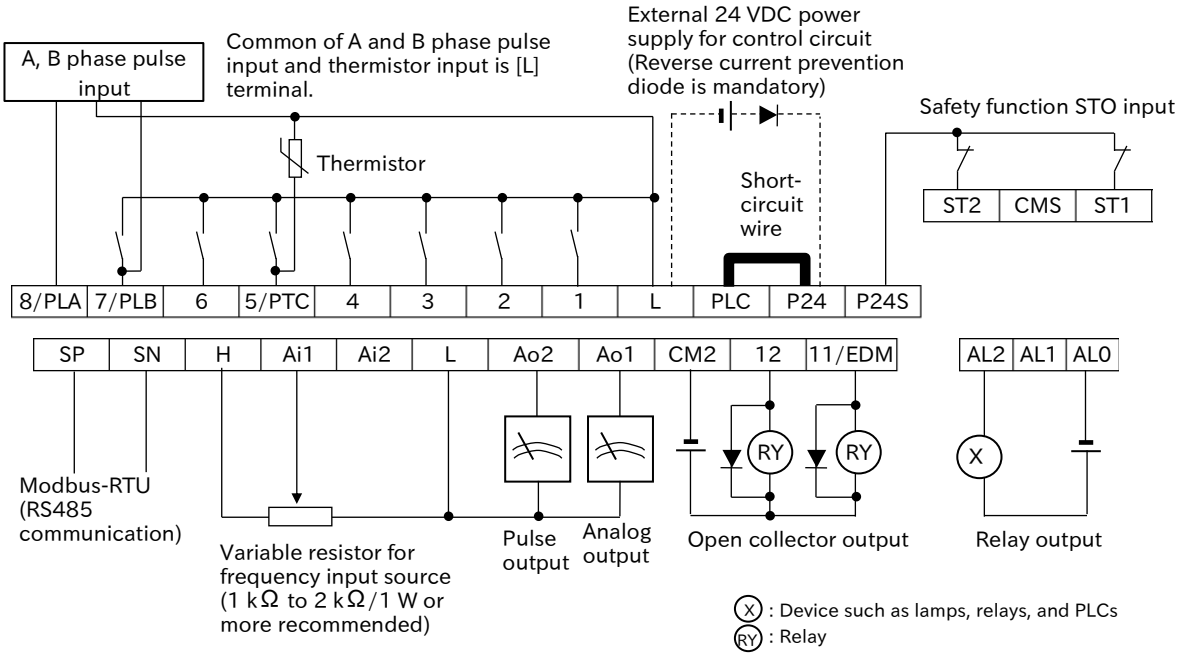


- "Thermistor input [PTC]" can only be assigned to input terminal [5]. Select on "Input terminal 5 function selection [C005]". For thermistor input, the common is [L] terminal regardless of the sink/source logic.
- "Pulse input B [PLB]" can only be assigned to input terminal [7]. Select on "Input terminal 7 function selection [C007]".
- Input terminal [8] has a fixed function as the "Pulse input A [PLA]" input terminal. Function cannot be changed.
- Output terminal [11] switches to the "STO state monitor output [EDM]" by turning on the switch on the board.

## Function and electrical specifications of control circuit terminals

| Item | | Terminal symbol | Terminal name | Description | Electrical characteristics |
|---|---|---|---|---|---|
| Analog input/output | | | | | |
| | Power supply | L | Common for input signal | Common terminal for internal power supply, analog input/output and pulse output terminals. | — |
| | | H | Power supply for frequency setting | 10 VDC power supply. Used when inputting a frequency command from the [Ai1] terminal with a variable resistor. | Maximum allowable input current: 10 mA |
| | Analog input | Ai1 | Analog input 1 (Voltage input) | 0 to 10 VDC voltage input. It is adjusted at the factory to reach the maximum frequency at 9.8 V input. (Adjustable with [A011] to [A015].) | Input impedance: Approx. 10kΩ Allowable input voltage range: -0.3 to +12 VDC |
| | | Ai2 | Analog input 2 (Current input) | 4 to 20 mA current inputs. It is adjusted at the factory to reach the maximum frequency at 19.8 mA input. (Adjustable with [A101] to [A105].) | Input impedance: Approx. 100 Ω Allowable input current range: 0 to 24 mA |
| | Thermistor input | 5 [PTC] | External thermistor input | Set "External thermistor [PTC]" in "Input terminal 5 function selection [C005]" to be enabled. An external thermistor is connected between this terminal and the [L] terminal to trip the inverter due to a temperature error. (Trip at approx. 3 kΩ or more.) Regardless of the sink or source logic, the common is the [L] terminal. | PTC type |
| | Monitor output | Ao1 | Analog output | The monitor value selected by the parameter is output as a 0 to 10 VDC voltage signal. (Adjustable with [C106] and [C109].) | Maximum allowable current: 2 mA Output voltage accuracy ± 10% (Ambient temperature: 25˚C ± 10˚C) |

| Item | | Terminal symbol | Terminal name | Description | Electrical characteristics |
|---|---|---|---|---|---|
| Digital input | | | | | |
| | Power supply | L | Common for input signal | Common terminal for internal power supply, input terminal 8, analog input/output and pulse output terminals. | — |
| | | P24 | Power supply terminal for input signal | 24 VDC internal power supply terminal for digital input. Common for source logic input.<br>By supplying external 24 VDC to this terminal, it is possible to operate only the control board and parameters can be read/written. When an external power supply is connected, be sure to connect a reverse current prevention diode. | Maximum allowable current: 100 mA |
| | | PLC | Sink/Source logic switching terminal for input signal | Sink logic: short-circuit to [P24] terminal<br>Source logic: short-circuit to [L] terminal<br>When driving the digital input with an external power supply, remove the short-circuit wire. See "5.4.3 Switching Sink/Source Logic and Connecting External Power Supply/ Programmable Controller" for more information.<br>Common for input terminals 1 to 7 is [PLC]. | — |
| | Digital input | 7<br>6 | Intelligent input | Each terminal function can be selected by parameter setting for each terminal. Both sink and source logic are supported. See "5.4.3 Switching Sink/Source Logic and Connecting External Power Supply/ Programmable Controller" for more information. | [6]/[7] - [PLC]<br>ON voltage: Min. 18 VDC<br>OFF voltage: Max. 3 VDC<br>Maximum allowable voltage: 27 VDC<br>Load current: 8 mA (at 24 VDC)<br>Internal resistance: 3.0 kΩ |
| | | 5<br>4<br>3<br>2<br>1 | | | Voltage between each input and [PLC] terminal<br>ON voltage: Min. 18 VDC<br>OFF voltage: Max. 3 VDC<br>Maximum allowable voltage: 27 VDC<br>Load current: 5 mA (at 24 VDC)<br>Internal resistance: 4.7 kΩ |
| | Pulse input | 8<br>[PLA] | Pulse input A | Pulse input terminal.<br>5 to 24 VDC can be input.<br>(Note that the internal circuit is different from [PLB] of input terminal 7.) | Input pulse:<br>min. 0.3 Hz to max. 32 kHz<br>[PLA] - [L] voltage:<br>ON voltage: Min. 4 VDC<br>OFF voltage: Max. 1 VDC<br>Maximum allowable voltage: 27 VDC<br>Internal resistance: 11 kΩ |
| | | 7<br>[PLB] | Pulse input B | B-phase pulse input or direction command for single-phase pulse input.<br>Set "Pulse input B [PLB]" to "Input terminal 7 function selection [C007]" to be enabled. (Internal circuit is different from the [PLA] input terminal. Be careful when wiring.) | Input pulse:<br>min. 0.3 Hz to max. 32 kHz<br>[PLB] - [PLC] voltage:<br>ON voltage : Min. 18 VDC<br>OFF voltage: Max. 3 VDC<br>Maximum allowable voltage: 27 VDC<br>Load current: 8 mA (at 24 VDC)<br>Internal resistance: 3.0 kΩ |

| Item | | Terminal symbol | Terminal name | Description | Electrical characteristics |
|---|---|---|---|---|---|
| Digital output | | | | | |
| | Open collector output | 11<br>12 | Intelligent output | Each terminal function can be selected by parameter setting for each terminal. Both sink logic and source logic are supported. See "5.4.3 Switching Sink/Source Logic and Connecting External Power Supply/ Programmable Controller" for more information. | Open collector output<br>Between each terminal and [CM2]<br>Maximum allowable voltage: 27 VDC<br>Maximum allowable input current: 50 mA<br>Voltage drop when turn ON: 4 VDC or less |
| | | CM2 | Common for intelligent output | Common terminal for output terminal [11] and [12]. | Maximum allowable input current: 100 mA |
| | Relay output | AL0<br>AL1<br>AL2 | Intelligent relay output | 1c contact output.<br>Terminal function can be selected by parameter setting.<br>(The default setting is alarm output.) | Maximum contact capacity<br>[AL1] – [AL0]:<br>250 VAC 2 A (Resistance),<br>0.2 A (Inductive load)<br>30 VDC 3 A (Resistance),<br>0.6 A (Inductive load)<br>[AL2] – [AL0]:<br>250 VAC 1 A (Resistance),<br>0.2 A (Inductive load)<br>30 VDC 1 A (Resistance),<br>0.2 A (Inductive load)<br>Minimum contact capacity<br>100 VAC, 10 mA<br>5 VDC, 100 mA |
| | Pulse output | Ao2 | Digital pulse output | The monitor value selected by the parameter is output as a pulse signal or PWM signal. Adjustable with [C030], [C047] and [C105]. | Output pulse: Up to 32 kHz<br>10 VDC output<br>Maximum allowable current: 2 mA |
| Serial communication | | SP<br>SN | Modbus communication terminal | RS485 ports for Modbus-RTU/EzCOM.<br>Maximum baud rate :115.2 kbps<br>To connect the signal ground of the external control device, use [L] terminal. | Built-in terminal resistance :120 Ω<br>Switched by dip switch<br>SP: RS485 differential (+) signal<br>SN: RS485 differential (-) signal |
| Safety Function | | P24S | 24 VDC output | 24 VDC power supply terminal dedicated to [ST1]/[ST2] terminals. | Maximum output current: 100 mA |
| | | CMS | Common for 24 VDC output | Common terminal for [P24S]. | — |
| | | ST1<br>ST2 | STO input 1<br>STO input 2 | STO input terminal.<br>Refer to "14.1 Using the Safety Function STO (Safe Torque Off)" for more information. | [ST1/2] - [CMS] voltage:<br>ON voltage: Min. 15 VDC<br>OFF voltage: Max. 5 VDC<br>Maximum allowable voltage :27 VDC<br>Load current: 5.8 mA (at 27 VDC)<br>Internal resistance: 4.7 kΩ |
| | | 11<br>[EDM] | STO confirmation output | When EDM function switch is turned on, output terminal 11 switches to the EDM output signal. Refer to "14.1 Using the Safety Function STO (Safe Torque Off)" for more information. | Open collector output<br>[EDM] - [CM2]<br>Maximum allowable voltage: 27 VDC<br>Maximum allowable input current: 50 mA<br>Voltage drop when turn ON: 4 VDC or less |

## 5.4.2 Recommended Wire Diameter and Wiring Method for Control Circuit Terminals

**Q**

- What are the recommended terminals and how to wire for the control terminal?

**A**

- For the control circuit terminal block, a spring clamp type terminal block is employed.
- For the convenience of wiring and improvement of connection reliability, it is recommended to use ferrule terminals with the following specifications.

**!**

- When mounting the option board, use ferrules without a sleeve and wire it so that they do not hit the option case.

### Recommended wire diameter

| Item | Applicable wire | | |
|---|---|---|---|
| | Solid wire mm² (AWG) | Stranded wire mm² (AWG) | Ferrule terminal mm² (AWG) |
| Control terminal | 0.2 to 1.5 (AWG 24 to 16) | 0.2 to 1.0 (AWG 24 to 17) | 0.25 to 0.75 (AWG 24 to 18) |
| Relay output terminal block | 0.2 to 1.5 (AWG 24 to 16) | 0.2 to 1.0 (AWG 24 to 17) | 0.25 to 0.75 (AWG 24 to 18) |

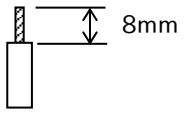


Stripped length for solid wire and stranded wire: approx. 8 mm

### Recommended terminal

■ Ferrule with sleeve

| Wire size mm² (AWG) | Ferrule model*1 | L1 [mm] | L2 [mm] | ϕd [mm] | ϕD [mm] |
|---|---|---|---|---|---|
| 0.25 (24) | AI 0,25-8YE | 8 | 12.5 | 0.8 | 2.0 |
| 0.34 (22) | AI 0,34-8TQ | 8 | 12.5 | 0.8 | 2.0 |
| 0.5 (20) | AI 0,5-8WH | 8 | 14 | 1.1 | 2.5 |
| 0.75 (18) | AI 0,75-8GY | 8 | 14 | 1.3 | 2.8 |

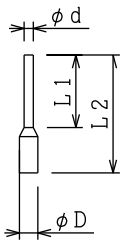


■ Ferrule without sleeve

| Wire size mm² (AWG) | Ferrule model*1 | L1 [mm] | L2 [mm] | ϕd [mm] | ϕD [mm] |
|---|---|---|---|---|---|
| 0.5 (20) | A 0,5-8 | 7.3 | 8 | 1.0 | 2.1 |
| 0.75 (18) | A 0,75-8 | 7.3 | 8 | 1.2 | 2.3 |

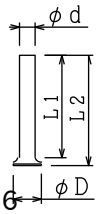


*1. Manufacturer: Phoenix Contact GmbH & Co. KG Crimping tool: CRIMPFOX 6

## Method of wiring/detaching wires

(1)Push the orange part on the control terminal block with a slotted screwdriver (with a wide of 2.5 mm or less). (Insertion hole will open)

(2)Plug in the wire or ferrule terminal to the wire insertion hole (round hole) while pressing the orange part with a slotted screwdriver.

(3)The wire is connected to the circuit when release the screwdriver.

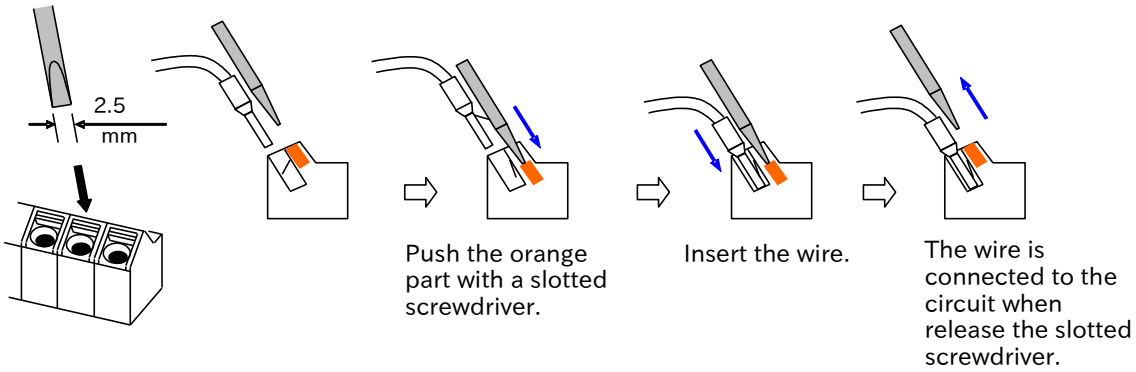


- When pulling out the wire, press the orange part with a slotted screwdriver.

## 5.4.3 Switching Sink/Source Logic and Connecting External Power Supply/Programmable Controller

**Q**

- How can the sink/source logic of the I/O terminals be switched?
- How can an external power supply or external devices such as a programmable controller (PLC) be connected to the I/O terminals?

### Method of switching sink/source logic for intelligent input terminals

- To switch the logic of the input terminals to source logic, remove the short-circuit wire between [P24] terminal and [PLC] terminal on the control terminal and connect it between [PLC] terminal and [L] terminal. (The factory default of the logic depends on the destination region.)
- Refer to the figure below for wiring when using an external power supply and wiring with external devices such as programmable controllers.

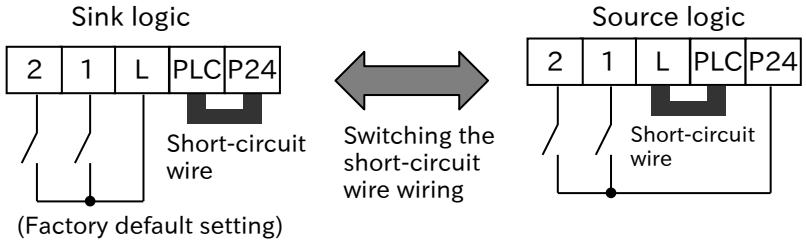


### Connecting the intelligent input terminals to a programmable controller

#### Sink logic

| When using the inverter's internal power supply | When using an external power supply (Remove the short-circuit wire from the control terminal.) |
|---|---|
| 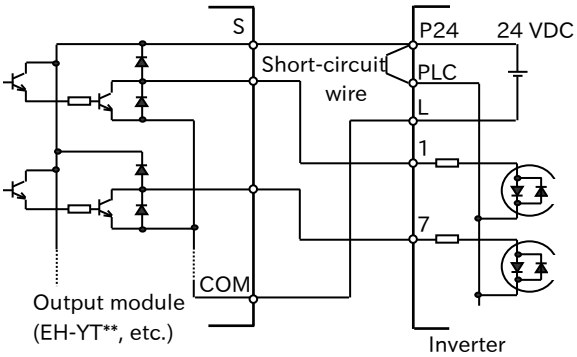 | 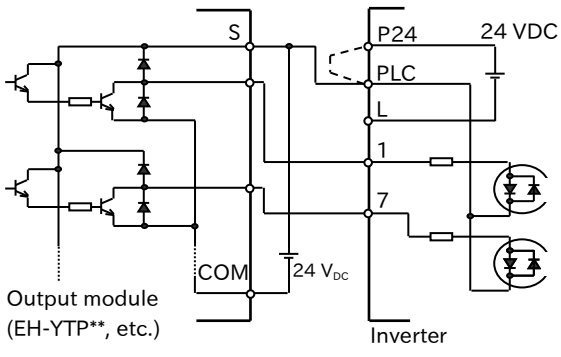 |





#### Source logic

| When using the inverter's internal power supply | When using an external power supply (Remove the short-circuit wire from the control terminal.) |
|---|---|
| 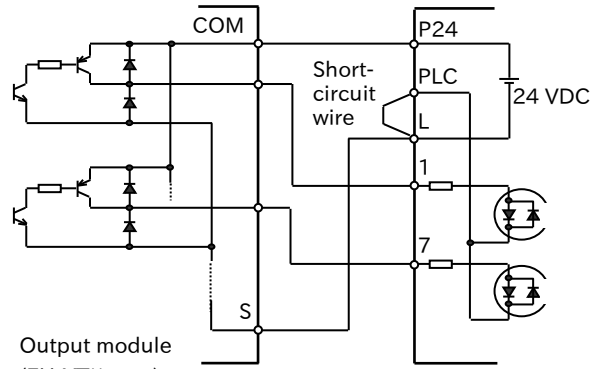 | 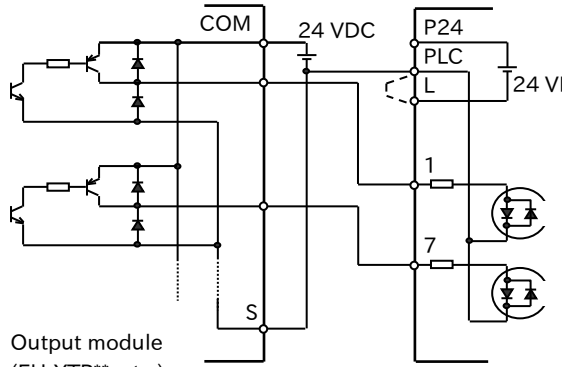 |

## ■ No-voltage switch

| When using the inverter's internal power supply | When using an external power supply (Remove the short-circuit wire from the control terminal.) |
|---|---|
| 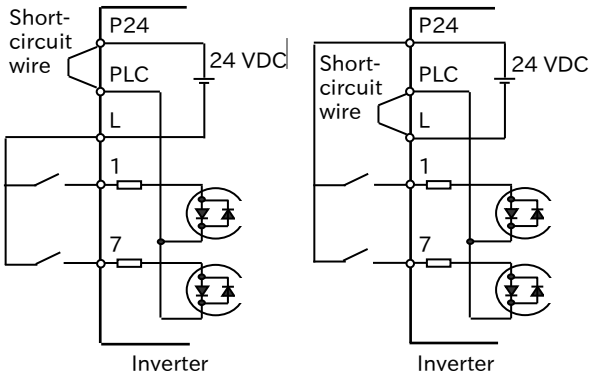 | 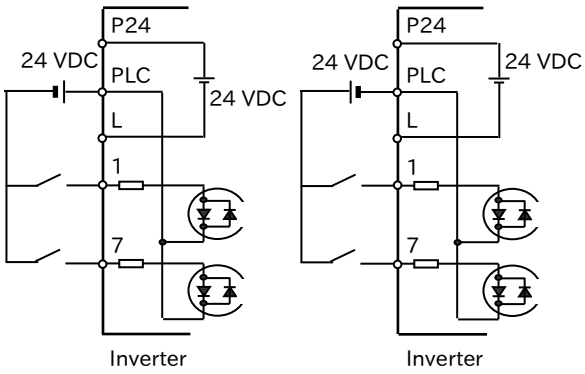 |



## Connecting the intelligent output terminals to a programmable controller

### ■ Sink logic

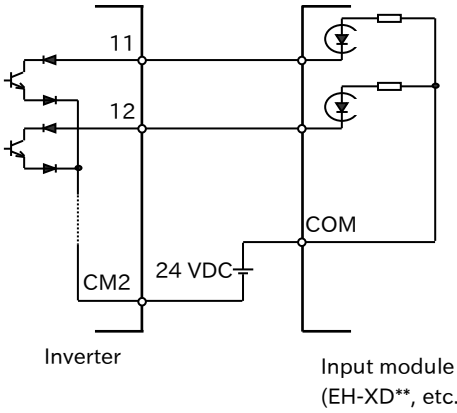



### ■ Source logic

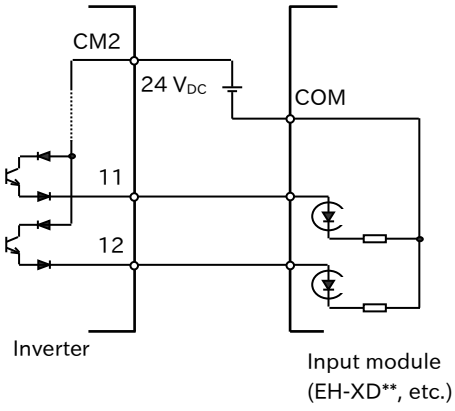

## Cautions when using multiple inverters

- If a common input (switch, etc.) is used for multiple inverters and the timing of power-on is different, the current may run around as shown in the figure below, and it may be recognized as ON even if the input is OFF. In that case, be sure to insert a diode (rated 50 V/0.1 A) in the positions shown in the figure to prevent the current flow round.

### Sink logic

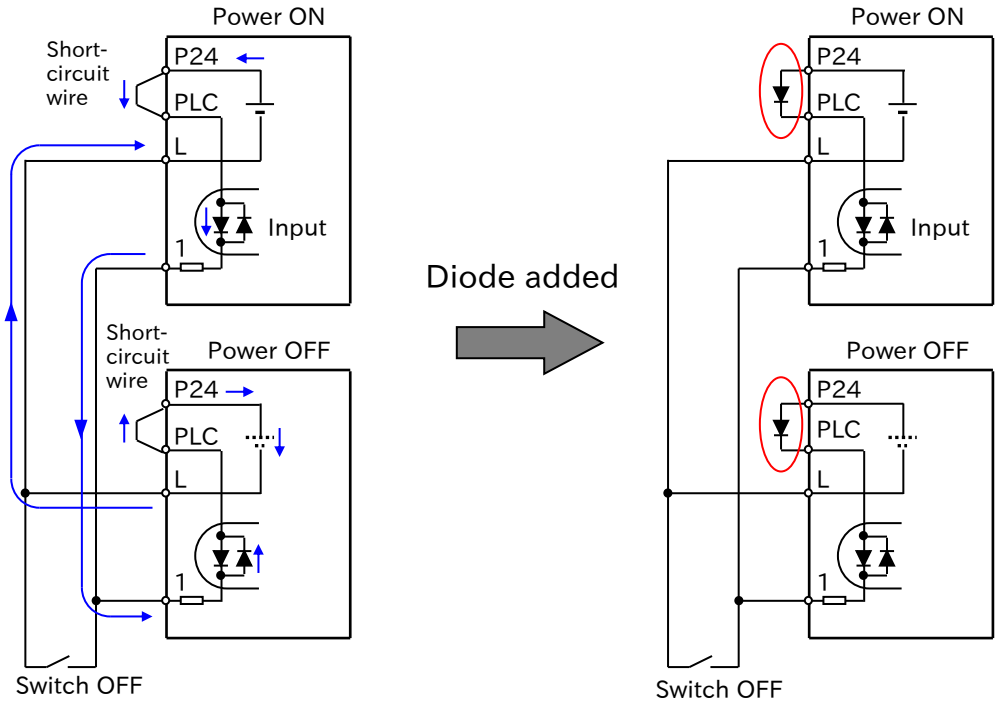


If there is no diode, the current will flow round and the input will turn on even though the switch is off.

Diodes are installed instead of the short-circuit wires to prevent current flow round.

### Source logic

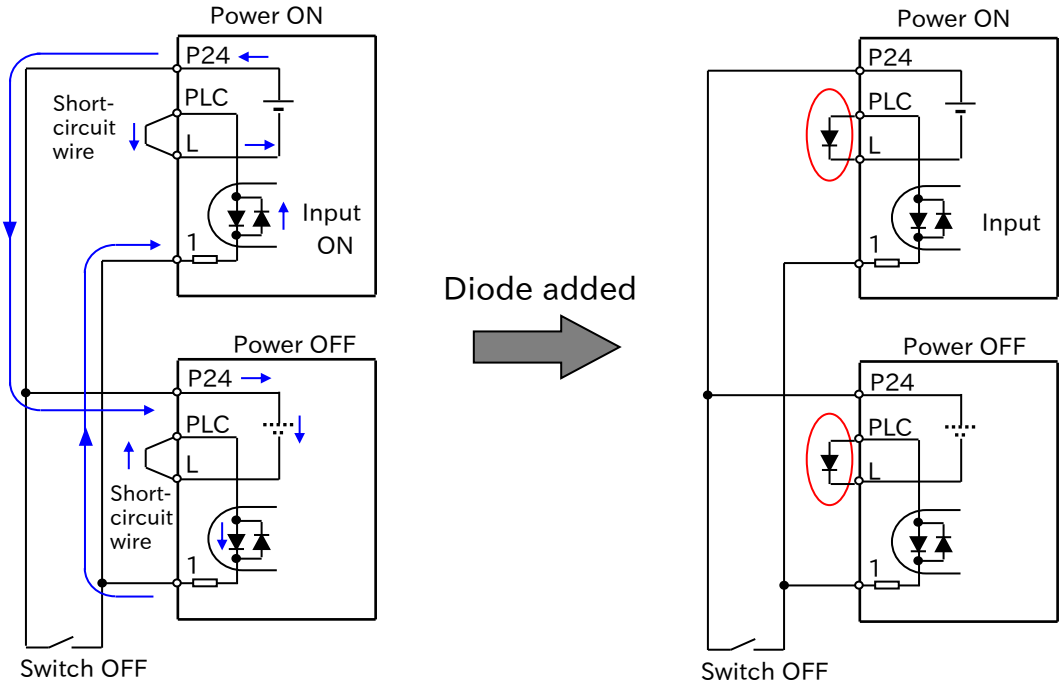


If there is no diode, the current will flow round and the input will turn on even though the switch is off.

Diodes are installed instead of the short-circuit wires to prevent current flow round.

(Memo)

6

# Chapter 6 Operation Check/Residual Risk

This chapter describes residual risks during operation and items to be checked.
The customer who uses the product should appropriately conduct risk assessment before trial run and using the product, and properly protect their personnel and systems.
Although this chapter describes all the possible measures to make sure, it does not cover all the risks in your systems. Please note that we will bear no responsibility for damages resulting from causes described in this chapter. Be sure to conduct risk assessment of the system equipped with this product.
Also carefully read "Chapter 1 Safety Instructions/Risks" and the corresponding chapters, and pay attention to safety.

6.1 Overview of Residual Risk Checklist ..... 6-1-1
6.2 Residual Risk Checklist ..... 6-2-1

# 6.1 Overview of Residual Risk Checklist

- The residual risk checklist is classified according to the following two definitions based on "Chapter 1 Safety Instructions/Risks".

| | |
|---|---|
| DANGER | Indicates that incorrect handling may cause hazardous situations, which have a high possibility of resulting in serious personal injury or death, and may result in major physical loss or damage. |
| CAUTION | Indicates that incorrect handling may cause hazardous situations, which may result in moderate or slight personal injury or damage, and may result in only physical loss or damage. |

- Even the content described as "⚠CAUTION" may lead to serious danger depending on the situation. They all contain important information. Be sure to follow these instructions.
- Other notes are also described with "⚠". Pay attention to this information and be sure to observe it.

## Check points for residual risk

- Please check for residual risks before turning on the power supply upon completion of the installation.

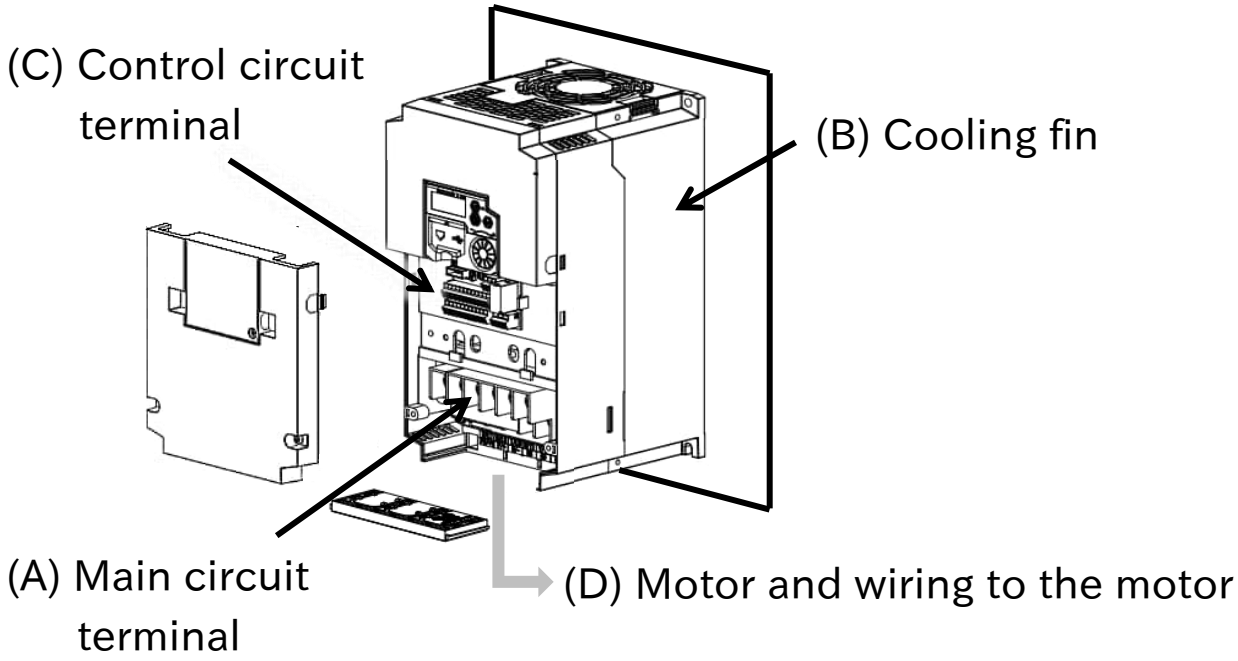

# 6.2 Residual Risk Checklist

| No. | Operation stage | Work | Target section | Residual risk | Details of hazard | Protection measures | ☑ |
|---|---|---|---|---|---|---|---|
| 1 | Installation | Installation | (B) | CAUTION | Damage caused by careless carrying. | Do not drop the product. Do not carry the inverter in a manner that applies force to the cover or the keypad. | ☐ |
| 2 | Installation | Installation | General | CAUTION | Reduction of component life due to use in a location exposed to direct sunlight or at a temperature outside of the specification range. | Ensure that the ambient temperature is within the standard specification range in the whole year by means of cooling and ventilation. | ☐ |
| 3 | Installation | Installation | General | CAUTION | Short-circuit failure due to use in a location with humidity or condensation outside of the specification range. | Ensure that the ambient temperature is within the standard specification range in the whole year by means of cooling and ventilation. Otherwise, install the product in a location free from condensation. | ☐ |
| 4 | Installation | Installation | (B) | DANGER | The cooling fin that is heated to exceed 150˚C ignites a flammable wall. | Install the inverter on an inflammable metal wall. | ☐ |
| 5 | Installation | Installation | General | CAUTION | Component failure due to ingress of dust, corrosive gas, or other substances. | Install the inverter inside a totally enclosed panel. | ☐ |
| 6 | Installation | Installation | General | CAUTION | Reduction of a component life due to degradation of cooling capability by horizontal installation. | Install the inverter vertically. | ☐ |
| 7 | Installation | Installation | General | CAUTION | When the fin of the inverter is installed outside of cabinet, the cooling fan fails due to droplet, oil mist, etc. | When the fin of the inverter is installed outside of cabinet, install it in a location free from droplet, oil mist, etc. | ☐ |
| 8 | Installation Maintenance | Wiring | (A) | DANGER | The arc discharge due to screws loosened by vibration, and ignites the internal components. | Check screws are appropriately tightened on a regular basis. | ☐ |
| 9 | Installation Maintenance | Wiring | General | DANGER | The arc discharge due to screws loosened by vibration, and ignites the flammable materials. | Check screws are appropriately tightened on a regular basis. Do not place flammable materials around the installed inverter. | ☐ |
| 10 | Use Maintenance | Wiring Inspection | (A) | DANGER | When the cover is removed, electric shock is caused in a high-voltage section. | Do not remove the cover when power is supplied. After power is turned off, wait 10 minutes or more to perform working. | ☐ |
| 11 | Use Maintenance | Wiring Inspection | (C) | DANGER | When the operator removes the cover, electric shock is caused when a tool ouches a high-voltage section. | Do not remove the cover when power is supplied. After power is turned off, wait 10 minutes or more to perform working. | ☐ |
| 12 | Installation | Wiring | (D) | DANGER | Due to long wiring length, the insulation of the motor degraded by surge, which eventually burns the motor. | If the wiring length exceeds 20 m, shorten the motor wiring length. Or install the optional LCR filter and output-side AC reactor. | ☐ |
| 13 | Installation | Wiring | (D) | DANGER | By connecting a motor to the different voltage class inverter, insulation of the motor degraded, which eventually burns the motor. | Match the voltage class of the inverter and the motor. | ☐ |

| No. | Operation stage | Work | Target section | Residual risk | Details of hazard | Protection measures | ☑ |
|---|---|---|---|---|---|---|---|
| 14 | Installation | Wiring | (D) | DANGER | Due to unstable output caused by imbalance of power supply voltage, undervoltage, extreme voltage drop or aging of motor, the motor burns, and eventually the inverter fails. | Check the receiving voltage of inverter, power receiving method, and power supply capacity are appropriate. | ☐ |
| 15 | Use Maintenance | Wiring Inspection | (D) | DANGER | The short circuit failure caused by degradation of motor insulation, cracking of aged wires, etc., causes phase loss on inverter output, motor cable, and motor. Driving the inverter in such a condition burns the motor, and eventually the inverter fails. | Check there is no phase loss by inspection. | ☐ |
| 16 | Installation Use | Setting | (D) | DANGER | By performing inappropriate parameter settings, high current flows in the motor, causing it to burn. | Set appropriate values for parameters related to output to the motor, such as parameters described in "Chapter 8 Mandatory Setting for Motor Drive and Test Run" (load rating, base frequency, motor rated voltage, motor constant, and electronic thermal), control method, torque boost ([A041] to[A047][*1]), and DC output setting ([A051] to [A058]). | ☐ |
| 17 | Use | Operation | (D) | DANGER | The stopped motor automatically starts running. | To restart the motor after stopping it by a function, define it in the system. | ☐ |
| 18 | General | General | General | DANGER | Damage and injury caused by hidden risks. | Conduct risk assessment on the system, and check that the fail-safe function is incorporated into the system. | ☐ |
| 19 | General | General | General | DANGER | Damage and injury caused by failure to obtain additional information concerning risks. | Obtain the latest version of User's Guide so that necessary information can be checked. Communicate information to the end user as necessary. | ☐ |

* Installation, wiring and setting work need to be performed by specialized technicians.

*1. "2nd-motor control [SET]" target parameter. Replace with the 2nd-control parameter if necessary.

7

# Chapter 7 Keypad and Related Functions

This chapter describes how to use keypad on the inverter main unit and related functions.
Before performing each work, carefully read "Chapter 1 Safety Precautions/Risks" and each corresponding chapter, and carry out the work with caution.


**7.1 How to Use Keypad ..... 7-1-1**

7.1.1 Name and Content of Each Part ..... 7-1-1

7.1.2 Key Operation System ..... 7-1-3

7.1.3 Example of Parameter Setting Key Operation ..... 7-1-4

**7.2 Functions Related to Keypad ..... 7-2-1**

7.2.1 Restrict Display Parameter ..... 7-2-1

7.2.2 Initialize the Parameters ..... 7-2-3

7.2.3 Prohibit Parameter Changes ..... 7-2-5

7.2.4 Protecting Data with Passwords ..... 7-2-6

7.2.5 Setting the Initial Keypad Display ..... 7-2-8

7.2.6 Automatic Registration of Changed Parameter History ..... 7-2-9

7.2.7 Display Lock [DISP] Function ..... 7-2-10

7.2.8 Remote Operator Functions ..... 7-2-11

# 7.1 How to Use Keypad

## 7.1.1 Name and Content of Each Part

- The names and descriptions of the parts of Keypad are shown below.

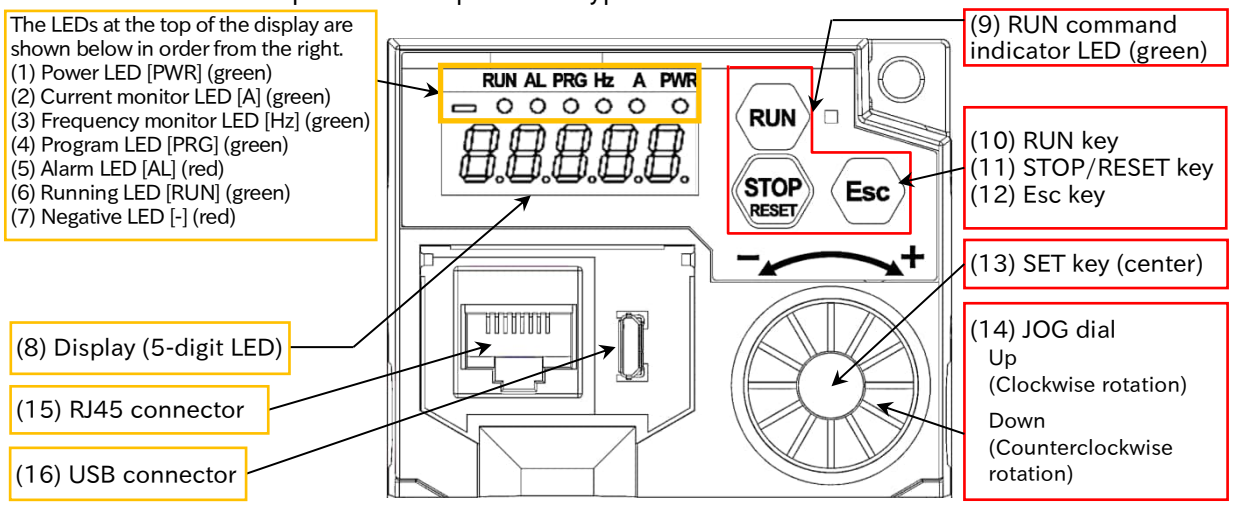


| Name | Description |
|---|---|
| (1) Power LED [PWR] ● (green) | Lights up (green) while the inverter is powered on. |
| (2) Current monitor LED [A] ●(green) | Lights up (green) when the displayed data is current. |
| (3) Frequency monitor LED [Hz] ● (green) | Lights up (green) when the displayed data is frequency. |
| (4) Program LED [PRG] ● (green) | • Lights up (green) when the display indicates the data (set value) that can be changed.<br>• Blinks when the set value is inconsistent. Refer to "15.3 Troubleshooting for Warning Functions Related Error". |
| (5) Alarm LED [AL] ● (red) | Lights up (red) when the inverter trips. Refer to "Chapter 15 Tips/FAQ/Troubleshooting" for more information about tripping. |
| (6) Running LED [RUN] ●(green) | • Lights up (green) when the inverter is running (since it lights up under the OR conditions of [With RUN command] and [While inverter outputs], it also lights up during deceleration after RUN command is turned off).<br>• Even if RUN command source is Keypad's RUN key, this LED blinks when RUN key is pressed while operation cannot be performed due to some function. For details, refer to "15.3 Troubleshooting for Warning Functions Related Error". |
| (7) Negative LED [-] ●(red) | Lights up (red) when the data on the display is negative. |
| (8) Display (5-digit LED) | Displays data (red) such as various parameters and frequency setting values. |
| (9) RUN command indicator LED ● (green) | Lights up (green) when RUN command source is "Keypad". (Keypad's RUN key is enabled.) |
| (10) RUN key | Operates the inverter. However, it is valid when RUN command source is "Keypad". The operating direction is set in "RUN key command rotation direction [F004]". |
| (11) STOP/RESET key | • Decelerates and stops the inverter. By "STOP/RESET-key enable [b087]", operation stop by this key can be switched enabled/disabled.<br>• If the inverter is tripping, it will reset (return from trip state). |

| Name | Description |
|---|---|
| (12) Esc key | • When the parameter code is displayed, it changes to the next function group, and the last set parameter code for each function group is displayed. (The last set parameter code is memorized for each function group. It is effective even after the power is shut off.)<br>• When the data is displayed, it cancels the setting and return to the parameter code display.<br>• Regardless of the display screen, press and hold (for approx. 3 seconds) to display the data (output frequency) of "Output frequency monitor [d001]".<br>• When the remote operator (OPE-SR, OPE-SBK, OPE-SR mini, WOP) is connected, press and hold the main unit Esc key (1 second or longer) to move the operation to the main unit operator. Press and hold the Esc key again to return to the external operator. |
| (13) SET key | • When the parameter code is displayed, it moves to the data display.<br>• When the data is displayed, the setting is determined and stored, and the display returns to the parameter code display. Also the last parameter pressed the SET key is memorized and that parameter can be displayed when the power is turned on. For more information, see "7.2.5 Setting the Initial Keypad Display".<br>• For each function group, the last set parameter is memorized and becomes the first display parameter code when moving the function group using the Esc key. |
| (14) JOG dial | • Increases or decreases the parameter code or setting data. Rotate clockwise to increase and rotate counterclockwise to decrease.<br>• The degree of increase/decrease and carry of parameter code and setting data corresponding to the rotation speed of the JOG dial can be set with "JOG sensitivity [C117]" and "JOG carry sensitivity [C118]". |
| (15) RJ45 connector | Connector for the optional remote operator (for RS-422 only). When the remote operator is connected, the keys on the main unit do not work. The data to be displayed on the (8) display at this time is set in "Display while ext. operator connected [b150]".<br>Note: Connect and disconnect the remote operator with the power off. |
| (16) USB connector | Connector (USB, Micro-B connector) for PC.<br>Used to connect to the inverter configuration software ProDriveNext. |

## 7.1.2 Key Operation System

### How to select parameter and monitor/change data using Keypad

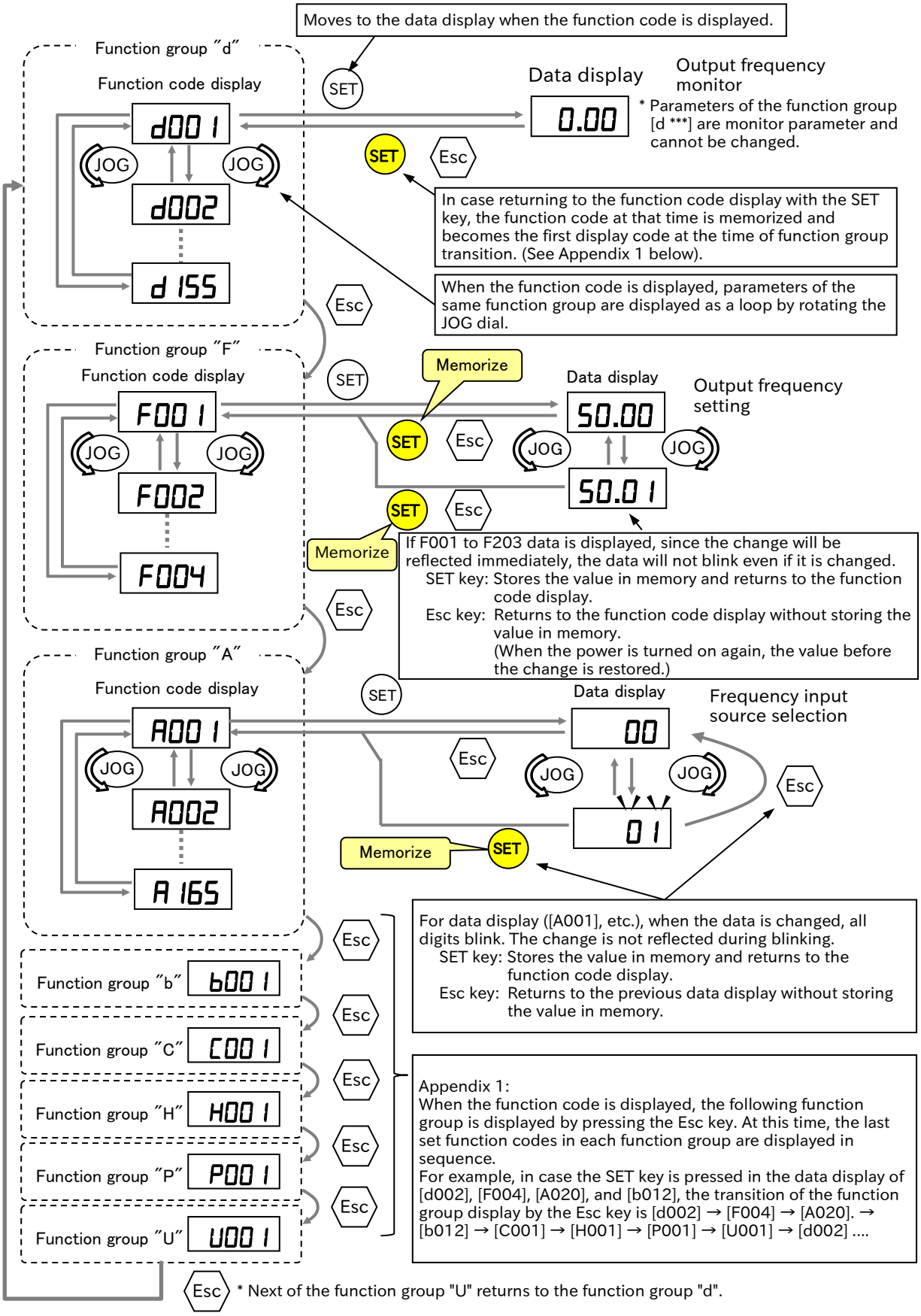

## 7.1.3 Example of Parameter Setting Key Operation

### Example of operation when changing the setting value of a parameter (basic operation mode)

- The following shows an example of changing the "RUN command input source selection, 1st-motor [A002]" from "Operator (02)" to "Control terminal (01)" from the status of "0.00" (factory-default setting) in the data of "Output frequency monitor [d001]" when the power is turned on.

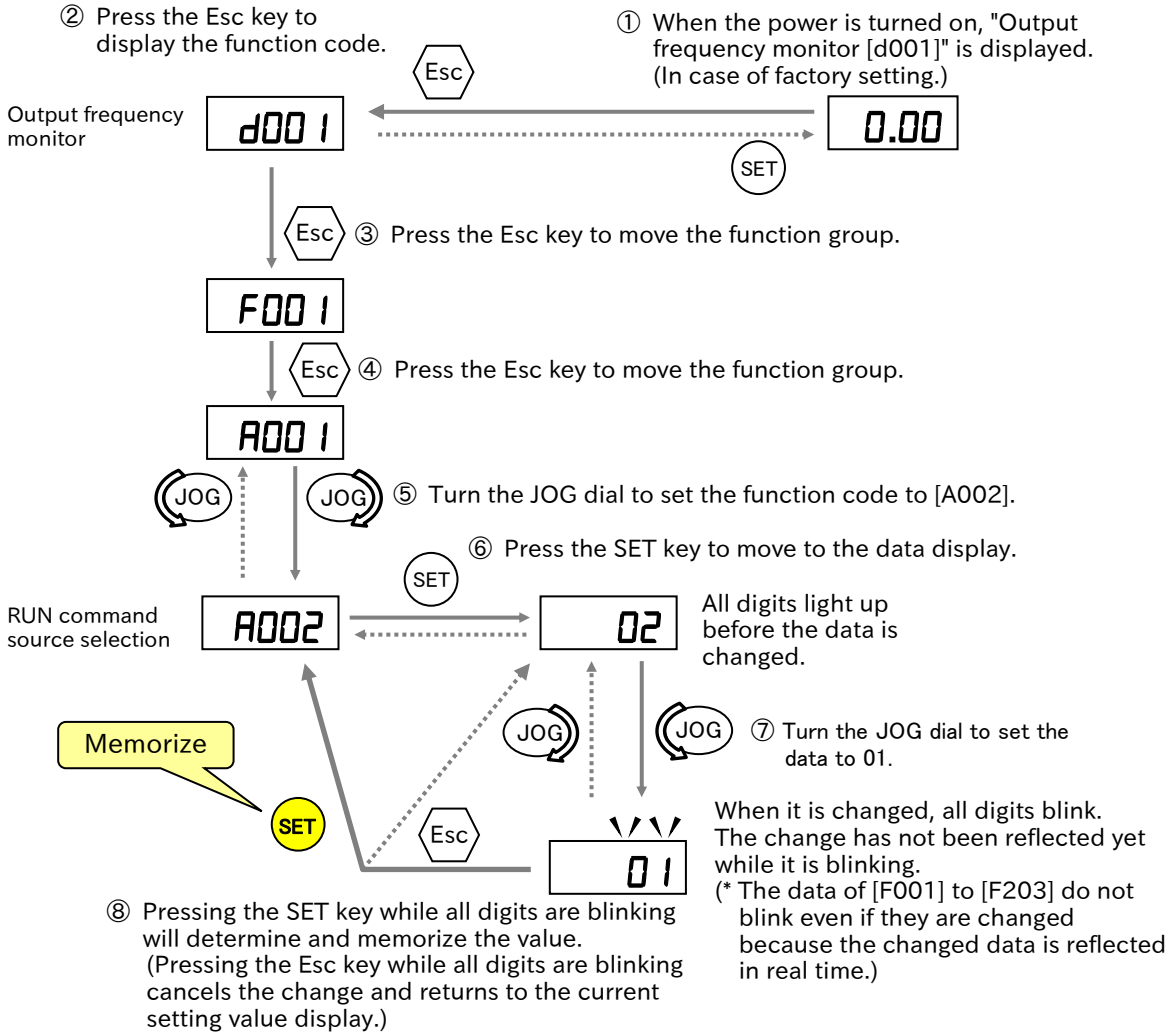


Reference:

- By pressing and holding the Esc key (for about 3 seconds), the display jumps to the data display of "Output frequency monitor [d001]".
- If there are parameters that cannot be displayed or changed, "Display restriction selection [b037]" or "Soft-Lock selection [b031]" may be set. For more information, see "7.2 Functions Related to Keypad".

### Display when changing setting data

- When the SET key is pressed after changing the setting, the parameter and data are displayed alternately at short intervals so that it can be confirmed that the data has been changed, and then the display returns to the parameter display.

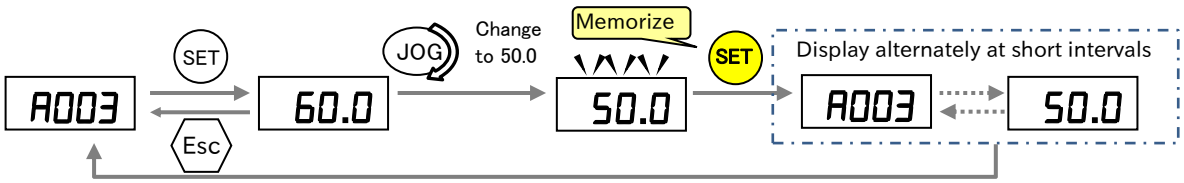

## Changing function code and data by digit (individual input mode)

- Function code selection and data change are also possible by the individual input mode, in which the value is incremented or decremented for each digit by specifying the digit to be incremented or decremented. This function is useful for changing the setting value with a large number of digits, etc.

① Press and hold the SET key (3 seconds or more) to enter the individual input mode, and the most significant digit blinks. (Press and hold the SET key again to return to the basic operation mode.)
② In the individual input mode, move the edit digit to the right with the SET key, move the edit digit to the left with the Esc key, and decrease/increase the value with counterclockwise/clockwise of the JOG dial. (For function codes, increase/decrease the value as d ⇔ A ⇔ b ⇔ C....)
③ Pressing the SET key at the least significant digit determines the parameter and switches to the data display. However, if the function code does not exist, it will return to blinking in the most significant digit.
* If the Esc key is pressed at the most significant digit, the operation mode returns to the basic operation mode.

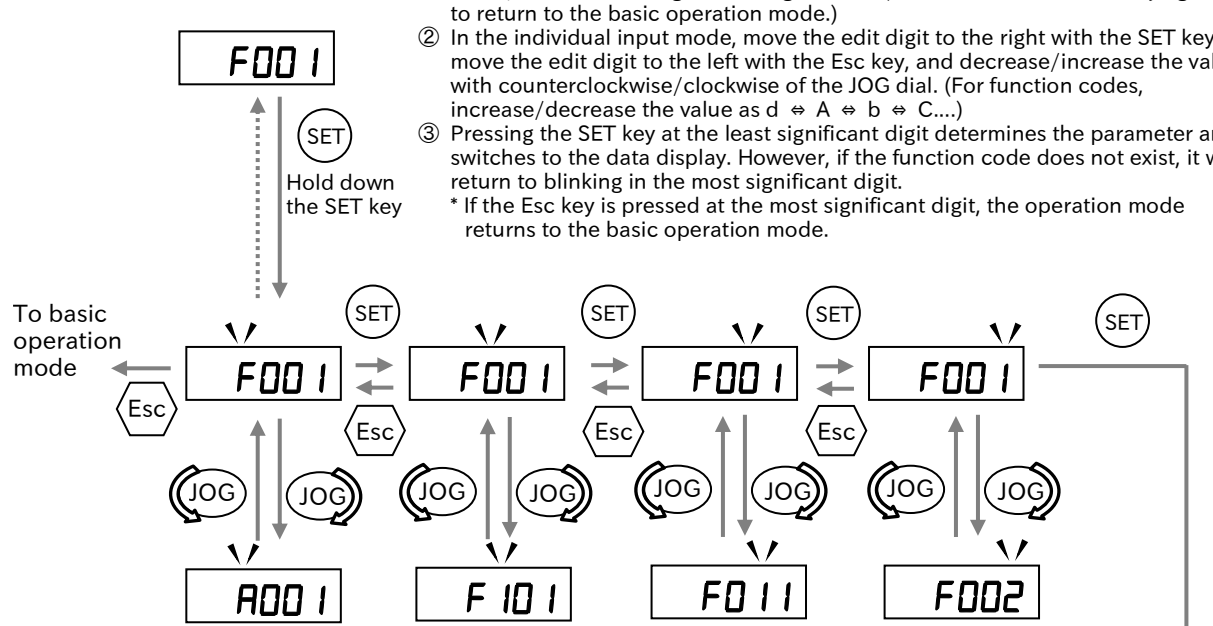


④ As in ① above, pressing and holding the SET key (for more than 3 seconds) enters the individual input mode. As in ②, use SET/Esc keys to move edit digit, and use the JOG dial to increase or decrease values.
⑤ When pressing the SET key at the least significant digit, all digits blink. When the SET key is pressed in this state, the change data is stored. Press the Esc key to cancel the change.

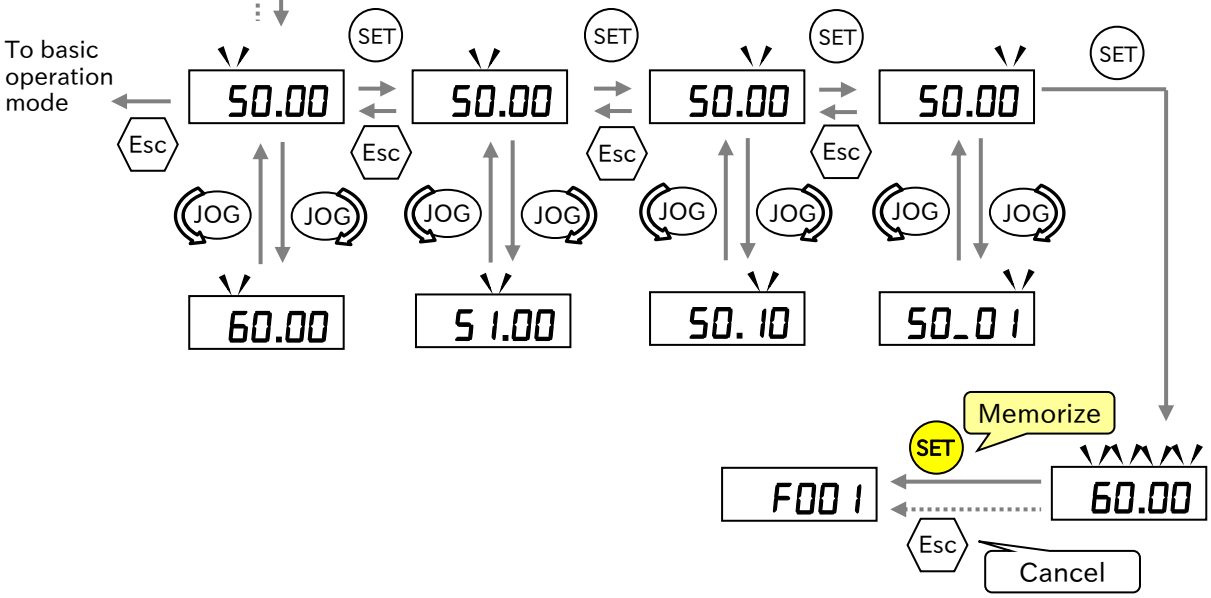


- The individual input mode is valid for the function code and numeric data parameters. It is invalid when the setting range is a number selection such as 01, 02, 03....

## Digit movement display mode

- The main unit's keypad display basically displays the top five digits, but the invisible digits can be temporarily visible by the following operations.

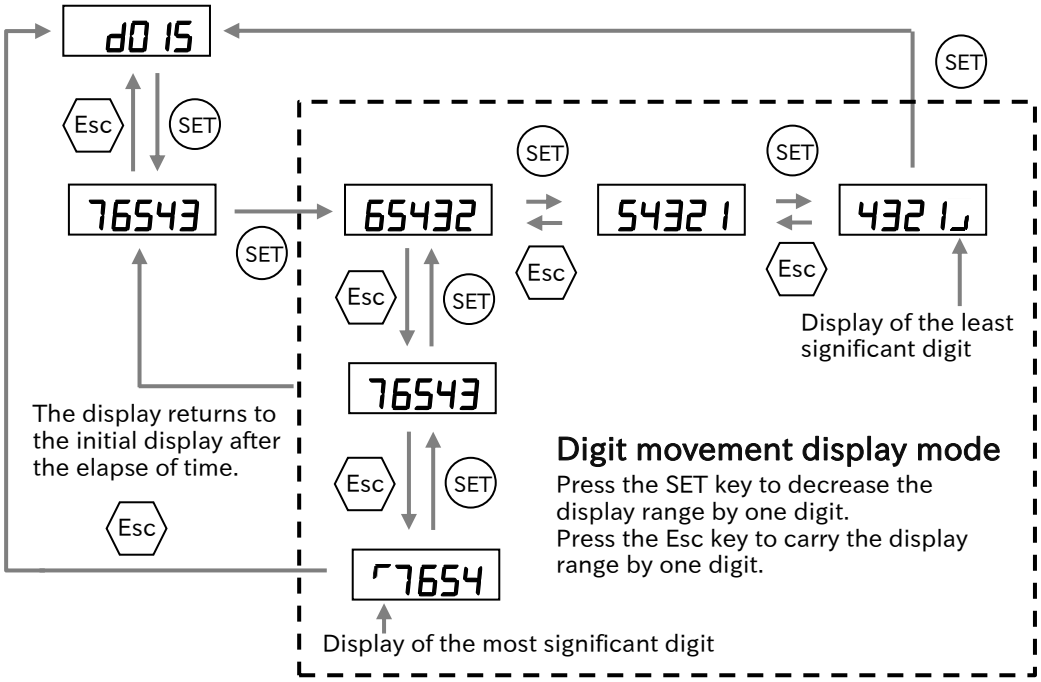


- The degree of increase/decrease of the value when the JOG dial is turned can be adjusted with the following parameters.
  Adjust the value as necessary.

| Code | Item | Description | Data |
|---|---|---|---|
| [C117] | JOG sensitivity | Set the degree of increase/decrease of the value with the JOG dial. The larger this setting, the greater the degree of increase/decrease when turning the JOG dial. | 1 to 24 |
| [C118] | JOG carry sensitivity | Set the degree of carry (carry down) when increasing or decreasing by the JOG dial. | 1 to 100 |

# 7.2 Functions Related to Keypad

## 7.2.1 Restrict Display Parameter

Q

- How can display only the necessary parameters?
- How can display fewer parameters?
- How can display only the changed parameters?

A

- Parameters displayed in the keypad can be partially hidden by setting "Display restriction selection [b037]".
- To show all parameters, set [b037] to "Full display (00)".
- To display parameters that have been changed from the values at initialization, set [b037] to "Data comparison display (03)".
- [b037] setting can be password protected. For details, see "7.2.4 Protecting Data with Passwords".

| Code | Item | Description | Data |
|---|---|---|---|
| [b037] | Display restriction selection | Full display (initial value) | 00 |
| | | Function-specific display | 01 |
| | | User settings (Parameters set in [U001] to [U032] and [d001], [F001], [b037], [b190] and [b191] are displayed.) | 02 |
| | | Data comparison display | 03 |
| | | Monitor only ([d ***], [b037], [b190] and [b191]) | 05 |
| [U001] to [U032] | User-parameter 1 selection to User-parameter 32 selection | No registration | no |
| | | Register the parameter code to be displayed.<br>Up to 32 parameters can be registered. | [d001] to [P196] |

### ■ Details of each setting of "Display restriction selection [b037]"

| "Display restriction selection [b037]" setting | Details |
|---|---|
| Full display (00) | Displays all parameters. |
| Function-specific display (01) | Use this when you want to hide the parameters of unused functions and display fewer parameters. If a specific function is not selected, the parameters associated with that function are hidden.<br>Refer to the table on the next page for details of display conditions. |
| User Settings (02) | Use to display only arbitrary parameters set by the user.<br>Up to 32 arbitrary parameters can be registered in "User-parameter 1 to 32" ([U001] to [U032]).<br>When "Display restriction selection [b037]" is set to "User settings (02)" after registration, only parameters registered in [U001] to [U032] and [d001], [F001], [b037], [b190] and [b191] are displayed. |
| Data comparison display (03) | Used to know the parameter changed from the factory setting.<br>All monitor displays [d ***] and [F001], [b037], [b190] and [b191] are also displayed. |
| Monitor only (05) | Only all monitor displays [d ***], [b037], [b190], and [b191] are displayed. |

■ Conditions for the function-specific display ([b037] = 01) and displayed parameters

| No. | Display conditions | | Parameters displayed when conditions are met |
|---|---|---|---|
| 1 | Display when "2nd-motor control [SET] (08)" is assigned to any of the input terminal functions | [SET] is assigned to any of [C001] to [C007]. | [F202], [F203], [A201] to [A204], [A220], [A244], [A245], [A261], [A262], [A281], [A282], [A292] to [A296], [b212], [b213], [b221] to [b223], [C241], [H202] to [H206] |
| 2 | Display when the control mode for 1st-motor is constant torque or reduced torque of V/f control | [A044] = 00 or 01 | [A041] to [A043], [A046], [A047] |
| 3 | Display when the control mode for 2nd-motor is constant torque or reduced torque of V/f control | [SET] is assigned to any of [C001] to [C007] and [A244] = 00 or 01. | [A241] to [A243], [A246], [A247] |
| 4 | Display when the control mode for 1st-motor/2nd-motor is free V/f | [A044] = 02.<br>Or [SET] is assigned to any of [C001] to [C007], and [A244] = 02. | [b100] to [b113] |
| 5 | Display when the control mode for 1st-motor is sensorless vector control | [A044] = 03 | [d009], [d010], [d012], [b040] to [b046], [C054] to [C059], [H001], [H005],<br>[H020] to [H024], [H030] to [H034], [P033], [P034], [P036] to [P041] |
| 6 | Display when the control mode for 2nd-motor is sensorless vector control | [SET] is assigned to any of [C001] to [C007] and [A244] = 03. | [d009], [d010], [d012], [b040] to [b046], [C054] to [C059], [H001], [H205],<br>[H220] to [H224], [H230] to [H234], [P033], [P034], [P036] to [P041] |
| 7 | Display when free electronic thermal function is used | [b013] = 02.<br>Or [SET] is assigned to any of [C001] to [C007] and [b213] = 02. | [b015] to [b020] |
| 8 | Display when DC braking is used | [A051] =01 or 02.<br>Or "External DC braking [DB] (07)" is assigned to any of [C001] to [C007]. | [A052] to [A059] |
| 9 | Display when PID is used | [A071] = 01 or 02. | [d004], [d153], [d155],<br>[A072] to [A079], [A156], [A157], [C044], [C052], [C053] |
| 10 | Display when curve acceleration/deceleration is used | [A097] = 01 to 04.<br>Or [A098] = 01 to 04. | [A131], [A132], [A150] to [A153] |
| 11 | Display when instantaneous power failure non-stop function is used | [b050] = 01 to 03 | [b051] to [b054] |
| 12 | Display when brake control function is used | [b120] = 01 or 02 | [b121] to [b127] |
| 13 | Display when overvoltage suppression function during deceleration is used | [b130] =01 or 02 | [b131] to [b134] |
| 14 | Display when simple positioning control is used | [P003] = 01 | [d008], [P004], [P011], [P012],<br>[P014] to [P017], [P026], [P027],<br>[P060] to [P073], [P075], [P077],<br>[P080] to [P083], [H050], [H051] |
| 15 | Display when EzSQ is used | [A017] = 01 or 02 | [d023] to [d027], [P100] to [P131] |
| 16 | Display when EzCOM is used | [C096] =01 or 02 | [C098] to [C100], [P140] to [P155] |

## 7.2.2 Initialize the Parameters

**Q**

- How to set again from the beginning or return to the factory default setting?
- How to clear the trip history?
- How to initialize settings other than I/O terminal functions or communication settings?

**A**

- After setting "Initialize mode selection [b084]" and "Initialize target selection [b094]", by setting "Execute initialization and mode selection [b180]" to "Initialization (01)", you can clear the trip history or initialize the parameters and return to the factory default settings.
- "Accumulated RUN time monitor [d016]," "Accumulated power-on time monitor [d017]," "Load type selection [b049]," "Initialize data selection [b085]," and "Initialize target selection [b094]" are not initialized.
- EzSQ user parameter U(00) to U(31) ([P100] to [P131]) are initialized only when "Trip history clear + data initialization + EzSQ program initialization (04)" is selected for "Initialize mode selection [b084]".

| Code | Item | Description | Data |
|---|---|---|---|
| [b084] | Initialize mode selection | Initialize mode disabled | 00 |
| | | Trip clear | 01 |
| | | Data initialization | 02 |
| | | Trip history clear + data initialization | 03 |
| | | Trip history clear + data initialization + EzSQ program initialization | 04 |
| [b085] | Initialize data selection*3 | Pattern 0 | 00 |
| | | Pattern 1 | 01 |
| | | Pattern 3 | 03 |
| [b094] | Initialize target selection | All data (fully initialized) | 00 |
| | | Initialization*1 of all data except I/O terminals and basic communication settings | 01 |
| | | Initialization*2 registered in "User parameter 1 to 32 selection [U001] to [U032]" | 02 |
| | | Initialization for all parameters other than parameters registered in "User Parameter 1 to 32 Selection [U001] to [U032]" and "Display restriction selection [b037]" | 03 |
| [b180] | Execute initialization and mode selection | Initialization disabled (default value) | 00 |
| | | Initialization execution | 01 |

**!**

- Set "Initialization execution (01)" to "Execute initialization and mode selection [b180]" and press the SET key. Initialization starts immediately. Note that the data cannot be restored after initialization.
- When "Display restriction selection [b037]" or "Soft-Lock selection [b031] is set, initialization cannot be performed because initialization parameters cannot be changed. Release the display restriction selection or Soft-Lock before initialization.

*1. When "Initialization target selection [b094]" is set to "Initialization of all data except I/O terminals and basic communication settings (01)", "I/O terminals and basic communication settings" are the parameters shown in the table below.

| | |
|---|---|
| I/O terminal parameters | Input terminal function ([C001] to [C007]), Input terminal active state ([C011] to [C017]), Output terminal function ([C021], [C022], [C026]), Output terminal active state ([C031], [C032], [C036]) |
| Basic communication settings parameters | Main unit RS485 communication related parameters: [C071] to [C078]<br>Parameters related to the respective communication boards of Option: [P044] to [P046], [P048] to [P049]<br>[P180] to [P182], [P185] to [P186], [P190], [P192], [P195] to [P196] |

*2. Parameters registered in "User Parameter 1 to 32 Selection ([U001] to [U032])" are initialized. [U001] to [U032] are not initialized.

*3. The setting of " Initialize data selection [b085]" (Pattern 0/Pattern 1/Pattern 3) is determined by the destination of WJ-C1. Normally, do not change [b085] from the factory-set condition.
For details of the default settings, see "18.2 List of Parameters and Modbus Holding Registers".

## Procedure of initialization (trip history clear + data initialization + EzSQ program initialization)

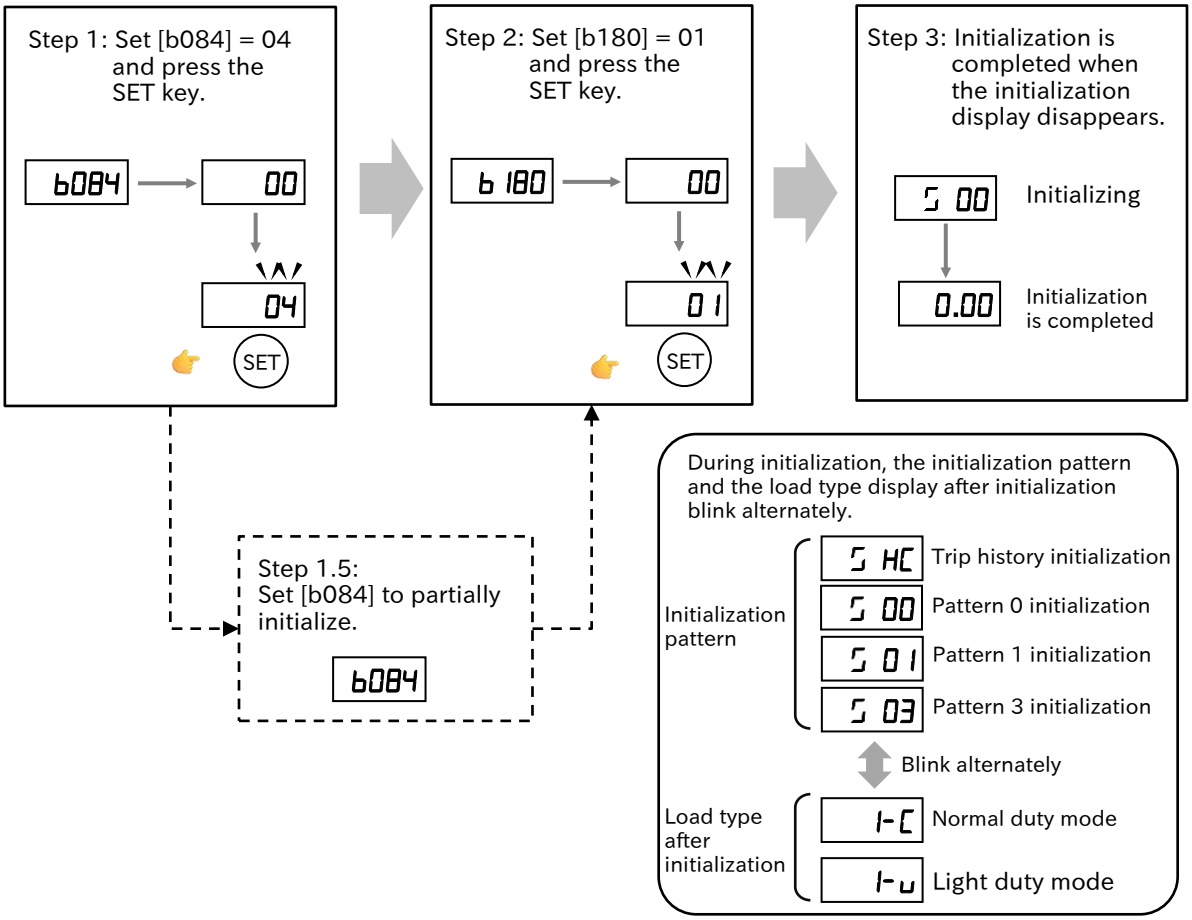


## Procedure to clear the trip history

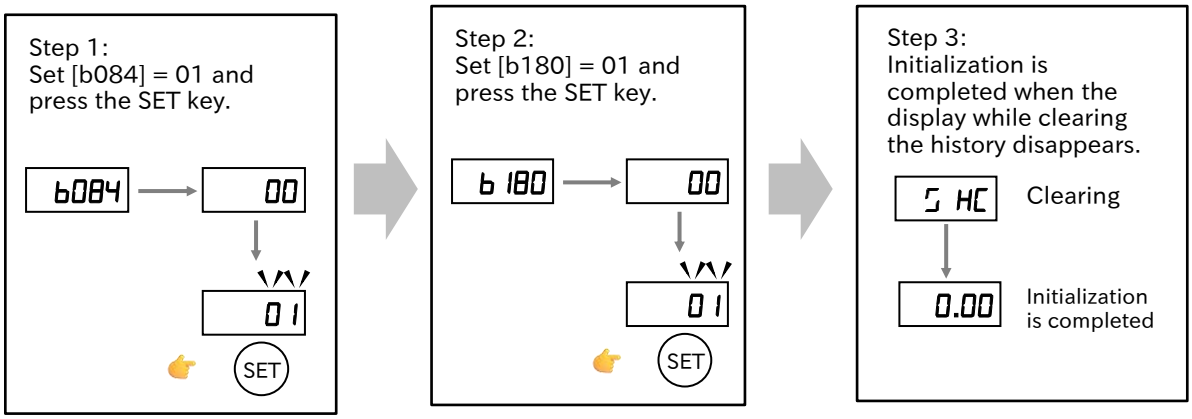


- To prevent accidental initialization, even if "Initialize mode selection [b084]" and "Execute initialization and mode selection [b180]" are set once, it will return to 00 when the initialization is completed or the power is turned on again. Set these parameters each time at initialization.
- Even if the initialization settings are set, the initialization related functions ([b085] and [b094]) and "Load type selection [b049]" are not initialized.

## 7.2.3 Prohibit Parameter Changes

Q
- How to protect the changed parameters?
- How to prevent a parameter from being changed by someone?

A
- Various data changes can be prohibited by the Soft-Lock function. Used to prevent unintended data rewriting, etc.
- The Soft-Lock setting and method can be selected from the following.
  When used in combination with the intelligent input terminal, assign "Soft-Lock [SFT]" to any of "Input terminal function " ([C001] to [C007]).

| Code | Item | Description | [SFT] terminal | Data |
|---|---|---|---|---|
| [b031] | Soft-Lock selection | Only [b031] can be changed. | ON | 00 |
| | | Soft-Lock function disabled (normal operation) | OFF | |
| | | Only [b031] and frequency settings ([F001], [A020], [A220], [A021] to [A035], [A038]) can be changed. | ON | 01 |
| | | Soft-Lock function disabled (normal operation) | OFF | |
| | | Only [b031] can be changed. | - | 02 |
| | | Only [b031] and frequency settings ([F001], [A020], [A220], [A021] to [A035], [A038]) can be changed. | - | 03 |
| [C001] to [C007] | Input terminal function | Soft-Lock [SFT]: Used in case enable the Soft-Lock function by the input terminal. | | 15 |

!
- Setting of "Soft-Lock selection [b031]" can be password-protected. For details, see "7.2.4 Protecting data with passwords".
- If the parameter is write-protected by the Soft-Lock function, batch writing (Write) of the parameter by the remote operator (WOP) with the data R/W function is not possible. (Parameter batch read is possible.)

## 7.2.4 Protecting Data with Passwords

**Q**

- How to protect the parameters displayed on the keypad with a password so that they cannot be changed without permission?
- How to protect the set parameters with a password so that they cannot be changed without permission?

**A**

- The password function protects the settings of "Display restriction selection [b037]" and "Soft-Lock selection [b031]". Prevents the display and setting of parameters from being changed without permission.

**!**

- If you forget the set password, there is no way to unlock the password. Also, our factory and distributors will not be able to investigate the password, so please be very careful when setting the password.

| Code | Item | Description | Data |
|---|---|---|---|
| [b190] | Password setting for display restriction selection [b037] | Password disabled*1 | 0000 |
| | | Set password A for "Display restriction selection [b037]".*2 | 0001 to FFFF |
| [b191] | Password authentication for display restriction selection [b037] | Parameter for authentication of password A. | 0000 to FFFF |
| [b192] | Password setting for Soft-Lock selection [b031] | Password disabled*1 | 0000 |
| | | Set password B for "Soft-Lock selection [b031]".*2 | 0001 to FFFF |
| [b193] | Password authentication for Soft-Lock selection [b031] | Parameter for authentication of password B. | 0000 to FFFF |

*1. The password cannot be set to 0000.
*2. The characters that can be set in the password are 0 to 9 and A, b, C, d, E, F (hexadecimal).

### ■ Outline of the password function (example of setting password A for "Display restriction selection [b037]")

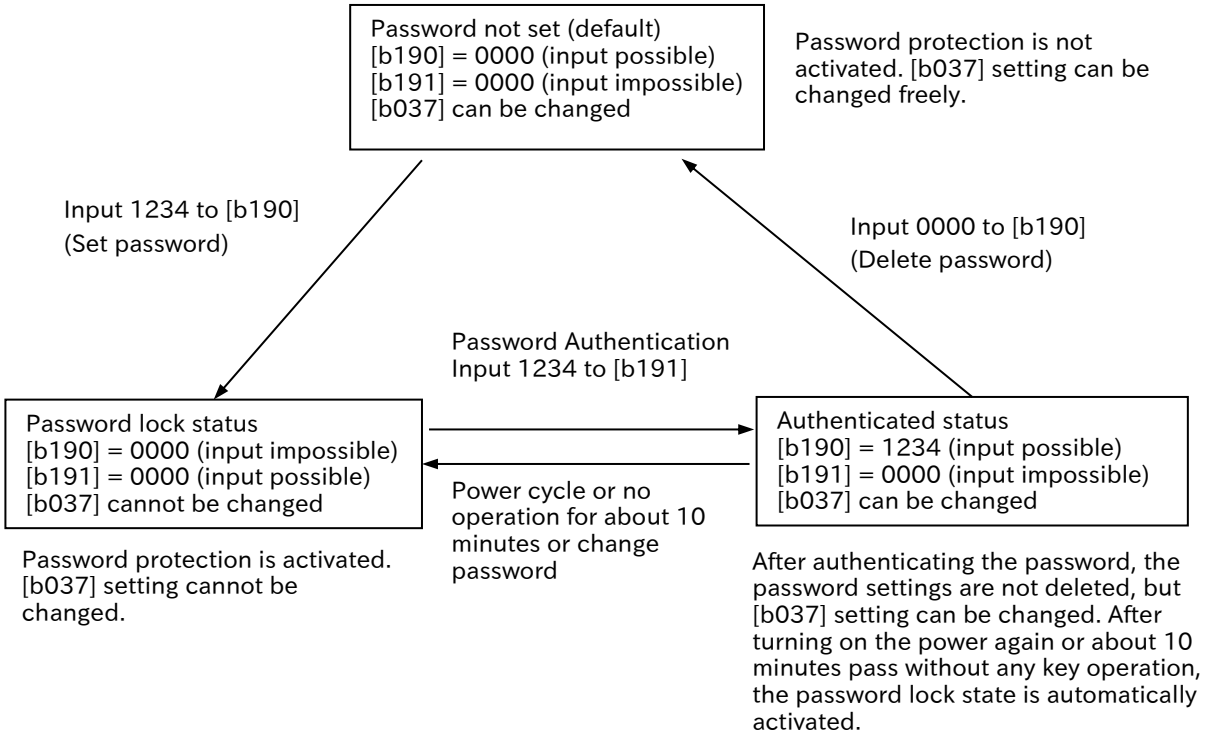

## Setting a password

(1) Set "Soft-Lock selection [b031]" and "Display restriction selection [b037]" according to the content to be protected.
(2) Enter any password in the password setting parameter ([b190]/[b192]).
(Note that 0000 cannot be used.)

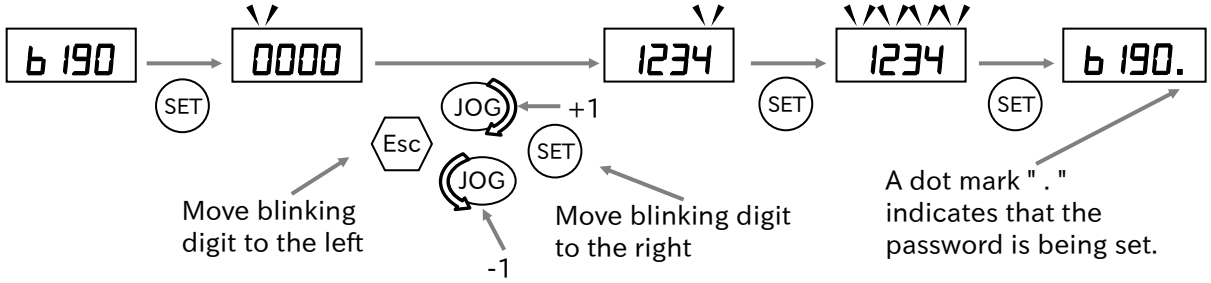


(3) The password lock has been activated. [b031]/[b037] cannot be changed.

## Authenticating a password (When the person who knows the password changes the data of [b031]/[b037])

(1) Enter the password in the password authentication parameter ([b191]/[b193]).

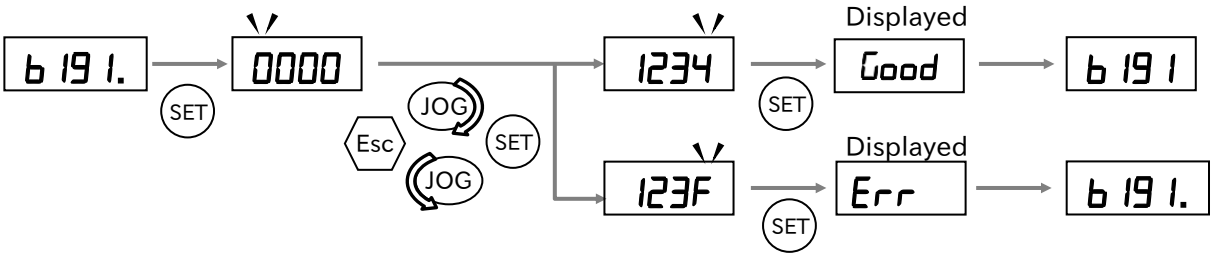


(2) If the password is correct, "Good" is displayed and [b031]/[b037] can be changed. If the password is incorrect, "Err" is displayed and the inverter returns to the original state (password lock state). After turning on the power again or about 10 minutes pass without any key operation, the password lock state is automatically activated.

## Changing password

(1) Authenticate the password.
(The password cannot be changed in the password lock state ("0000" is displayed)).
(2) Enter a different password in the password setting parameter ([b190]/[b192]).

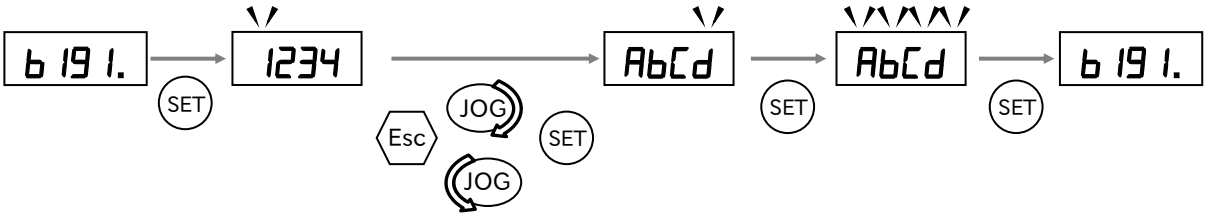


(3) When the password is changed, the inverter automatically enters the password lock state.

## Deleting a password

(1) Authenticate the password.
(Password cannot be deleted in the password lock state ("0000" is displayed)).
(2) Enter 0000 in the password setting parameter ([b190]/[b192]).
(3) The inverter will return to the default state without a password and all password information will be cleared.

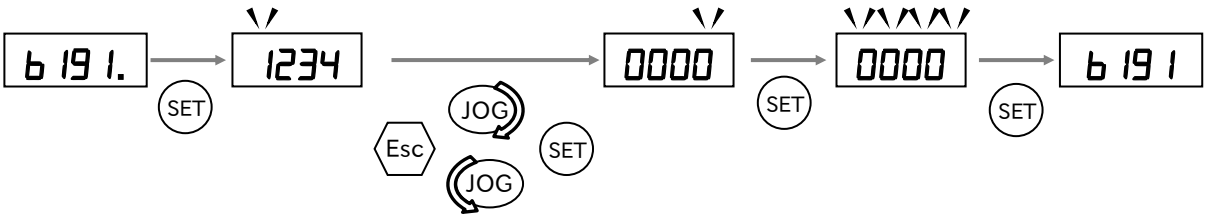

## 7.2.5 Setting the Initial Keypad Display

Q

- How to make the keypad display the specified monitor or parameter every time at power-on?
- How to display the specified parameters automatically if the keypad has not been operated for a few minutes?

A

- By the "Initial display selection [b038]", the display of keypad at power-on can be selected from the following contents. (The default setting is 001 (Output frequency monitor [d001]).)
- If "Enable auto-return to the initial display [b164]" is set to "Enable (01)" and keypad has not been operated for 10 minutes, the display automatically changes to the display set in "Initial display selection [b038]".

| Code | Item | Description | Data |
|---|---|---|---|
| [b038] | Initial display selection (Display at power-on)*1 | The last set parameter (including when the SET key is pressed in the data display of [d ***]). In case of [d ***], the data part is displayed. Otherwise, the parameter code is displayed. | 000 |
| | | [d001] to [d060] can be set (001: Initial value) | 001 to 060 |
| | | [F001] | 201 |
| | | In case of connecting WOP, the initial display on the WOP becomes monitor mode B.<br>In case of keypad of WJ-C1 or connecting another remote operator (OPE-SR/OPE-SBK/OPE-SR mini), the initial display is the same as when "000" is selected. | 202 |
| [b164] | Enable auto-return to the initial display | Disabled (not automatic transition) | 00 |
| | | Enabled (automatic transition) | 01 |

*1. When "000" or "202" is set in [b038] and the power is turned off without changing other parameters, [b038] is displayed at the next power-on.

## 7.2.6 Automatic Registration of Changed Parameter History

Q

- How to know the parameters that have been changed from the default setting?

A

- When "User-parameter automatic setting function enable [b039]" is set to "Enable (01)", the parameters changed from the default are automatically stored in "User-parameter 1 to 32 selection ([U001] to [U032])" in order. It can also be used as a change history.
- Parameters are stored at the timing when the SET key is pressed. [U001] is the newest changed parameter and [U032] is the oldest changed parameter.
- If the same parameter is changed, the old memory is erased and new change is stored. If the number of parameters exceeds 32,the oldest memory in [U032] is deleted.

| Code | Item | Description | Data |
|---|---|---|---|
| [b039] | User-parameter automatic setting function enable | Disable | 00 |
| | | Enable | 01 |

!

- Note that when [b039] is changed from "Disable (00)" to "Enable (01)", all parameters registered in "User-parameter 1 to 32 selection ([U001] to [U032])" until then are initialized ("no" setting).

## 7.2.7 Display Lock [DISP] Function

Q

- How to prevent the display of keypad from changing by someone?

A

- When "Display Lock [DISP]" is assigned to any of the "Input terminal function [C001] to [C007]" and the terminal is turned on, the operator's display becomes the display set in the "Initial display selection [b038]" and other parameters cannot be displayed.

| Code | Item | Description | Data |
|---|---|---|---|
| [C001] to [C007] | Input terminal function | Display Lock [DISP]:<br>Fixes Keypad display to the display set in "Initial display selection [b038]". | 86 |

## 7.2.8 Remote Operator Functions

**Q**

- How to set the display of the main unit keypad when connecting a remote operator?
- How to specify the behavior of the inverter such as tripping or operation continuation at the disconnection of the remote operator?

**A**

- When the optional remote operator (OPE-SR/OPE-SBK/OPE-SR mini/WOP) is connected, key operation of the keypad is invalid. At this time, the monitor data set to "Display while ext. operator connected [b150]" is displayed on the main unit display.
- When disconnection with the remote operator is detected (communication with the operator is interrupted for more than 5 seconds), the inverter operation follows the setting of "Action selection at ex. operator disconnection [b165]".
- Parameter batch read/write by WOP can be enabled or disabled by "Data R/W selection [b166]".
- When the remote operator is connected, press and hold the Esc key on the main unit keypad (for about 3 seconds) to switch to the operation on the main unit. Press and hold the Esc key again to return to the remote operator operation.

| Code | Item | Description | Data |
|---|---|---|---|
| [b150] | Display while ext. operator connected | Set the display of the main unit when the remote operator is connected. Monitor parameter [d001] to [d060] can be set. | 001 to 060 |
| [b165] | Action selection at ex. operator disconnection | Issue trip [E40.x] | 00 |
| | | Issue trip [E40.x] after deceleration stop | 01 |
| | | Ignore | 02 |
| | | Free run stop | 03 |
| | | Deceleration stop | 04 |
| [b166] | Data R/W selection | Enable R/W | 00 |
| | | Disable R/W | 01 |

**!**

- Even if data R/W selection [b166] is set to "Enable R/W (00)", parameter batch write is not possible when Soft-Lock is activated (parameter batch read is enabled). For details on the Soft-Lock function, see "7.2.3 Prohibit Parameter Changes".

### Differences between the main unit keypad and the remote operator (OPE-SR/-SBK, OPE-SR mini)

- When a remote operator (OPE-SR, OPE-SBK, OPE-SR mini) is connected to WJ-C1, note that the operation key names differ as shown in the table below.

| WJ-C1 main unit keypad | Remote operator (OPE-SR,OPE-SBK,OPE-SR mini) |
|---|---|
| 5 digits on the display and the negative LED is lit for the negative value. | 4 digits on the display and the most significant digit is displayed as "-" for the negative value. |
| SET key | STR key |
| Esc key | FUNC key |
| JOG dial: Up by clockwise rotation | △: Up key |
| JOG dial: Down by counterclockwise rotation | ▽: Down key |

### Example of OPE-SR mini

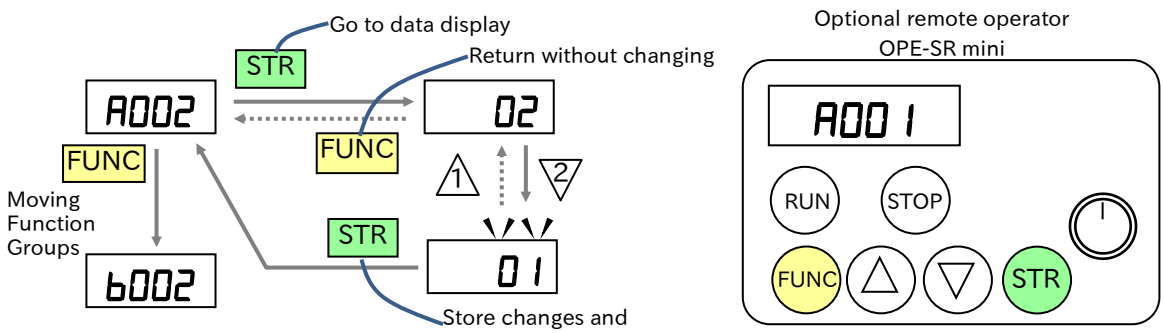

8

# Chapter 8 Mandatory Setting for Motor Drive and Test Run

This chapter describes the mandatory settings, procedures for setting and test run to operate the motor and inverter. Before actual operation, be sure to perform the settings described in this chapter and perform the test run. For details of the installation, wiring, and the various functions of the inverter, refer to the corresponding chapters.
Before conducting a test run, please read "Chapter 1 Safety Instructions/Risks" carefully and pay attention to safety.

**8.1 Mandatory Setting for Operation ..... 8-1-1**
8.1.1 Overview of Mandatory Setting Items ..... 8-1-1
8.1.2 Changing the Load Rating of the Inverter ..... 8-1-2
8.1.3 Setting the Motor Specification Label Data to Parameters ..... 8-1-5
8.1.4 Setting Electronic Thermal for the Motor ..... 8-1-7
8.1.5 Setting Motor Constant ..... 8-1-13
8.1.6 Changing the Operation Mode of the Inverter ..... 8-1-15
**8.2 Test Run ..... 8-2-1**
8.2.1 Test Run by Connecting Only the Motor ..... 8-2-1
8.2.2 Perform a Test Run with a Machine Load ..... 8-2-5
**8.3 Carrying Out Motor Auto-tuning ..... 8-3-1**
8.3.1 Procedure for Auto-tuning of an Induction Motor ..... 8-3-1

# 8.1 Mandatory Setting for Operation

## 8.1.1 Overview of Mandatory Setting Items

Q

- What are the essential parameters to operate the motor and inverter?

A

- This chapter describes the parameter settings and procedures required to drive the motor and inverter correctly.
- It also describes the electronic thermal function for protecting the motor.

!

- Follow the sections in the table below to set the parameters appropriately before starting test run and adjustment.

| Item | Description |
|---|---|
| "8.1.2 Changing the Load Rating of the Inverter" | Set the load rating according to the application.<br>Select from normal duty mode suitable for elevators, conveyors, etc. and Light duty mode suitable for fans, pumps, etc. |
| "8.1.3 Setting the Motor Specification Label Data to Parameters" | Set the driven motor specification to the inverter.<br>Set the base frequency, maximum frequency, motor capacity, number of motor poles, motor rated voltage, motor rated current, etc. before starting operation. |
| "8.1.4 Setting Electronic Thermal for the Motor" | The electronic thermal function is used to protect the motor from burnout. Be sure to set it according to the motor to be used. |
| "8.1.5 Setting Motor Constant" | When automatic torque boost/sensorless vector control is used, the motor constant must be set.<br>If the motor constant is unknown, obtain it from the motor manufacturer or measure the motor constant by referring to "8.3 Carrying Out Motor Auto-tuning". |
| "8.2 Test Run" | In order to confirm that the inverter and motor operate properly, conduct test runs with the motor alone and with the actual load.<br>When using automatic torque boost or sensorless vector control, set the motor constant referring to "8.1.5 Setting Motor Constant" or "8.3 Carrying Out Motor Auto-tuning". |
| "8.3 Carrying Out Motor Auto-tuning" | This section explains how to perform auto-tuning. When using a motor other than Hitachi's standard or an unknown motor, measure the motor constant using the auto-tuning function. |

## 8.1.2 Changing the Load Rating of the Inverter

**Q**

- How to change to the load rating mode considered at the time of inverter selection?
- How to use the lower capacity inverter against the motor for light load applications such as fans and pumps?

**A**

- The load rating mode of the inverter can be selected from the normal duty rating (ND) and the Light duty rating (LD).
- The rated current, overload current rating, temperature rating, etc. of the inverter differ depending on the load rating mode. Select either one according to the load used.

### Features of normal duty/Light duty rating

| Item | Normal duty rating | Light duty rating |
|---|---|---|
| Features | Suitable for loads requiring high torque at start, acceleration/deceleration, etc. | Suitable for loads with less drive than rated torque, etc. One size bigger motor may be able to be driven. |
| Application example | Elevators, cranes, conveyors, etc. | Fans, pumps, air conditioners, etc. |
| Rated output current (example) | 3.0 A (3-phase 200 V, 0.4 kW inverter) | 3.5 A (3-phase 200 V, 0.4 kW inverter) |
| Overload current rating | 150%/1 minute, 200%/3 seconds | 120%/1 minute, 150%/0.5 seconds |

**!**

- The load rating mode is set in "Load type selection [b049]." Changing the [b049] and pressing the SET key will immediately change the mode. As shown in the table below, the setting range and the initial value of some parameters will be changed. Note that the setting values at that time will also be initialized or changed.

| Code | Item | Description | Data |
|---|---|---|---|
| [b049] | Load type selection | Normal duty rating (ND mode) | 00 |
| | | Light duty rating (LD mode) | 01 |

### List of parameters changed when switching to normal duty rating

| Code | Item | Data | Default value after initialization | Setting at switching to ND |
|---|---|---|---|---|
| [A044]*1 | Control mode selection | 00(V/f constant torque)/ 01(V/f reduction torque)/ 02(Free-V/f)/ 03(sensorless vector) | 00 | No change |
| [A054] | DC braking force | 0 to 100 (%) | 50 (%) | |
| [A057] | DC braking force at start | | 0 (%) | |
| [b012]*1 | Electronic thermal level | (0.20 to 1.00) × ND rated current (A) | ND rated current (A) | Converted value |
| [b016]/ [b018]/ [b020] | Free electronic thermal current-1 to 3 | (0.00 to 1.00) × ND rated current (A) | 0.00 (A) | Converted value |
| [b022]*1 | Overload restriction 1 active level | (0.20 to 2.00) × ND rated current (A) | 1.5 × ND rated current (A) | Converted value |
| [b025] | Overload restriction 2 active level | | | |
| [b028] | Active frequency matching restart level | | ND rated current (A) | |
| [b083] | Carrier frequency | 2.0 to 15.0 (kHz) | 2.0 (kHz) [Pattern 0] 10.0 (kHz) [Pattern 1] 2.0 (kHz) [Pattern 3] | No change |
| [C030] | [Ao2] Output reference value (at digital output current monitor) | (0.20 to 2.00) × ND rated current (A) | ND rated current (A) | Converted value |
| [C039] | Low current detection level | | | |
| [C041]*1 | Overload warning level | 0.00: Function disabled (0.01 to 2.00) × ND rated current (A) | 1.15 × ND rated current (A) | |
| [C111] | Overload warning level 2 | | | |
| [H003]*1 | Async. Motor capacity | 0.1 to 18.5 (kW) | Same capacity as the model | No change |

*1. "2nd-motor control [SET]" target parameter.

## List of parameters changed when switching to Light duty rating

| Code | Item | Data | Default value after initialization | Setting at switching to LD |
|---|---|---|---|---|
| [A044]*1 | Control mode selection | 00(V/f constant torque)/<br>01(V/f reduction torque)/<br>02(Free-V/f)/<br>03(sensorless vector) | 00 | 00 |
| [A054] | DC braking force | 0 to 70 (%) | 50 (%) | 50 (%) |
| [A057] | DC braking force at start | | 0 (%) | 0 (%) |
| [b012]*1 | Electronic thermal level | (0.20 to 1.00) × LD rated current (A) | LD rated current (A) | Converted value |
| [b016]/<br>[b018]/<br>[b020] | Free electronic thermal current-1 to 3 | (0.00 to 1.00) × LD rated current (A) | 0.00A | Converted value |
| [b022]*1 | Overload restriction 1 active level | (0.20 to 1.50) × LD rated current (A) | 1.2 × LD rated current (A) | Initial value of Light duty |
| [b025] | Overload restriction 2 active level | | | |
| [b028] | Active frequency matching restart level | | LD rated current (A) | |
| [b083] | Carrier frequency | 2.0 to 10.0 (kHz) | 2.0 (kHz) [Pattern 0]<br>10.0 (kHz) [Pattern 1]<br>2.0 (kHz) [Pattern 3] | 2.0 (kHz) |
| [C030] | [Ao2] Output reference value (at digital output current monitor) | (0.20 to 2.00) × LD rated current (A) | LD rated current (A) | Converted value |
| [C039] | Low current detection level | | | |
| [C041]*1 | Overload warning level | 0.00: Function disabled<br>(0.01 to 2.00) × LD rated current (A) | 1.15 × LD rated current (A) | |
| [C111] | Overload warning level 2 | | | |
| [H003]*1 | Async. Motor capacity | 0.1 to 18.5 (kW) | One size bigger than the model capacity | No change |

*1. 2nd-motor control [SET] target parameter.

- The "Converted value" parameter converts the current setting value at the rated current ratio of ND and LD.
  (e.g.) When ND rated current = 8.0 A/LD rated current = 10.0 A, if the setting 4.0 A at ND mode is changed to LD mode, it will be converted as follows.
  (10/8) × 4.0 A = 5.0 A
  (In the case of conversion from LD to ND, it is converted by the inverse ratio shown above.)

- When the load rating mode is changed, it may be necessary to set the parameters again. Refer to the above table and recheck each parameter. Also recheck the parameters related to heat generation and cooling of the inverter, such as parameters related to torque and current setting, automatic carrier reduction function, and cooling fan control method selection.
- The inverter mode monitor [d060] can be used to check which operation mode is currently selected.

- The following parameters and I/O terminal functions cannot be selected for Light duty mode.

## Non-display parameters for Light duty mode

| Code | Parameter name | Code | Parameter name |
|---|---|---|---|
| [d009] | Torque reference monitor | [H005]*1 | Async. Motor speed response |
| [d010] | Torque bias monitor | [H020]*1 | Async. Motor constant R1 |
| [d012] | Output torque monitor | [H021]*1 | Async. Motor constant R2 |
| [b040] | Torque limit selection | [H022]*1 | Async. Motor constant L |
| [b041] | Torque limit 1 (Forward drive) | [H023]*1 | Motor constant I0 |
| [b042] | Torque limit 2 (Reverse regenerative) | [H024]*1 | Async. Motor constant J |
| [b043] | Torque limit 3 (Reverse drive) | [H030]*1 | Async. Motor constant R1 (Auto-tuning data) |
| [b044] | Torque limit 4 (Forward regenerative) | [H031]*1 | Async. Motor constant R2 (Auto-tuning data) |
| [b045] | Torque limit LADSTOP selection | [H032]*1 | Async. Motor constant L (Auto-tuning data) |
| [b046] | Direction reversal protection selection | [H033]*1 | Async. Motor constant I0 (Auto-tuning data) |
| [C054] | Over/ Under-torque selection | [H034]*1 | Async. Motor constant J (Auto-tuning data) |
| [C055] | Over/ Under-torque level (Forward drive) | [P033] | Torque reference input source selection |
| [C056] | Over/ Under-torque level (Reverse regenerative) | [P034] | Torque reference |
| [C057] | Over/ Under-torque level (Reverse drive) | [P036] | Torque bias input source selection |
| [C058] | Over/ Under-torque level (Forward regenerative) | [P037] | Torque bias value |
| [C059] | Over/ Under-torque output signal mode selection | [P038] | Torque bias polarity selection |
| [H001] | Auto-tuning selection | [P039] | Speed limit at torque control (at Forward rotation) |
| [H002]*1 | Async. Motor constant selection | [P040] | Speed limit at torque control (at Reverse rotation) |

*1. "2nd-motor control [SET]" target parameter.

## Not selectable I/O terminal function at Light duty mode

| Input terminal function | | Output terminal function | |
|---|---|---|---|
| 40: TL | Torque limit enable | 07: OTQ | Over-torque/under-torque |
| 41: TRQ1 | Torque limit selection bit 1 | 10: TRQ | Torque limited |
| 42: TRQ2 | Torque limit selection bit 2 | - | - |
| 52:ATR | Permission of torque control | - | - |

## 8.1.3 Setting the Motor Specification Label Data to Parameters

**Q**

- How to set parameters according to the motor?
- How to solve the unstable drive of the motor?

**A**

- To control and protect the motor, set the basic parameters of the motor shown in the table Tbelow.
- Set the motor capacity/number of motor poles/motor rated voltage/base frequency (motor rated frequency) according to the specifications of the motor (value indicated on the motor specification label). For the maximum frequency setting, set the highest frequency required. However, set it so that it does not exceed the specifications for the maximum rotation speed of the motor.

### For induction motor

| Code | Item | Description | Data |
|---|---|---|---|
| [A003]*1 | Base frequency | Sets the base frequency of the motor. | 30.0 to Maximum frequency (Hz) |
| [A004]*1 | Maximum frequency | Sets the maximum frequency of the motor. | Base frequency to 590.0 (Hz) |
| [A045]*1 | Output voltage gain | [A082] × [A045] is the output voltage of the inverter. | 20 to 100 (%) |
| [A082]*1 | Motor rated voltage | Sets the rated voltage of the motor. | 200 V class:<br>200/215/220/230/240<br>400 V class:<br>380/400/415/440/460/480 |
| [H003]*1 | Async. Motor capacity | Sets the capacity of the motor. | 0.1 to 18.5 (kW) |
| [H004]*1 | Async. Motor number of poles | Sets the number of motor poles. | 2 to 48 (pole) |

**Note**
**Burnout**

**DO**

- Note that if the base frequency is set to less than the rated frequency of the motor, the motor may burn out. (less than 50/60 Hz for standard induction motors.)
- Do not set the maximum frequency and motor rated voltage beyond the motor specifications. Otherwise, motor burnout may result.
- If invereter is initialized, set the basic parameters of the motor again. Continued use without setting after initialization may cause the motor to burn out.
- When setting the maximum frequency more than 60 Hz, check with the motor manufacturer for the maximum allowable frequency.

*1. "2nd-motor control [SET]" target parameter. The second control parameter is also subject to setting.

## Motor Capacity and Number of Poles

- For induction motors, if "Async. Motor capacity [H003][*1]" or "Async. Motor number of poles [H004][*1]" is changed, the motor constant parameter setting values will be written to the motor constants of the Hitachi standard motor stored in advance. Accurate setting of capacity and number of poles may prevent the motor from being disturbed, or stabilize the motor drive. (The motor constant parameters here indicate the motor constant parameters when the "Async. Motor constant selection [H002][*1]" setting is "Hitachi Standard (00)". Refer to "8.1.5 Setting Motor Constant" for more information.)
- When the control method is V/f control (constant torque characteristics (VC), reduced torque characteristics, and free V/f characteristics) and multiple motors are driven by a single inverter, set a value close to the total motor capacity to the motor capacity.
- Refer to "8.3.1 Procedure for Auto-tuning of an Induction Motor" for motor constant settings.

## Relationship between frequency and voltage in general V/f control

- When the base frequency and rated voltage are set, the voltage output in general V/f control is as shown in the figure on the right.
- The output voltage from the base frequency to the maximum frequency reaches the motor rated voltage at the maximum. The maximum frequency setting value is set by the maximum value of the analog external input (e.g. 10 VDC from 0 to 10 VDC).
- When an induction motor is used with more than 60 Hz of base frequency, it is a special motor. For this reason, the maximum applicable motor of the inverter may differ and it may be necessary to use bigger capacity inverter.

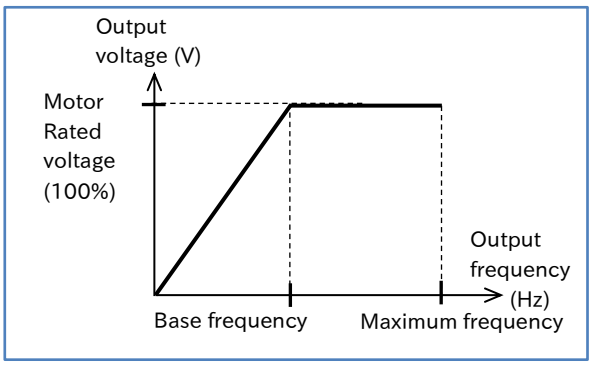


- If there is no selection in the "Async. Motor rated voltage [A082] [*1]" that matches the motor rated voltage, set the closest and higher value. For induction motors, set the "Output voltage gain [A045][*1]" by referring the equation below.

  Output voltage gain [A045][*1] = 100% × Motor Rated Voltage / Async. Motor rated voltage [A082][*1]

## Automatic voltage regulation function (AVR function)

- The inverter automatically operates the automatic voltage regulation function (AVR function). This function outputs voltage to the motor correctly even with variation in the input voltage to the inverter.
- Even if this function is used, a voltage exceeding the input voltage cannot be output.
- For the output voltage to the motor, see "9.9.4 Suppressing Overvoltage by Controlling Output Voltage".

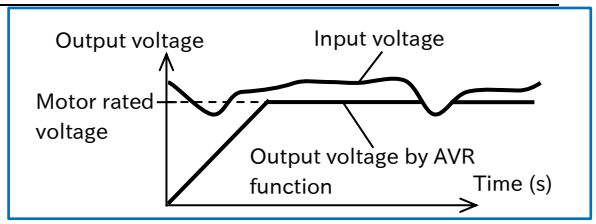


## Output current

- If the motor rated current is set above the inverter rated current, the desired characteristics may not be satisfied. In addition, the inverter protection may be applied first.

*1. "2nd-motor control [SET]" target parameter. The second control parameter is also subject to setting.

## 8.1.4 Setting Electronic Thermal for the Motor

**Q**

- How to set the thermal protection of the motor?
- How to change the motor thermal protection level according to the rated current?
- How to provide protection considering the cooling characteristics of the motor at low speed with a self-cooled motor, etc.?
- How to freely change the thermal protection characteristics pattern?
- How to set the heat dissipation characteristics according to the motor?
- How to continue motor protection by accumulating the load ratio even when restarting after power-off?
- How to know the accumulated status of electronic thermal?

**A**

### Basic characteristics of electronic thermal

- The electronic thermal function protects the motor from overheating based on the output current, output frequency and electronic thermal characteristics. By setting the "Electronic thermal level [b012][*1]" according to the motor rated current, protection is applied if a current exceeding the rated current continues to flow to the motor. If you want to apply protection earlier, set it lower than the motor rated current.
- The basic characteristics (time-limited characteristics) of the electronic thermal changes with the setting of "Load type selection [b049]". Each basic characteristics (time-limited characteristic) is shown in the figure below.
- By setting "Electronic thermal characteristic selection [b013][*1]", it is possible to set the characteristics (reduction ratio according to operating frequency) according to the motor to be used. For details, refer to the following pages.
- If the motor current becomes unstable due to disturbance, etc., the motor may trip earlier than the specified time.

- According to the setting of "Electronic thermal subtraction function selection [b910]", the mode in which the motor/inverter common electronic thermal operates and the mode in which the motor electronic thermal and the inverter electronic thermal operate independently can be selected. When "Electronic thermal subtraction function selection [b910]" ≠ 00, refer to "Changing heat dissipation characteristics of electronic thermal" in this section.

| Code | Item | Description | Data |
|---|---|---|---|
| [b012]*1 | Electronic thermal level | If a current exceeding the set value continues to flow, protection is applied and an "overload error [E05]" occurs. | (0.20 to 1.00) × Normal duty/Light duty rated current (A) |
| [b910] | Electronic thermal decrease function enable | Set the accumulated value subtraction function of the motor electronic thermal. When other than "Disable (00)" is selected, the electronic thermal for the motor and the electronic thermal for the inverter operate independently. | 00 (Disable)/<br>01 (Enable: fixed subtraction rate)/<br>02 (Enable: [b911] subtraction rate)/<br>03 (Enable: [b912] time constant subtraction) |

| Electron thermal operation mode | | Time-limited characteristic | Electronic thermal level | Thermal characteristics | Trip |
|---|---|---|---|---|---|
| [b910] = 00 | Common electronic thermal for motor and inverter | Separate characteristics for normal duty/Light duty | [b012]*1 | Select by [b013]*1 | E05 |
| [b910] ≠ 00 | Electronic thermal for motor | Characteristics based on normal duty | Calculate the accumulated load ratio from [b012]*1 and [b913]. | Select by [b013]*1 | E05 |
| | Electronic thermal for inverter | Separate characteristics for normal duty/Light duty | Rated output current of the inverter in normal duty/ Light duty | Constant torque characteristics | E38 |

● Thermal characteristics at normal duty

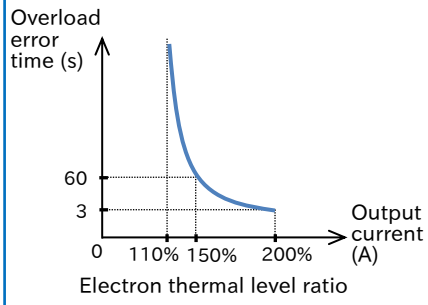


● Thermal characteristics at Light duty

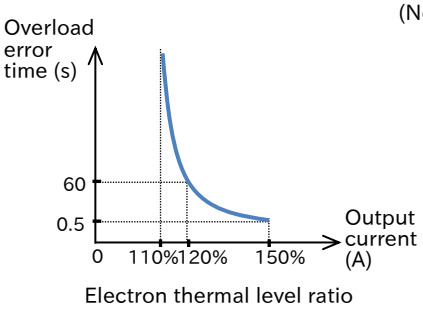


(Note) The electronic thermal time limit characteristics change as shown in the figure on the left in normal duty/Light dutymode setting.

・Overload rated current:
Normal duty : 150%/1 min, 200%/3 sec.
Light duty : 120%/1 min, 150%/0.5 sec.

*1. "2nd-motor control [SET]" target parameter. The second control parameter is also subject to setting.

- This setting is necessary for motor protection. Set the correct value.
- Even if [b012] is set to a large value, if the current grows steeply, "Overcurrent error [E01] to [E04]" may occur before "Overload error [E05]".
- Even in the case of motor/inverter common electronic thermal, "low-speed area overload protection [E38]" occurs when overload occurs in the extremely low-speed range of 0.2 Hz or less. Refer to "Chapter 15 Tips/FAQ/Troubleshooting" for the countermeasures to [E05]/[E38].
- Trip reset is not accepted for about 10 seconds after [E05]/[E38] occur.

## A Change the electronic thermal characteristics

- By setting "Electronic thermal characteristic selection [b013]", it is possible to set the electronic thermal characteristic for motor/inverter common or motor according to the motor to be used. It is possible to set the protective characteristic considering the cooling capability drop of the motor at low speed.

| Code | Item | Description | Data |
|---|---|---|---|
| [b013]*1 | Electronic thermal characteristics selection | Reduced torque characteristics:<br>This pattern corresponds to the deterioration of the motor's cooling capability at the low speed range. | 00 |
| | | Constant torque characteristics:<br>This pattern corresponds to constant torque output. | 01 |
| | | Free setting:<br>The pattern can be freely set the electronic thermal characteristics according to the characteristics of the motor. | 02 |

*1. "2nd-motor control [SET]" target parameter. The second control parameter is also subject to setting.

### Reduced torque characteristic

- By setting "Electronic thermal characteristic selection [b013]" to "Reduced torque (00)", it is possible to set the protective characteristic considering the cooling capability drop of the motor at low speed.
- The general-purpose motor (self-cooling motor) must be used with a reduced load (current) because the cooling capability of the self-cooling fan decreases when the motor speed decreases. (When the frequency decreases, the reduction ratio also decreases, and the thermal level (current) also decreases.)
- The reduced torque characteristics are based on the heat generated by the self-cooling motor.
- The following figure (Example 1) shows an example of reduced torque characteristics when "Electronic thermal level [b012]" is set to 9.6 A at Light duty rating.
  Since the reduction rate is 1.0 when the base frequency is 60 Hz, a trip occurs after 11.5 A (120% of 9.6 A) flows continuously for 60 seconds. Since the reduction rate is 0.8 when running at 20 Hz, a trip occurs after 9.2 A (9.6 A × 120% × 0.8) flows continuously for 60 seconds.

(Example 1) Reduced torque characteristics: 3-phase 200 V, 1. 5 kW, Light duty, Electronic thermal level [b012] = 9.6 A

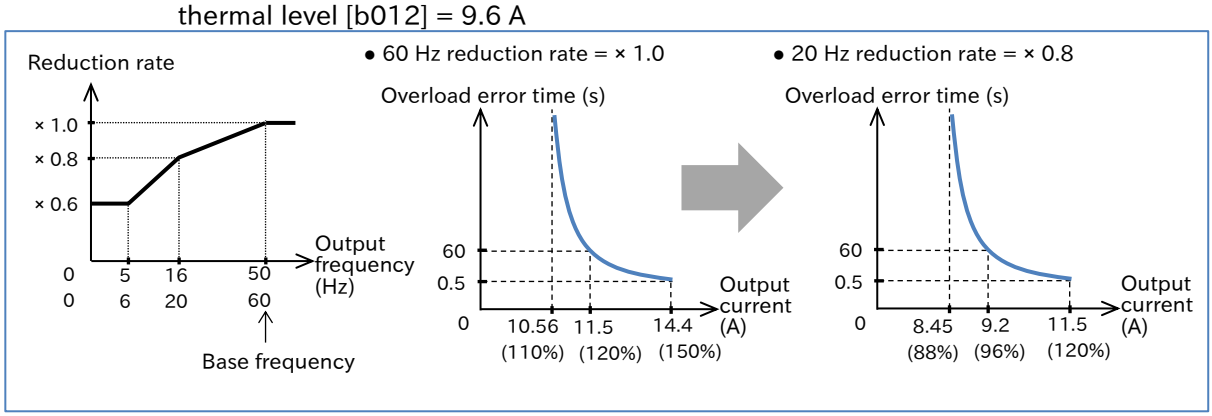

## Constant torque characteristics

- Use this setting when using a constant torque motor.

(Example 2) Constant torque characteristics: 3-phase 200 V, 1.5 kW, Normal duty, Electronic thermal level = 8.0 A

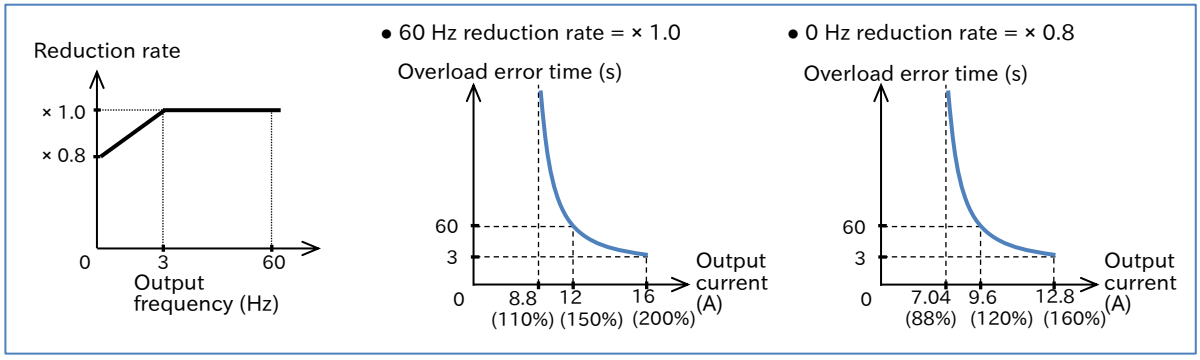


- If "Electronic thermal decrease function enable [b910]" ≠ 00, the electronic thermal for the motor and the electronic thermal for the inverter operate independently. Regardless of the "Electronic thermal level [b012]", the electronic thermal for the inverter operates according to the constant torque characteristics based on the inverter output current of normal duty/Light duty rating as shown in the above figure.
- For protection of the inverter main unit, the reduction rate is applied as shown in the figure above in the low-speed range of 3 Hz or less.
- When using a self-cooling motor whose cooling capability is decreased in the low speed range, take care of the heat generation of the motor. Depending on the heat generation characteristics of the motor, use the reduced torque characteristics or free setting.

## Free electronic thermal characteristics

- The electronic thermal characteristics (reduction rate characteristics) can be freely set to protect the motor according to the load.

| Code | Item | Description | Data |
|---|---|---|---|
| [b015] | Free electronic thermal frequency-1 | Set the frequency at each segmental point. | 0 to [b017] (Hz) |
| [b017] | Free electronic thermal frequency-2 | | [b015] to [b019] (Hz) |
| [b019] | Free electronic thermal frequency-3 | | [b019] to 590.0(Hz) |
| [b016]<br>[b018]<br>[b020] | Free electronic thermal current 1/2/3 | Set the current value at each segmental point. | (0.00 to 1.00) × Normal duty/Light duty rated current (A) |

(Example 3) Electronic thermal free setting: 3-phase 200 V, 1.5 kW, Normal duty, Electronic thermal level [b012] = 8.0 (A)

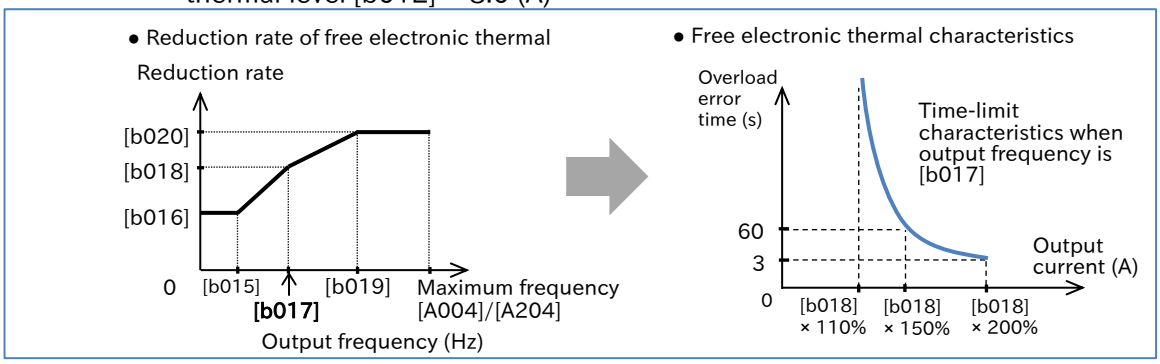


- In case that "Electronic thermal characteristic selection [b013]" is set to "Free setting (02)" with [b016]/[b018]/[b020] set to the default 0.0 A, [E05] occurs immediately after inverter running.
- Set the frequency setting of free electronic thermal in the order of [b019], [b017], and [b015].

A

- Changing the heat dissipation characteristics of electronic thermal
- When "Electronic thermal decrease function enable [b910]" is set to other than "Disable (00)", the electronic thermal for motor and the electronic thermal for inverter operate independently.
- When the output current is less than 110% of the electronic thermal level (when the reduction rate is × 1.0), the electronic thermal load ratio for the motor is subtracted.
- The subtraction characteristics can be set in "Electronic thermal decrease function enable [b910]". Set according to the heat dissipation characteristics of the motor.

| Code | Item | Description | Data |
|---|---|---|---|
| [b910] | Electronic thermal decrease function enable | The doubled counters are cleared every 10 minutes each. The timing of clearing is shifted by 5 minutes and is performed alternately. | 00 |
| | | Subtract at the rate that the load ratio becomes 0% from 100% in 10 minutes. | 01 |
| | | Subtract at the rate that the load ratio becomes 0% from 100% in the set time in [b911]. | 02 |
| | | Subtract the load ratio with the set time in [b912] as the time constant. | 03 |
| [b911] | Electronic thermal decreasing time | Subtraction time setting when [b910] is 02.<br>Note that if the set value is less than the default setting (600 (s)), the protection will be slow and the motor will easily burn out. | 0.10 to 100000.00 (s) |
| [b912] | Electronic thermal decreasing time constant | Subtraction time constant when [b910] is 03.<br>Note that if the set value is less than the default setting (120 (s)), the protection will be slow and the motor will easily burn out. | 0.10 to 100000.00 (s) |
| [b913] | Electronic thermal accumulation gain | The load ratio for each calculation cycle of the electronic thermal for the motor multiplied by this setting value is accumulated as the load ratio. × 1 times at default setting of 100%. Note that if the set value is less than the default setting of 100.0 (%), the protection will be slow and the motor will easily burn out. | 1.0 to 200.0 (%) |

!

- Set the subtraction rate in [b911]/[b912]. Check the thermal time constant of the motor with the motor manufacturer. Also, set a larger value with sufficient margin for the characteristics of the motor to be used.
- For [b913], adjust the value as large as possible based on [(trip time of electronic thermal time limit characteristic) / (motor overload tolerance time)] × 100% if the motor overload tolerance value is available.
- Even if the setting value of [b911]/[b912]/[b913] is equal to or greater than the default setting, if the value is not appropriate for the motor characteristic value, the motor may burn out. For these settings, set a value that is sufficiently larger than the motor characteristic value.
- If the motor characteristic value is not available, use with [b910] = 00.

### ■ When [b910] = 00

- Clears the load factor every 10 minutes. When one of the doubled counters becomes 100%, inverter trips due to " Overload error [E05]".

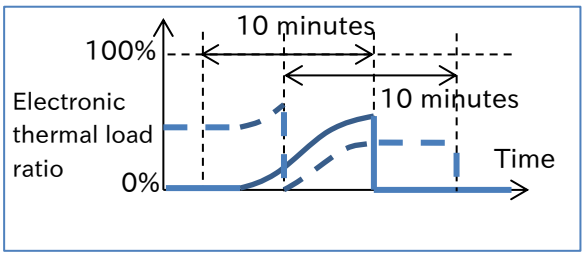


### ■ When [b910] = 01

- The electronic thermal load ratio is subtracted at the rate where the load ratio is from 100% to 0% in 10 minutes.

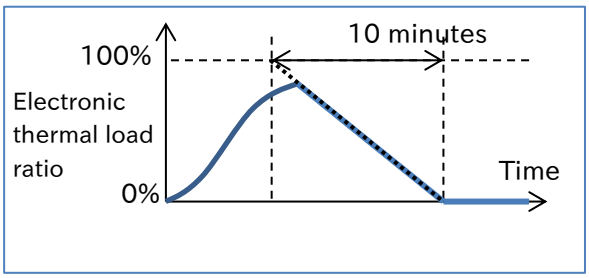


### ■ When [b910] = 02

- The electronic thermal load ratio is subtracted at the rate where the load ratio is from 100% to 0% in the set time in [b911].

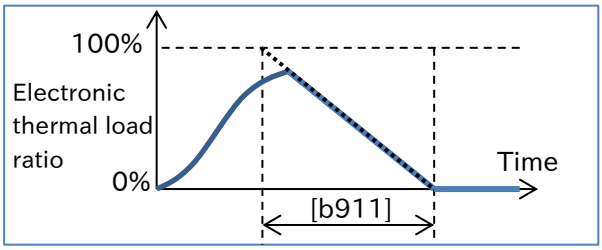


### ■ When [b910] = 03

- The electronic thermal load factor when the output current falls below the electronic thermal level is subtracted by a first-order filter with the set value of [b912] as the time constant. The load ratio becomes 0% in approximately five times of the set time in [b912].

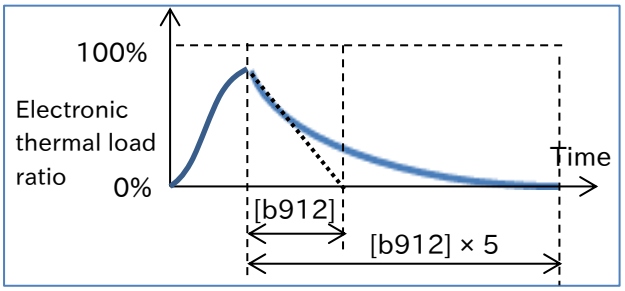


## A Saving the accumulated value of the electronic thermal even after power-off

- The accumulated value of the electronic thermal can be saved when the power is turned off, and can be read the next time the power is turned on.

| Code | Item | Description | Data |
|---|---|---|---|
| [b914] | Store electronic thermal counter at power-off | The accumulated value is set to zero when the power is turned on. | 00 |
| | | Stores the accumulated value when the power is turned off and displays it when the power is turned on. | 01 |

## A Related functions

- The electronic thermal load ratio can be checked on the "Electronic thermal load ratio monitor (Motor) [d104]".
- If want to output a warning signal when the electronic thermal load ratio exceeds a certain level, set the output terminal function "Electronic thermal alarm (Motor) [THM] (13)" and "Electronic thermal warning level (Motor) [C061]". For details, see "9.11.5 Outputting a Warning before Electronic Thermal Protection".

## 8.1.5 Setting Motor Constant

Q

- How to solve the unstable drive of the motor?
- How to use a Hitachi standard induction motor?
- How to set the motor constants required for automatic torque boost function and sensorless vector control?

A

- When the automatic torque boost function or sensorless vector control is used with an induction motor, the motor constant must be set according to the motor to be used. There are three ways to set the motor constant.

  (1) Using Hitachi standard motor.
  When using a Hitachi standard motor, set "Async. Motor constant selection [H002][*1]" to "Hitachi Standard (00)". When the IM motor capacity or the number of IM motor poles is changed, the motor constant parameters in the table below are automatically changed to Hitachi standard motor constants.

  (2) Measuring by the auto-tuning function.
  This function measures the motor constant when using a motor whose motor constant is unknown, etc. Even when using a Hitachi standard motor, it may be better to perform auto-tuning if the load inertia is large or the wiring length is long. For details, refer to "8.3 Carrying Out Motor Auto-tuning".

  (3) Setting the motor constants arbitrarily.
  Values obtained from motor manufacturers, etc. can be directly set to the parameters in the table below. Or, after (1) or (2), change the parameters in the table below for fine adjustment.
- Hitachi standard motor constant setting values in the table below are data for one phase of Y-connection motor converted to 200 V/400 V 50 Hz input.

!

- Motor constant parameters in the table below can also be adjusted and changed manually. However, note that if the motor capacity or number of motor poles is changed, it will be changed to Hitachi Standard Motor constant.
  If you have a remote operator (WOP), back up of the motor constants with Read/Write function is recommended.
- When using a motor whose motor constants are unknown, ask the motor manufacturer for the motor constants or measure the motor constants using the auto-tuning function. For details, refer to "8.3 Carrying Out Motor Auto-tuning".
- For adjustment when sufficient characteristics cannot be obtained in the case of automatic torque boost function or sensorless vector control, see "9.5.3 Using Torque Boost Function" or "9.5.7 Driving with Sensorless Vector Control".

## ■ When using a Hitachi standard induction motor

| Code | Item | Description | Data |
|---|---|---|---|
| [H002]*1 | Async. Motor constant selection | Applies Hitachi standard motor constants ([H020]*1 to [H024]*1). | 00 |
| [H020]*1 | Async. Motor constant R1 (primary resistance) | Motor constant parameter of Hitachi standard induction motor.<br>When the IM motor capacity or the number of IM motor poles is changed, it is initialized to the corresponding Hitachi standard motor constant.<br>It is also possible to adjust and change it manually. | 0.001 to 65.535 (Ω) |
| [H021]*1 | Async. Motor constant R2 (secondary resistance) | | 0.001 to 65.535 (Ω) |
| [H022]*1 | Async. Motor constant L (leakage inductance) | | 0.01 to 655.3 (mH) |
| [H023]*1 | Async. Motor constant I0 (no-load current) | | 0.01 to 655.35 (A) |
| [H024]*1 | Async. Motor constant J (moment of inertia) | | 0.001 to 9999.000 ($kgm^2$) |
| [b033] | Motor cable length code selection | Parameter that corrects the current detection accuracy due to difference in motor cable length. If the motor constant cannot be measured correctly, set higher value. | 5 to 20 |

*1. "2nd-motor control [SET]" target parameter. The second control parameter is also subject to setting.

- The base (maximum) frequency is obtained from the rated speed of the motor ($min^{-1}$) and the number of poles as follows.

$$\text{Base (maximum) frequency (Hz)} = \frac{\text{Rated speed } (min^{-1}) \times \text{Number of poles (poles)}}{120}$$

## 8.1.6 Changing the Operation Mode of the Inverter

Q

- How to switch the type of the motor to be controlled?

A

- Induction motor and synchronous motor (SM)/permanent magnet motor (PMM) can be selected.

| Code | Item | Description | Data |
|---|---|---|---|
| [b171] | Inverter mode selection | Disable | 00 |
| | | IM mode (induction motor (IM)) | 01 |
| | | WJ200 high frequency compatible mode*1 | 02 |
| | | PM mode (synchronous motor (SM)/permanent magnet motor (PMM))*2 | 03 |
| [b180] | Execute initialization and mode selection | Initialization disabled (initial value) | 00 |
| | | Initialization execution | 01 |

*1. Set if this mode had been used in WJ200. The maximum frequency is 590 Hz. Contact your supplier or local Hitachi sales office when using the inverter for an application over 590 Hz.
*2. Contact your supplier or local Hitachi sales office when using PM mode.

!

- To change the inverter mode, it is necessary to execute initialization by setting "Execute initialization and mode selection [b180]" to "Initialization execution (01)". At that time, regardless of the setting of "Initialize target selection [b094]", all data such as parameter settings, trip history and EzSQ program will be initialized and cannot be restored. However, "Accumulated input power monitor [d016]", "Accumulated power-on time monitor [d017]" and "Initialize data selection [b085]" are not initialized.
- [b171] switches the operation mode between induction motor and synchronous motor (SM)/permanent magnet motor (PMM). Setting value becomes 00 after switching the mode.
- "WJ200 high frequency compatible mode (02)" supports V/f control for induction motor (IM). Do not use the automatic torque boost. For information on WJ200 high frequency compatible mode, please refer to "A.1.6 WJ200 high frequency compatible mode".
- Operation mode currently selected can be checked by "Inverter mode monitor [d060]".

# 8.2 Test Run

## 8.2.1 Test Run by Connecting Only the Motor

Q

- How to perform a test run by connecting only the motor to the inverter?

A

- In order to confirm that there are no fundamental problems with the inverter, motor, wiring, etc., perform a test run by connecting only the motor without load according to the following procedure.
- Set the necessary setting of the motor to be used in the test run according to the "8.1 Mandatory Setting for Operation", and then perform the test run with no load to confirm that the motor can be rotated forward, reverse, and stopped without any problems.

Note
Burnout

- Be sure to thoroughly read "Chapter 1 Safety Instructions/Risks" before starting operation.
- For a test run with a motor only, it is recommended to use V/f control for the control method.
- Do not run with an extremely smaller capacity motor than the inverter capacity. In addition, when performing a test run with a motor with a several frames smaller capacity against the inverter, set the control method to V/f control, and set the basic motor settings such as motor capacity and electronic thermal level according to the motor to be used. If the setting is incorrect, a current larger than the motor rated current may flow, resulting in motor burnout.

DO

- STOP/RESET key on the keypad can be set enable/disable. Prepare an emergency stop/emergency shut-off switch, etc., separately in case of emergency.

## When operating by inputting RUN command and frequency command from the keypad

(1) Before test run, confirm that each parameter is set correctly according to "8.1 Mandatory Setting for Operation".
(2) Set [F001], [F004], [A001], and [A002] as shown in the table below.
It is recommended that "Output frequency setting or monitor [F001]" is set to a low speed of approximately 10 Hz for safety at the first time.
The default setting of "Acceleration time 1 setting or monitor, 1st-motor [F002]"/"Deceleration time 1 setting or monitor, 1st-motor [F003]" is 10 seconds. Please change as necessary. In addition, V/f control is recommended for "Control mode selection, 1st-motor [A044]" in the test run with no load.
(3) Monitor the output frequency with [d001] and confirm that "0.00" (Hz) is displayed.
(4) When the RUN key is pressed, the running LED [RUN] of keypad lights and the motor starts to rotate.
(5) Check there are any abnormalities in output frequency monitor, actual motor rotation speed, motor rotation direction, and inverter. The motor rotation direction can be checked by "Rotation direction monitor [d003]".
(6) If no problem is found, gradually increase the output frequency by [F001].
(7) After checking the operation, press STOP/RESET key. The motor starts decelerating and after stopping, the running LED [RUN] on keypad turns off.

| Code | Item | Description | Data |
|---|---|---|---|
| [d001] | Output frequency monitor | Displays the output frequency of the inverter. | 0.00 to Maximum frequency |
| [d003] | Rotation direction monitor | Displays the operation direction of the inverter. | F (forward)/ r (reverse)/ o (stop) |
| [F001] | Output frequency setting or monitor | Set the output frequency command to the motor. | 0.0, Minimum frequency to Maximum frequency |
| [F002] | Acceleration time 1 setting or monitor, 1st-motor | Set the acceleration time/deceleration time as necessary. The default value is 10.0 (s). | 0.00 to 3600.00 (s) |
| [F003] | Deceleration time 1 setting or monitor, 1st-motor | | |
| [F004] | RUN-key command rotation direction | Set the rotation direction when operating with keypad's RUN-key. | 00(Forward)/ 01(Reverse) |
| [A001] | Frequency input source selection | Operates with the frequency reference set in "Output frequency setting or monitor". | 02 |
| [A002] | RUN command input source selection | Starts rotation by pressing keypad's RUN-key. | 02 |
| [A044] | Control mode selection | Operates with the constant torque characteristics of V/f control. | 00 |

## When operating by inputting RUN command and frequency command from control terminal

(1) Before test run, confirm that each parameter is set correctly according to "8.1 Mandatory Setting for Operation".
(2) Set [F001], [A001], [A002], [C001], and [C002] as shown in the table below.
It is recommended that "Output frequency setting or monitor [F001]" is set to a low speed of approximately 10Hz for safety at the first time.
(3) Monitor the output frequency with [d001] and confirm that "0.00" (Hz) is displayed.
(4) Check with [F001] that the analogue voltage is 0VDC and the frequency command is 0.00 (Hz). When the forward [FW] input terminal or reverse [RV] input terminal is turned ON, the running LED [RUN] of keypad lights.
(5) When the analogue voltage, which is a frequency command, is gradually increased, the motor starts to rotate.
(6) Check there are any abnormalities in output frequency monitor, actual motor rotation speed, motor rotation direction, and inverter. The motor rotation direction can be checked by "Rotation direction monitor [d003]".
(7) After checking the operation, turn OFF the forward [FW] input terminal or reverse [RV] input terminal. The motor starts decelerating and after stopping, the running LED [RUN] on keypad turns off.

| Code | Item | Description | Data |
|---|---|---|---|
| [d001] | Output frequency monitor | Displays the output frequency of the inverter. | 0.0 to Maximum frequency |
| [d003] | Rotation direction monitor | Displays the operation direction of the inverter. | F (forward)/ r (reverse)/ o (stop) |
| [F001] | Output frequency setting or monitor | When the frequency command source is analogue voltage, it becomes frequency command monitor. | 0.0, Minimum frequency to Maximum frequency |
| [F002] | Acceleration time 1 setting or monitor, 1st-motor | Set the acceleration time and deceleration time as necessary. The default value is 10.0 (s). | 0.00 to 3600.00 (s) |
| [F003] | Deceleration time 1 setting or monitor, 1st-motor | | |
| [A001] | Frequency input source selection, 1st-motor | The voltage input at the input terminal is used as a frequency command. | 01 |
| [A002] | RUN command input source selection, 1st-motor | Starts rotation by forward [FW]/reverse [RV] of the input terminal. | 01 |
| [A044] | Control mode selection, 1st-motor | Operates with the constant torque characteristics of V/f control. | 00 |
| [C001] | Input terminal [1] function | Assign "Forward [FW]". | 00 |
| [C002] | Input terminal [2] function | Assign "Reverse [RV]". | 01 |

## Example of control terminal wiring

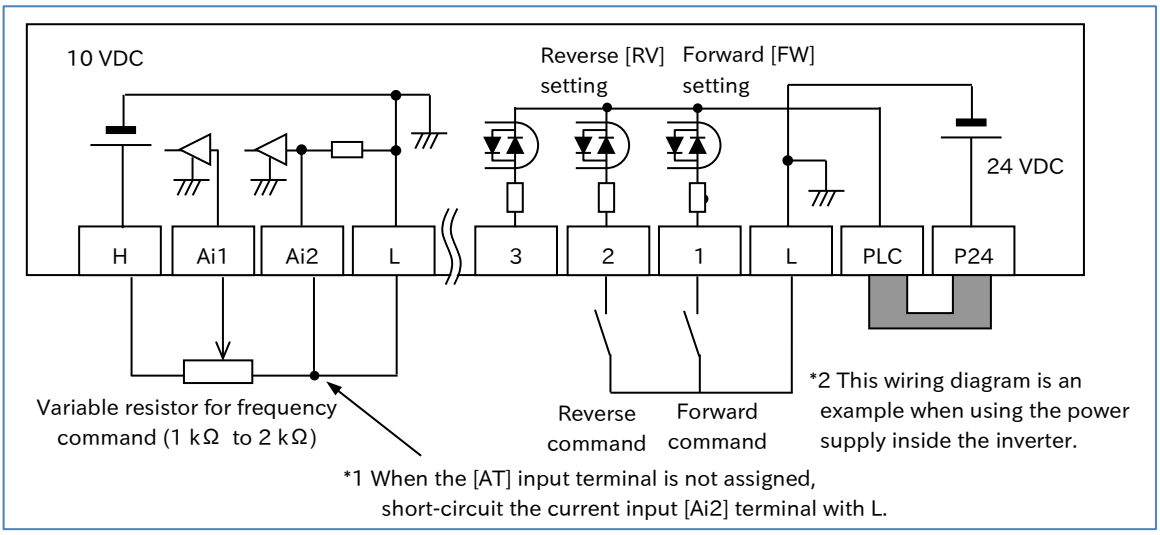


## Confirmation during test run with no load

- Confirm that the operation direction of the machine is correct, that the machine operates smoothly without abnormal noise or vibration, and that the machine operates normally without abnormal noise or vibration even if the frequency command or operation direction is changed.
- Confirm that there is no trip during acceleration/deceleration and that the rotation speed and frequency meter are correct.
- Check "Output current monitor [d002]" and "DC bus voltage monitor [d102]" to make sure that the current/ voltage values have enough margin to trip.
- If "Overcurrent error [E01] to [E04]" or "Overvoltage error [E07]" occurs during test run, try increasing the acceleration/ deceleration time.
  Refer to "Chapter 15 Tips/FAQ/Troubleshooting" for more information about tripping and troubleshooting.

## 8.2.2 Perform a Test Run with a Machine Load

Q
- How to perform a test run by connecting the motor and the load machine to the inverter?

A
- If there is no problem in operation with no load, perform a test run with an actual load connected to the mechanical system to check for any problems.

Note
Burnout
Damage

DO

- Be sure to thoroughly read "Chapter 1 Safety Instructions/Risks" before starting operation.
- Before conducting a test run with a machine load connected, be sure to perform a test run and check operation with the motor only according to "8.2.1 Test Run by Connecting Only the Motor".
- Be sure to set basic motor settings such as motor capacity and electronic thermal level according to the motor to be used. Operation with incorrect setting may cause damage to the load machine or motor burnout.
- STOP/RESET key on the keypad can be set enable/disable. Prepare an emergency stop/emergency shut-off switch separately in case of emergency.

### ■ Test run with actual load connected to load machine

(1) After confirming that the motor is completely stopped, connect the mechanical system and check that there are no loose mounting screws, etc. If an inverter is connected, wait at least 10 minutes after the power is shut off, and then use a tester or similar device to check that there is no residual voltage between [P/+] and [N/-] terminals on the main circuit terminal block, and then perform the work after confirming safety.

(2) When using automatic torque boost or sensorless control, be sure to set the motor constant of the motor to be used. For details, refer to "8.1.5 Setting Motor Constant" or "8.3 Carrying out Motor Auto-tuning". If auto-tuning is not possible when the load machine is connected, perform auto-tuning with no load connected only to the motor in advance, calculate the moment of inertia of the load in terms of motor axis conversion, and add it to "motor constant J".

(3) After selecting the frequency command, RUN command input source selection, and other required settings, turn on RUN command to start operation. It is recommended that the frequency reference is set to a low speed of approximately 10 Hz for safety at the first time.

(4) Check the following items to see if there is any problem with the operation status.

### ■ Confirmation during test run at actual load

- Confirm that the operation direction of the machine is correct, that the machine operates smoothly.
- If possible, confirm that there is no abnormal noise or vibration even if the frequency command or operation direction is changed.
- Confirm that there is no trip during acceleration/deceleration and that the rotation speed and frequency meter are correct.
- Confirm that "Overcurrent error [E01] to [E04]," " Overload error [E05]," and "Overvoltage error [E07]" do not occur during test run.
- Check "Output current monitor [d002]," "DC bus voltage monitor [d102]," and "Electronic thermal load ratio monitor (motor) [d104]" to make sure that the current, voltage, and load ratio values have enough margin to trip.
- If the operation during V/f control is not stable, refer to "9.5.6 Stabilizing Motor Hunting" for adjustment.
- If sufficient characteristics cannot be obtained, such as when a shock occurs at start-up and the motor is disturbed during operation with automatic torque boost or sensorless vector control, refer to "9.5.3 Using Torque Boost Function" and "9.5.7 Driving with Sensorless Vector Control" for adjustment.
- See "Chapter 15 Tips/FAQ/Troubleshooting" for more information about tripping and troubleshooting additional issues.

# 8.3 Carrying Out Motor Auto-tuning

## 8.3.1 Procedure for Auto-tuning of an Induction Motor

Q

- How to use a motor other than the Hitachi standard induction motor?
- How to solve the unstable drive of the motor?
- What should be done if the environment of the adjusted motor has changed?
- What should be done if wiring was re-performed from the test run condition?
- What should be done if the motor and wiring were replaced?

A

- The auto-tuning function measures the required motor constants and sets them automatically to increase the accuracy of automatic torque boost, sensorless vector control, etc.
- When using a motor whose motor constants are unknown, perform auto-tuning to measure the motor constants.
- "Motor rotate" and "Motor not rotate" can be selected for auto-tuning. Select according to the situation.
- The measured motor constants are data (including wiring) for one phase of Y connection.

!

- The motor constants of Hitachi standard induction motor are set as default value. When using a Hitachi standard induction motor, characteristics can be obtained without problems in most cases even if auto-tuning is not performed.
- Smooth tuning could be done if the auto-tuning is first performed for the factory-set parameters.
- The motor capacity that can be measured is the maximum applicable capacity and one size smaller capacity. Otherwise, the correct constants may not be obtained. When performing auto-tuning with one size smaller capacity motor, set "Overload restriction 1 mode selection [b021]" to "Enable during accel. and constant speed (01)", and set "Overload restriction 1 active level [b022]" to 1.5 times the motor rated current.

### ■ When using the motor constant of auto-tuning

| Code | Item | Description | Data |
|---|---|---|---|
| [H001] | Auto-tuning selection | Disable | 00 |
| | | Enable without rotation | 01 |
| | | Enable with rotation | 02 |
| [H002]*1 | Async. Motor constant selection | Auto-tuning data (Apply [H030]*1 to [H034]*1) | 02 |
| [H003]*1 | Async. Motor capacity | Set according to the specifications of the motor. | 0.1 to 18.5 (kW) |
| [H004]*1 | Async. Motor number of poles | Set according to the specifications of the motor. | 2/4/6/ to /46/48 (poles) |
| [H030]*1 | Async. Motor constant R1 (Auto-tuning data) | Parameter for setting the motor constant when performing auto-tuning. When using these parameters, set "Async. Motor constant selection [H002]*1" to "Auto-tuning data (02)". After performing auto-tuning, it is also possible to adjust and change it manually. | 0.001 to 65.535 (Ω) |
| [H031]*1 | Async. Motor constant R2 (Auto-tuning data) | | 0.001 to 65.535 (Ω) |
| [H033]*1 | Async. Motor constant I0 (Auto-tuning data) | | 0.01 to 655.35 (A) |
| [H034]*1 | Async. Motor constant J (Auto-tuning data) | | 0.001 to 9999.000 ($kgm^2$) |
| [A003]*1 | Base frequency | Set according to the specifications of the motor. | 30.0 to Maximum frequency (Hz) |
| [A045]*1 | Output voltage gain | If an appropriate value does not exist in [A082], adjust it. | 20 to 100 (%) |
| [A082]*1 | Motor rated voltage | Set according to the specifications of the motor. | 200 V: 200/215/220/230/240 (V)<br>400 V: 380/400/415/440/460/480 (V) |
| [b033] | Motor cable length code selection | Parameter that corrects the current detection accuracy due to difference in motor cable length. If the motor constant cannot be measured correctly, set higher value. | 5 to 20 |

*1. "2nd-motor control [SET]" target parameter. The second control parameter is also subject to setting.

## Auto-tuning execution step

### 1 Parameter presetting

(1) Set "Async. Motor capacity, 1st-motor [H003]" and "Async. Motor number of poles, 1st-motor [H004]" according to the motor to be used.
(2) Match the "Base frequency, 1st-motor [A003]" and "Motor rated voltage, 1st-motor [A082]" to the specifications of the motor to be measured. If there is no selection in [A082] that matches the motor rated voltage, set the closest and higher value. Also, set "Output voltage gain, 1st-motor [A045]" so that the equation is as follows.
Output voltage gain [A045] × Motor rated voltage [A082] = Motor rated voltage
(3) Set "DC braking selection [A051]" and "Simple positioning selection [P012]" to "Disable (00)". If they are not "Disable (00)", the correct measurement will not be made.
(4) Set the motor cable length in "Motor cable length code selection [b033]."
The motor cable length code selection is a parameter that corrects the current detection accuracy due to difference in motor cable length. It is not necessary to set for models of 11 kW and 15 kW. If the motor cable length is long (exceeding 20 m), sufficient auto-tuning may not be performed.
(5) Do not turn on "Permission of torque control [ATR] (52)" of the input terminal function. If [ATR] is turned on, the correct measurement will not be performed.

### 2 Selection of "With rotation" and "Without rotation"

- Set to [H001] whether the motor rotates or not during auto-tuning. Each has the following characteristics.

| Item | Description |
|---|---|
| Without rotation [H001]: 01 | The motor constants are measured without rotating the motor. Use this function when the motor must not rotate. Since the motor does not rotate, the motor constant I0 (no-load current) and motor constant J (moment of inertia) cannot be measured.<br>Even if "Without rotation", the motor may rotate slightly. |
| With rotation [H001]: 02 | The motor constants are measured by actually rotating the motor. Use this function when there is no problem even if the motor rotates. |

Warning
Injury
Failure

DO

- When "With rotation" is selected, pay attention to the following points.
  - Rotating up to about 80% of the base frequency shall not cause any problem.
  - The motor is not driven by external force.
  - The brake is open.
- Since the output torque is not much during auto-tuning, there is a possibility that the load machine may fall down in a lift or similar applications. In such applications, remove the motor from the load machine and perform auto-tuning on the motor alone. Since the motor constant J (moment of inertia) to be measured is a value for motor only, separately add the value obtained by converting the moment of inertia of the load machine to the motor axis and set it.
- Since in case of the machine that motor shaft rotation amount is limited (lift, ball screw, etc.), the machine may be damaged due to the drive exceeding the allowable rotation amount, select "Without rotation" or remove the motor from the load machine and perform auto-tuning on the motor alone.

To the next page

## 3 Execute Auto-tuning

- When RUN command according to the setting of "RUN command input source selection [A002]" is "ON", automatic operation starts as follows. Auto-tuning can be cancelled when RUN command is "OFF". However, tuning data are not stored.
- If abnormal termination or trip occurs during auto-tuning, remove the cause of the error by referring to "Countermeasure when auto-tuning fails halfway" on the next page.

(1) 1st AC excitation (The motor does not rotate.)
↓
(2) 2nd AC excitation (The motor does not rotate.)
↓
(3) 1st DC excitation (The motor does not rotate.)
↓
(4) V/f control operation (The motor rotates up to 80% of the base frequency.)*1
↓
(5) Sensorless vector control operation (The motor rotates to the X%*2 of the base frequency.)*1
↓
(6) 2nd DC excitation (The motor does not rotate.)
↓
(7) Displays the tuning result.*3

*1. (4) and (5) are not executed when "Without rotation".
*2. The rotation speed in (5) is as shown below, assuming that T is the larger of the acceleration time and deceleration time in (4).
When 0 s < T < 50 s: X = 40%
When 50 s ≦ T < 100 s: X = 20%
When 100 s ≦ T: X = 10%
*3. The tuning result is displayed as shown below.
If the tuning ends abnormally, perform auto-tuning again.
Press STOP/RESET key to cancel the display.

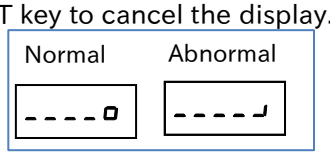


## 4 Setting after auto-tuning

- After normal completion, set "Async. Motor constant selection, 1st-motor [H002]" to "Auto-tuning data (02)". The auto-tuning motor constants [H030] to [H034] are enabled. (Tuning data will not be applied unless set.)
- When auto-tuning is performed without rotating the motor, the motor constant I0 (no-load current) and motor constant J (moment of inertia) are not measured. Set as follows.
- After completion of auto-tuning, "Auto-tuning selection [H001]" automatically returns to "Disable (00)" regardless of normal completion/abnormal termination. To execute auto-tuning again, set again.
  - No-load current I0: Set the "Control mode selection, 1st-motor [A044]" as "V/f Constant torque characteristics (IM) (00)", and measure the no-load current in advance by driving only motor at the frequency equal to the "Base frequency [A003]". Or, set the motor no-load current checked with the motor manufacturer to "Motor constant I0".
  - Moment of inertia J: Calculate the moment of inertia of the load in terms of the motor axis conversion, and set the value obtained by adding the calculated value to the moment of inertia of the motor alone to "Async. Motor constant J [H034]."

- Countermeasure when auto-tuning fails halfway
- If an abnormal termination or trip occurs and forced termination occurs during auto-tuning, refer to the following table and "Chapter 15 Tips/FAQ/Troubleshooting" to remove the abnormal termination or trip factor. Then, set [H001] to 01 or 02 again and perform auto-tuning again.

| Possible causes | Example of countermeasures |
|---|---|
| The control system does not match the motor. | Set "Control mode selection, 1st-motor [A044]" to "V/f Constant torque characteristics (00)". Otherwise, it may terminate abnormally. |
| The base frequency, motor rated voltage, and motor rated current do not match the motor specifications. | If the basic parameters of the motor are not correct, trip such as overcurrent may occur. Check and set the basic parameters.<br>Also, set so that "Output voltage gain [A045]" × "Motor rated voltage [A082]" equals to the rated voltage of the motor. |
| The STOP/RESET key was pressed. | If the STOP/RESET key on the keypad is pressed, auto-tuning is interrupted. Check the auto-tuning setting again and execute. |
| Trip occurred due to external factors such as brake. | The cause of the trip must be removed. |
| The input terminal function was activated. | During auto-tuning, if the input terminal function operates, tuning may be hindered. Execute auto-tuning after confirming the input terminal functions are OFF. |
| The motor capacity is too small against the applicable motor capacity of the inverter. | If the tuning is not completed properly, the motor constants must be set manually. |
| An overvoltage error [E07] occurred because the machine load was large or the deceleration time was short. | Increase the deceleration time.<br>Perform auto-tuning with a motor alone. |
| An "Overcurrent error ([E01] to [E03])" occurred during acceleration or deceleration due to a large load. | Increase the acceleration time. |

(Memo)

9

# Chapter 9 Inverter Functions

This chapter describes the various functions of the inverter. Please select the function you wish to use and then configure the settings.
When performing each work, carefully read "Chapter 1 Safety Instructions/Risks" and the corresponding chapters, and pay attention to safety.


**9.1 Selecting RUN Command and Alarm Reset ..... 9-1-1**
9.1.1 Types of RUN Command ..... 9-1-1
9.1.2 Operation by RUN Key on the Keypad ..... 9-1-2
9.1.3 Operation by Forward/Reverse Input Terminals ..... 9-1-3
9.1.4 Operation by Pushbutton (Momentary Switch) Input ..... 9-1-4
9.1.5 Operation by Modbus-RTU Communication (RS485 Communication) ..... 9-1-5
9.1.6 Operation by Communication Option Board ..... 9-1-6
9.1.7 Temporarily Changing RUN Command Input Source ..... 9-1-7
9.1.8 Disabling the STOP/RESET Key on the Keypad ..... 9-1-8
9.1.9 Resetting an Alarm ..... 9-1-9

**9.2 Selecting Frequency Command ..... 9-2-1**
9.2.1 Types of Frequency Command ..... 9-2-1
9.2.2 Setting Frequency Command by Keypad ..... 9-2-3
9.2.3 Setting Frequency Command by Analog Inputs (Voltage/Current) ..... 9-2-4
9.2.4 Setting Frequency Command by Multi-Speed Operation Function ..... 9-2-7
9.2.5 Setting Frequency Command for Jogging and Inching Operation ..... 9-2-10
9.2.6 Setting Frequency Command by Modbus-RTU Communication (RS485 Communication) ..... 9-2-11
9.2.7 Setting Frequency Command by Communication Option Board ..... 9-2-12
9.2.8 Setting Frequency Command by Pulse Input ..... 9-2-13
9.2.9 Setting Frequency Command by Program Operation Function EzSQ ..... 9-2-14
9.2.10 Setting Frequency Command by PID Control ..... 9-2-15
9.2.11 Setting Frequency Command by Calculation Operation ..... 9-2-16
9.2.12 Temporarily Adding a Set Value to the Frequency Command ..... 9-2-17
9.2.13 Increasing/Decreasing Frequency Command by Remote Control ..... 9-2-18
9.2.14 Temporarily Changing the Frequency Command Input Source ..... 9-2-21
9.2.15 Setting Frequency Command on Frequency Monitor ..... 9-2-22

**9.3 Using Motor Acceleration/Deceleration Function ..... 9-3-1**
9.3.1 Changing the Acceleration/Deceleration Time ..... 9-3-1
9.3.2 Switching the Acceleration/Deceleration Time in Two Stages ..... 9-3-3
9.3.3 Stopping Acceleration/Deceleration ..... 9-3-4
9.3.4 Changing the Acceleration/Deceleration Pattern ..... 9-3-5
9.3.5 Making the Frequency Instantaneously Follow the Command ..... 9-3-7

**9.4 Limiting Frequency Command/RUN Command ..... 9-4-1**
9.4.1 Limiting Frequency Command ..... 9-4-1
9.4.2 Limiting RUN Command Direction ..... 9-4-2
9.4.3 Limiting Rotation Output Direction ..... 9-4-3
9.4.4 Disabling Output Until RUN Command Permission ..... 9-4-4

**9.5 Selecting Control Mode for the Motor and Load ..... 9-5-1**
9.5.1 Selection of Control Mode ..... 9-5-1
9.5.2 Driving with V/f Control ..... 9-5-2
9.5.3 Using Torque Boost Function ..... 9-5-5
9.5.4 Driving with Energy-saving Mode ..... 9-5-7
9.5.5 Driving with V/f Control with Encoder ..... 9-5-8
9.5.6 Stabilizing Motor Hunting ..... 9-5-10
9.5.7 Driving with Sensorless Vector Control ..... 9-5-11
9.5.8 Using Encoder Feedback ..... 9-5-14

**9.6 Speed/Torque Control According to Load ..... 9-6-1**
9.6.1 Speed Control and Torque Control ..... 9-6-1
9.6.2 Driving with Limited Torque ..... 9-6-2
9.6.3 Driving by Torque Reference ..... 9-6-5
9.6.4 Driving with Torque Bias ..... 9-6-6

**9.7 Selecting Start/Stop Modes ..... 9-7-1**
9.7.1 Starting with Gradually Increasing Voltage ..... 9-7-1
9.7.2 Starting with DC Braking ..... 9-7-2
9.7.3 Starting with Frequency Matching ..... 9-7-3
9.7.4 Starting with Active Frequency Matching ..... 9-7-4
9.7.5 Starting after Trip Reset or Power-on ..... 9-7-8
9.7.6 Starting after Free Run Stop ..... 9-7-9
9.7.7 Selecting Stop Operation ..... 9-7-10
9.7.8 Stopping with DC Braking ..... 9-7-11
9.7.9 Switching to Commercial Power Supply (Commercial Power Supply Change) ..... 9-7-15
9.7.10 Starting and Stopping with External Brake Control ..... 9-7-16
9.7.11 Switching Between Two Motors ..... 9-7-18

**9.8 Driving by PID Process Control ..... 9-8-1**
9.8.1 Using PID Control ..... 9-8-1

**9.9 Using Trip Prevention Functions ..... 9-9-1**
9.9.1 Restriction to Avoid Overload ..... 9-9-1
9.9.2 Restriction to Avoid Overcurrent ..... 9-9-3
9.9.3 Suppressing Overvoltage by Controlling Output Frequency ..... 9-9-4
9.9.4 Suppressing Overvoltage by Controlling Output Voltage ..... 9-9-6
9.9.5 Suppressing Overvoltage with Braking Resistor ..... 9-9-8
9.9.6 Restarting after Instantaneous Power Failure/Undervoltage ..... 9-9-9
9.9.7 Restarting after Overvoltage/Overcurrent ..... 9-9-14
9.9.8 Continuing to Drive Even after Instantaneous Power Failure/Undervoltage Error ..... 9-9-17

**9.10 Using System Protection Functions ..... 9-10-1**
9.10.1 Adjusting Carrier Frequency ..... 9-10-1
9.10.2 Automatically Reducing Carrier Frequency ..... 9-10-2
9.10.3 Externally Tripping the Inverter ..... 9-10-3
9.10.4 Preventing Unattended Start at Power-on ..... 9-10-4
9.10.5 Avoiding Mechanical Resonance of Motor and Machine ..... 9-10-5
9.10.6 Selecting Cooling Fan Operation ..... 9-10-6
9.10.7 Monitoring Motor Temperature ..... 9-10-7

**9.11 Outputting Warning Signals to Terminals ..... 9-11-1**
9.11.1 Outputting an Alarm Signal ..... 9-11-1
9.11.2 Outputting a Major Failure Signal ..... 9-11-2
9.11.3 Outputting a Warning When Overload Occurs ..... 9-11-3
9.11.4 Outputting a Warning When Current Is Low ..... 9-11-4
9.11.5 Outputting a Warning before Electronic Thermal Protection ..... 9-11-5
9.11.6 Outputting a Warning When Cooling Fin Temperature Rises ..... 9-11-6
9.11.7 Outputting a Warning for Capacitor Life on the Control Board ..... 9-11-7
9.11.8 Outputting a Warning for Cooling Fan Life ..... 9-11-8
9.11.9 Outputting a Warning When RUN Time or Power-on Time Elapses ..... 9-11-9
9.11.10 Detecting Analog Input Disconnection/Out of Range ..... 9-11-10

**9.12 Outputting Running Status to Terminals ..... 9-12-1**
9.12.1 Outputting a Signal during Running ..... 9-12-1
9.12.2 Outputting a Signal during Forward/Reverse Running ..... 9-12-2
9.12.3 Outputting a Signal When RUN Command Is Given ..... 9-12-3
9.12.4 Outputting a Signal When Inverter Is Ready to Run ..... 9-12-4

**9.13 Outputting Signals According to the Output Frequency ..... 9-13-1**
9.13.1 Outputting a Signal When the Output Frequency Reaches the Target ..... 9-13-1
9.13.2 Outputting a Signal When the Output Frequency Exceeds the Set Value ..... 9-13-2
9.13.3 Outputting a Signal When the Output Frequency Is Close to the Set Value ..... 9-13-3
9.13.4 Outputting a Signal When the Output Frequency is Close to 0 Hz ..... 9-13-4
9.13.5 Outputting a Signal by Combining Two Output Signals ..... 9-13-5

**9.14 Performing Positioning Operation (Simple Position Control Function) ..... 9-14-1**
9.14.1 Overview of Simple Position Control Function and Basic Settings ..... 9-14-1
9.14.2 Performing Homing Function during Positioning Operation ..... 9-14-8
9.14.3 Operating by Switching between Speed Control and Position Control ..... 9-14-12
9.14.4 Operating Simple Position Control with Brake Control ..... 9-14-13

**9.15 Functions with External Signal Input ..... 9-15-1**
9.15.1 Using External I/O Input Signal Functions ..... 9-15-1
9.15.2 Adjusting I/O Input Signal Response ..... 9-15-3
9.15.3 Adjusting the Analog Input ..... 9-15-4

**9.16 Functions with External Signal Output ..... 9-16-1**
9.16.1 Using External I/O Output Signal Functions ..... 9-16-1
9.16.2 Delaying and Holding Output Signals ..... 9-16-4
9.16.3 Outputting Monitor Data by Pulse Output ..... 9-16-5
9.16.4 Outputting Monitor Data by Analog Output ..... 9-16-7

# 9.1 Selecting RUN Command and Alarm Reset

## 9.1.1 Types of RUN Command

Q

- What are the types of RUN command that can be selected for the inverter?

A

- The RUN command input source can be set in "RUN command input source selection [A002][*1]". For details, refer to the explanation in the following section and beyond.

RUN command input sources

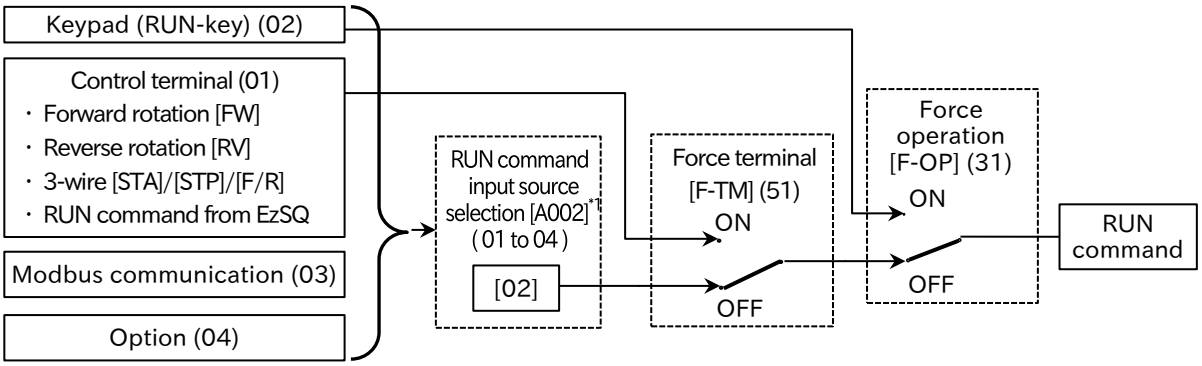


(The values in square brackets and the switch positions shown in the figure are the default values.
In addition, all functions not assigned to input terminals [1] to [7] are turned off.)

!

- To use the "Forward rotation [FW]/Reverse rotation [RV]" or the 3-wire control function terminals ([STA]/[STP]/[F/R]) for RUN command, set "RUN command input source selection [A002][*1]" to "Control terminal (01)".
- If both the "Forward rotation [FW]/Reverse rotation [RV]" and the "3-wire stop [STP]" terminals are assigned, the RUN command from the 3-wire terminal is given priority and the "Forward rotation [FW]/Reverse rotation [RV]" terminals are disabled.
- By setting the "RUN command input source selection [A002][*1]" parameter to "Control terminal (01)", the <FW>/<RV>/<STA>/<STP>/<F/R> reserved variables of the program operation function EzSQ are enabled and can also respond to commands.
- When "Force operation [F-OP]" or "Force terminal [F-TM]" of the input terminal function are turned on, the RUN command input source is switched to the keypad or control terminal, regardless of the "RUN command input source selection [A002][*1]" setting.

*1. "2nd-motor control [SET]" target parameter. The second control parameter is also subject to setting.

## 9.1.2 Operation by RUN Key on the Keypad

Q

- How to operate the inverter via the keypad during a test run?
- How to operate the inverter via the RUN key on the keypad?

A

- To start or stop the inverter using the RUN and STOP/RESET keys on the keypad or the optional remote operator (OPE-SR/OPE-SR mini, etc.), set the "RUN command input source selection [A002][*1]" parameter to "Keypad (RUN-key) (02)".
- To start operation using the RUN key on the keypad, set the correct direction of operation with "RUN-key command rotation direction [F004]".

| Code | Item | Description | Data |
|---|---|---|---|
| [A002][*1] | RUN command input source selection | Operation is started and stopped using the RUN and STOP/RESET keys on the keypad or optional remote operator. | 02 |
| [F004] | RUN-key command rotation direction | Forward rotation operation from the keypad. | 00 |
| | | Reverse rotation operation from the keypad. | 01 |
| [C021]<br>[C022]<br>[C026] | Output terminal function | RUN command by keypad [REF]:<br>This output terminal turns on when inverter RUN command can be initiated using the RUN key on the keypad. | 59 |

*1. "2nd-motor control [SET]" target parameter. The second control parameter is also subject to setting.

!

- For the inverter to start operation, a frequency command is required in addition to a RUN command.

## 9.1.3 Operation by Forward/Reverse Input Terminals

**Q**

- How to start or stop operation by an input signal to the control circuit terminal block?
- How to switch between forward and reverse rotation by turning on/off the input terminal on the control circuit terminal block?

**A**

- To perform forward/reverse rotation and stop operation using the forward/reverse rotation input terminals on the control circuit terminal block, set the "RUN command input source selection [A002][*1]" to "Control terminal (01)" and assign "Forward rotation [FW]" and "Reverse rotation [RV]" to "Input terminal function [C001] to [C007]".
- In the factory default state, "Forward rotation [FW]" is assigned to terminal 1 and "Reverse rotation [RV]" to terminal 2.
  The terminal assignments can be changed by configuring "Input terminal function [C001] to [C007]".
- The a/b (NO/NC) contact state can be changed for each terminal by configuring the "Input terminal active state [C011] to [C017]".
- If the [FW] and [RV] terminals are both on at the same time, a stop command is issued. The relationship between the [FW]/[RV] terminal input states and the RUN commands is shown in the following table.

### Forward rotation [FW]/Reverse rotation [RV] terminal states and RUN commands

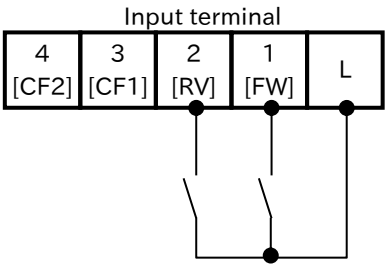


| FW terminal | RV terminal | RUN command |
|---|---|---|
| OFF | OFF | Stop command |
| ON | OFF | Forward rotation command |
| OFF | ON | Reverse rotation command |
| ON | ON | Stop command |

| Code | Item | Description | Data |
|---|---|---|---|
| [A002][*1] | RUN command input source selection | The RUN command from the control terminal is enabled, and inverter operation can be started and stopped using the "Forward rotation [FW]"/"Reverse rotation [RV]" input terminals. | 01 |
| [C001] to [C007] | Input terminal function | Forward rotation [FW]: When turned on, operation is in the forward direction. | 00 |
| | | Reverse rotation [RV]: When turned on, operation is in the reverse direction. | 01 |
| [C011] to [C017] | Input terminal active state | "a" contact state (NO: Normally Open) | 00 |
| | | "b" contact state (NC: Normally Closed) | 01 |

*1. "2nd-motor control [SET]" target parameter. The second control parameter is also subject to setting.

**!**

- For the inverter to start operation, a frequency command is required in addition to a RUN command.
- By setting the "RUN command input source selection [A002][*1]" to "Control terminal (01)", the reserved variables <FW>/<RV> of the program operation function EzSQ are enabled and can also respond to commands.

## 9.1.4 Operation by Pushbutton (Momentary Switch) Input

**Q**

- How to operate the inverter using a terminal input signal?
- How to start operation using a pushbutton switch?
- How to use the operation buttons as momentary instead of self-latching?

**A**

- To perform forward/reverse rotation and stop operation using 3-wire control function, set the "RUN command input source selection [A002][*1]" to "Control terminal (01)" and assign "3-wire start [STA]", "3-wire stop [STP]", and "3-wire Forward/Reverse [F/R]" to "Input terminal function [C001] to [C007]".
- When the [STP] terminal is ON, operation is started by a rising-edge input on the [STA] terminal. Turning off the [STP] terminal while the inverter is running will stop the operation.
- The "3-wire stop [STP]" terminal is fixed to the "b" (NC) digital input state regardless of the a/b (NO/NC) setting for the corresponding terminal number.
- When the "3-wire stop [STP]" terminal is assigned, the "Forward rotation [FW]"/"Reverse rotation [RV]" terminals are disabled.

### Example of terminal assignment and operation when using the 3-wire control function

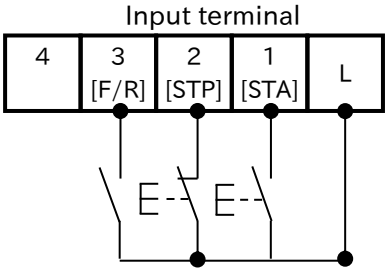


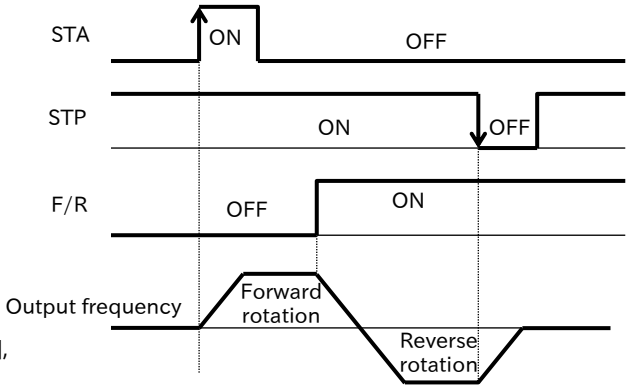


This example shows a terminal assignment consisting of Terminal 1 = [STA], Terminal 2 = [STP], and Terminal 3 = [F/R].

| Code | Item | Description | Data |
|---|---|---|---|
| [A002][*1] | RUN command input source selection | The [STA] and [STP] input terminals from the control circuit terminal block are used to start and stop inverter operation. | 01 |
| [C001] to [C007] | Input terminal function | 3-wire start [STA]:<br>The start signal for the 3-wire control function. Operation starts if [STA] is ON while [STP] is ON (circuit is normally open due to the "b" contact state). | 20 |
| | | 3-wire stop [STP]:<br>The stop signal for the 3-wire control function. It switches to the "b" (NC) contact state during assignment. The inverter stops when it is OFF state. | 21 |
| | | 3-wire Forward/Reverse [F/R]:<br>OFF = Forward rotation, ON = Reverse rotation | 22 |

**!**

- For the inverter to start operation, a frequency command is required in addition to a RUN command.
- By setting the "RUN command input source selection [A002][*1]" to "Control terminal (01)", the reserved variables <STA>/<STP>/<F/R> of the program operation function EzSQ are enabled and can also respond to commands.

*1. "2nd-motor control [SET]" target parameter. The second control parameter is also subject to setting.

## 9.1.5 Operation by Modbus-RTU Communication (RS485 Communication)

Q

- How to operate the inverter using Modbus-RTU communication (RS485 communication) commands?

A

- To perform forward/reverse rotation and stop operation using Modbus-RTU communication (RS485 communication), set the "RUN command input source selection [A002][*1]" to "Modbus communication (03)".

| Code | Item | Description | Data |
|---|---|---|---|
| [A002][*1] | RUN command input source selection | Modbus-RTU communication (RS485 communication) commands are used to start and stop inverter operation. | 03 |

*1. "2nd-motor control [SET]" target parameter. The second control parameter is also subject to setting.

!

- For the inverter to start operation, a frequency command is required in addition to a RUN command.
- For more information regarding Modbus-RTU communication (RS485 communication), refer to "Chapter 11 RS485 Communication".

## 9.1.6 Operation by Communication Option Board

Q

- How to operate the inverter using communication option board?

A

- To perform forward/reverse rotation and stop operation using the communication option board, set the "RUN command input source selection [A002][*1]" to "Option (04)". For details, refer to the Guides for each communication option board.

| Code | Item | Description | Data |
|---|---|---|---|
| [A002][*1] | RUN command input source selection | Commands from the option board are used to start and stop inverter operation. | 04 |

*1. "2nd-motor control [SET]" target parameter. The second control parameter is also subject to setting.

!

- For the inverter to start operation, a frequency command is required in addition to a RUN command.

## 9.1.7 Temporarily Changing RUN Command Input Source

**Q**

- How to temporarily change the RUN command input source to the RUN key on the keypad?
- How to temporarily change the RUN command input source to the input signals from the control circuit terminal block?

**A**

- When the "Force operation [F-OP]" input terminal is turned on, the RUN and the STOP/RESET keys on the keypad can be used to issue operation start and stop commands, having priority over the RUN command input source specified by the "RUN command input source selection [A002][*1]".
- When the "Force terminal [F-TM]" input terminal is ON, the [FW]/[RV] terminals or the 3-wire control function ([STA]/[STP]/[F/R]) terminals on the control circuit terminal block can issue operation start and stop commands, having priority over the RUN command input source specified by the "RUN command input source selection [A002][*1]".

### "Force operation [F-OP]" / "Force terminal [F-TM]" operation

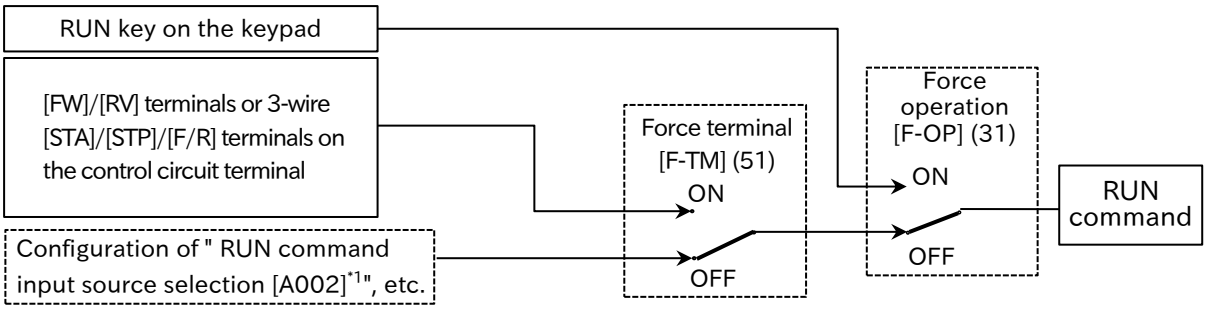


(All functions not assigned to input terminals [1] to [7] are turned off.)

| Code | Item | Description | Data |
|---|---|---|---|
| [C001] to [C007] | Input terminal function | Force operation [F-OP]:<br>When this terminal is ON, the RUN command and frequency command input source are switched to the keypad. | 31 |
| | | Force terminal [F-TM]:<br>When this terminal is ON, the RUN command and frequency command input source are switched to the control circuit terminal block. | 51 |

*1. "2nd-motor control [SET]" target parameter. The second control parameter is also subject to setting.

**!**

- When the [F-OP] or [F-TM] input terminals are ON, the frequency command input source changes to the parameter setting from the keypad or analog input from the control circuit terminal. For details, refer to "9.2.14 Temporarily Changing the Frequency Command Input Source".
- When the [F-OP] or [F-TM] terminals are ON/OFF during inverter operation, the inverter will stop. To restart operation, the RUN command must be turned off and on again.
- If the [F-OP] and [F-TM] terminals are turned on at the same time, the [F-OP] terminal is given priority.

## 9.1.8 Disabling the STOP/RESET Key on the Keypad

Q

- How to prevent the operation from being accidentally stopped from the keypad when the inverter is operating via external RUN command?
- How to perform a trip reset without stopping the operation currently performing via communication?

A

- When the "RUN command input source selection [A002][*1]" is set to anything other than "Keypad (RUN-key) (02)", the inverter stop command from the keypad can be disabled by setting "STOP/RESET-key enable [b087]" to "Disable (01)" or "Enable at only trip reset (02)".
- If you wish to use the keypad STOP/RESET key input signal only to perform a trip reset, set the "STOP/RESET-key enable [b087]" to "Enable at only trip reset (02)".

!

- If you wish to be able to issue a stop command from the keypad in the event of an emergency, set the "STOP/RESET-key enable [b087]" to "Enable (00)".
- The keypad STOP/RESET key can be used to stop the machine even if the RUN command is given by a source other than the keypad in the normal case.
- When the RUN command is given by the external signal, a stop command from the keypad will stop operation to ensure safety. To restart operation, the external signal must be turned off and on again.

| Code | Item | Description | Data |
|---|---|---|---|
| [A002][*1] | RUN command input source selection | Starting and stopping operation via the Forward rotation [FW]/ Reverse rotation [RV] terminals. | 01 |
| | | Starting and stopping operation via the 3-wire control function. | |
| | | Starting and stopping operation via the keypad. | 02 |
| | | Starting and stopping operation via Modbus communication. | 03 |
| | | Starting and stopping operation via input from a communication option board. | 04 |
| [b087] | STOP/RESET-key enable | Enable:<br>The keypad STOP/RESET key is always enabled. | 00 |
| | | Disable:<br>The keypad STOP/RESET key is disabled when the "RUN command input source selection [A002][*1]" is set to anything other than "Keypad (RUN-key)". | 01 |
| | | Enable only for trip reset:<br>The keypad STOP/RESET key can be used to reset a trip only after the inverter has tripped. | 02 |

*1. "2nd-motor control [SET]" target parameter. The second control parameter is also subject to setting.

## 9.1.9 Resetting an Alarm

**Q**

- How to reset a trip?
- How to enable reset to be performed via the [RS] terminal only in the event of a trip?

**A**

- Perform the trip release procedure on the inverter.
- To perform a reset, press the keypad STOP/RESET key or assign "Reset [RS] (18)" to an input terminal and then turn on that terminal.
- The [RS] terminal only supports a contact (NO) input state. "Input terminal active state ([C011] to [C017])" is disabled.
- The timing of the trip release via the [RS] terminal can by selected by the "Reset mode selection [C102]". The [RS] terminal can also be only enabled for trip release.
- Restart method after resetting can be selected by the "Restart mode after RS release [C103]" For details, refer to "9.7.5 Starting after Trip Reset or Power-on".

**!**

- Do not use the [RS] terminal to shut off the inverter output (motor free run stop). Be sure to use the "Free run stop [FRS] (11)" input when shut off the inverter output with an I/O signal input.
- The [RS] input does not clear internal data such as the electronic thermal load ratio, BRD load ratio, and the current position counter.

| Code | Item | Description | Data |
|---|---|---|---|
| [C102] | Reset mode selection | Trip release at turn-ON<br>When normal: Output shut-off (Example 3)<br>When abnormal: Trip release (Example 1) | 00 |
| | | Trip release at turn-OFF<br>When normal: Output shut-off (Example 3)<br>When abnormal: Trip release (Example 2) | 01 |
| | | Only release during trip (Trip release at turn-ON)<br>When normal: Disabled (Example 4)<br>When abnormal: Trip release (Example 1) | 02 |
| | | Only release during trip*1 | 03 |

*1. (03) setting is the same operation as when (02) is set.

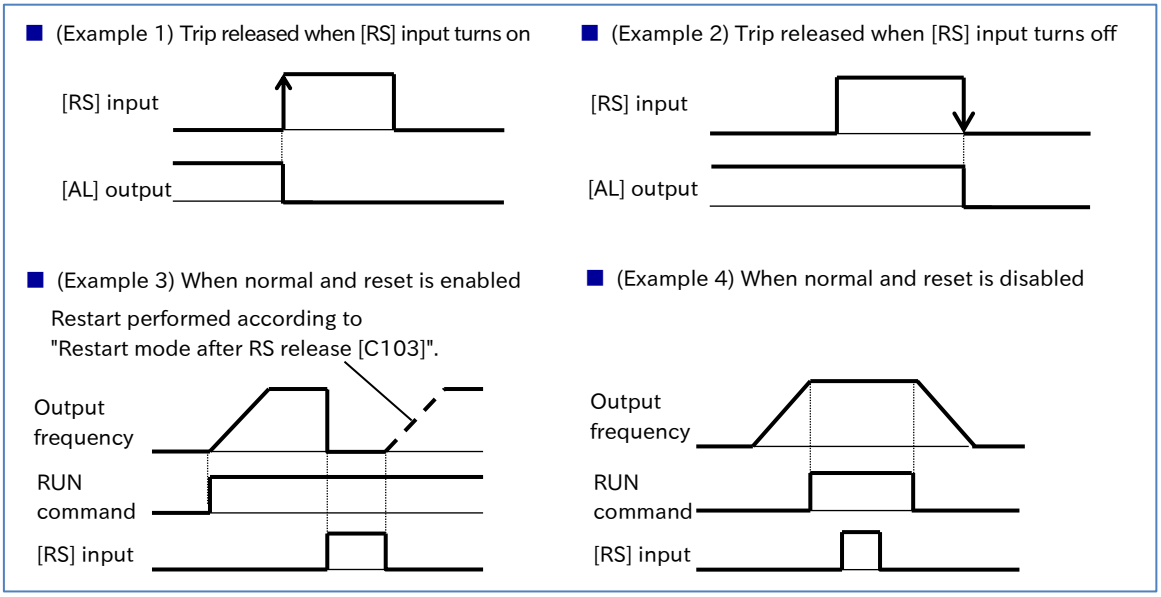

# 9.2 Selecting Frequency Command

## 9.2.1 Types of Frequency Command

**Q**

- What types of frequency command input sources can be selected for the inverter and what is their order of priority?

**A**

- The following diagram shows the parameters and input terminal functions that affect the output frequency command input source selection.
- The command input source is set according to the "Frequency input source selection [A001][*1]". Please note that when multiple settings are turned on, the frequency command for each input terminal function is selected with the following order or priority: "Multi-speed selection [CF1] to [CF4]/[SF1] to [SF7] (02 to 05/32 to 38)", "Force terminal [F-TM] (51)", "Force operation [F-OP] (31)" and then "Jogging [JG] (06)".
- When the command input source is the first/second motor multi-speed 0, multi-speed 1 to 15, or jogging frequency, the "Output frequency setting or motor [F001]" parameter can be used to change the frequency command. A setting change with the [F001] also changes the value of the selected frequency input source parameter.
  (For example, if the frequency input source is set to "Multi-speed 1 [A021]", the [A021] setting is displayed in [F001]. If [F001] is changed, this is also reflected in [A021].)
- When the frequency input source is an analog input or Modbus communication, [F001] is used to monitor the output frequency command value.

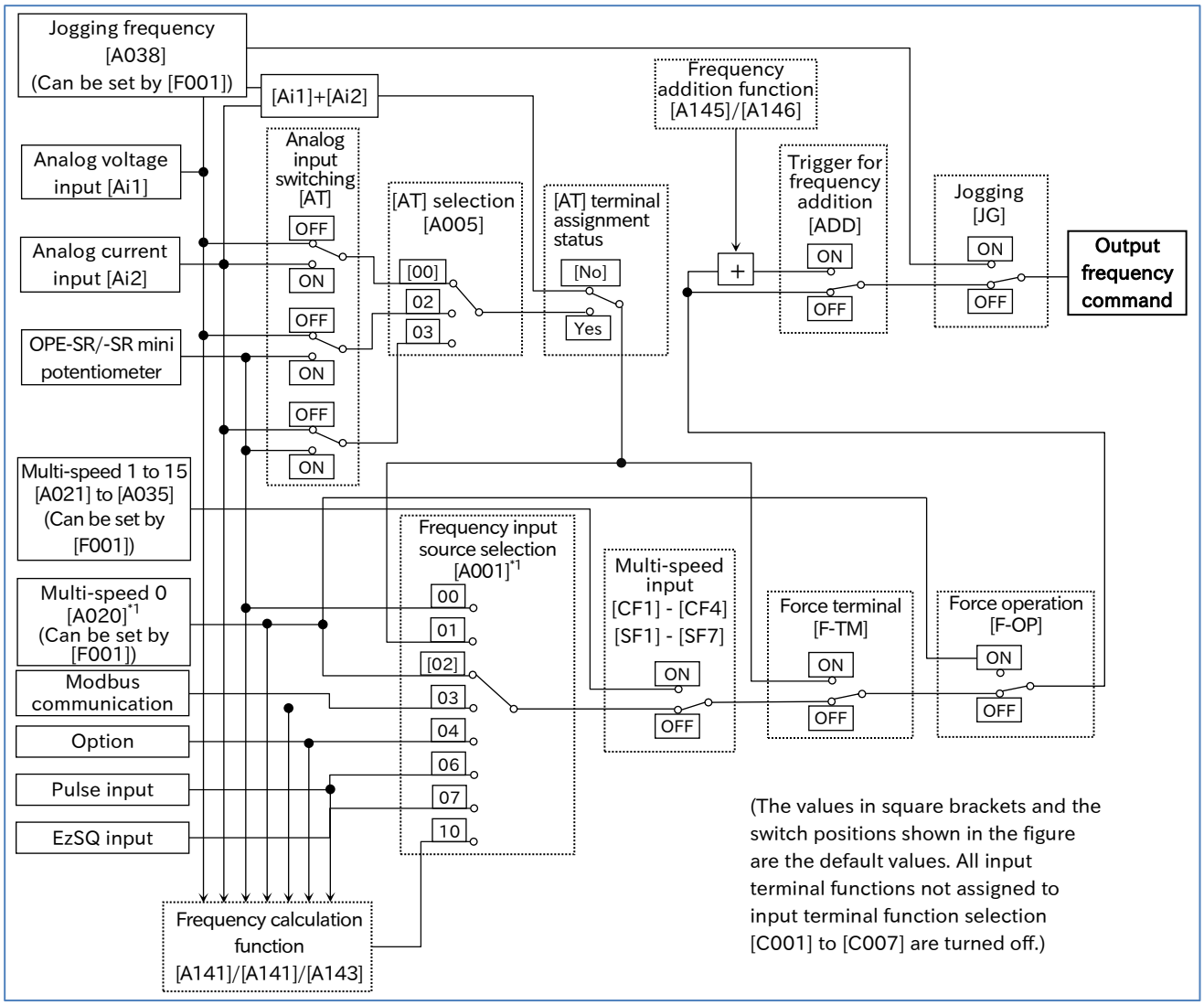


*1. "2nd-motor control [SET]" target parameter. The second control parameter is also subject to setting.

A

- The following table shows the details of the frequency input sources that can be selected with the "Frequency input source selection [A001][*1]".

| Overview of frequency command input sources | Data |
|---|---|
| When the optional remote operator with potentiometer (OPE-SR/OPE-SR mini) is connected, the frequency command is set using the potentiometer [POT]. | 00 |
| The frequency command is set using analog input on the control terminal [Ai1]/[Ai2] terminals. | 01 |
| The frequency command is set according to the [F001] setting using the keypad or remote operator. | 02 |
| The frequency command is set using Modbus communication. | 03 |
| The frequency command is set using communication via an option board that is installed separately. | 04 |
| The frequency command is set using pulse input from the control terminal [PLA] terminal. | 06 |
| The frequency command is set according to the <SET-Freq> reserved variable in the EzSQ program. | 07 |
| The frequency command is set according to the results of the frequency calculation function. | 10 |

!

- Other command input sources can also be selected even when using RS485 (Modbus communication, EzCOM function) or a program operation function EzSQ.
- When issuing a RUN command from the Inverter configuration software ProDriveNext, "Frequency input source selection [A001][*1]" = "Parameter setting (02)" and "RUN command input source selection [A002][*1]" = "Modbus communication (03)" are forcibly written when the operation screen is opened. When the operation screen is closed, these values return to the original values.

*1. "2nd-motor control [SET]" target parameter. The second control parameter is also subject to setting.

## 9.2.2 Setting Frequency Command by Keypad

Q

- How to set the frequency command from the keypad during a test run or normal operation?
- How to change the frequency command from an optional remote operator?
- How to change the frequency command while watching the monitor display?

A

- To set the output frequency command from the keypad according to a parameter setting, set the "Frequency input source selection [A001][*1]" to "Parameter setting (02)".
- The output frequency is set according to the "Output frequency setting or monitor [F001]" or the "Multi-speed 0 [A020][*1]". (If [F001] is changed, [A020] is also changed to the same value. If "2nd-motor control [SET]" is turned on, "Multi-speed 0, 2nd-motor [A220]" is changed.)
- To connect the optional remote operator with potentiometer (OPE-SR/OPE-SR mini) and use its potentiometer [POT] to set the output frequency command, set the "Frequency input source selection [A001][*1]" to "External operator POT (00)".
  Refer to "7.2.8 Remote Operator Functions" for details regarding operation when a remote operator is connected.

| Code | Item | Description | Data |
|---|---|---|---|
| [F001] | Output frequency setting or monitor | This parameter is used when setting the output frequency from the keypad.<br>If [F001] is changed, [A020][*1] will also be changed. | 0.00,<br>Minimum frequency to Maximum frequency (Hz) |
| [A001][*1] | Frequency input source selection | The output frequency command is set using the potentiometer [POT] on the remote operator (OPE-SR/OPE-SR mini). | 00 |
| | | The output frequency is set from the keypad according to a parameter setting. The output frequency value is set according to parameters [F001] or [A020][*1]. | 02 |
| [A020][*1] | Multi-speed 0 | Used when setting the output frequency from the keypad. | 0.00,<br>Minimum frequency to Maximum frequency (Hz) |
| [C021]<br>[C022]<br>[C026] | Output terminal function | Frequency reference by keypad [FREF]:<br>Turns on when the output frequency command can be set from the keypad. | 58 |

!

- When the "Multi-speed ([CF1] to [CF4])", "Multi-speed Bit ([SF1] to [SF7])", "Jogging [JG]", "Force operation [F-OP]", or "Force terminal [F-TM]" input terminal functions are on, those frequency commands are given priority regardless of the "Frequency input source selection [A001][*1]" setting. Please note that changing parameter [F001] while any of these functions are on will also change the frequency command setting parameter of each function.
- When "Frequency input source selection [A001][*1]" is set to "Parameter setting (02)" and "Enable frequency changes through monitor display [b163]" is set to "Enable (01)", the frequency command can be changed using "Output frequency monitor [d001]" or "Output frequency scale conversion monitor [d007]". For details, refer to "10.1.1 Monitor the Output Frequency".

*1. "2nd-motor control [SET]" target parameter. The second control parameter is also subject to setting.

## 9.2.3 Setting Frequency Command by Analog Inputs (Voltage/Current)

Q

- How to input a frequency command from an external device according to a voltage or current input signal?
- How to connect a variable resistor (potentiometer) to change the frequency command?

A

- To set the output frequency command according to an analog voltage input (0 to 10 VDC) using the [Ai1] terminal or an analog current input (4 to 20 mA) from the [Ai2] terminal of the control terminal, set the "Frequency input source selection [A001][*1]" to "Control terminal (01)". When this is done, "Output frequency setting or monitor [F001]" acts as the output frequency command monitor.
- If the "Analog input switching [AT]" input terminal is not assigned, the [Ai1] voltage input + [Ai2] current input acts as the frequency command.
- If the [AT] terminal is assigned, the "[AT] selection [A005]" parameter can be set so that it switches between any combination of pairs of inputs that may consist of the [Ai1] voltage input, the [Ai2] current input, or the optional remote operator (OPE-SR/OPE-SR mini) potentiometer [POT] as shown below. Therefore, when using only [Ai1] voltage input or [Ai2] current input, either short-circuit one of the [Ai1]/[Ai2] terminals to the [L] terminal, or assign the [AT] terminal according to the settings shown in the table below.

!

- The inverters are adjusted upon shipment so that a 9.8 VDC or a 19.8 mA input from the [Ai1]/[Ai2] terminals is the full scale of the command input (the maximum frequency setting for frequency command). This can be fine-tuned as necessary. For details regarding adjustment, refer to "9.15.3 Adjusting the Analog Input".

| Code | Item | Description | | Data |
|---|---|---|---|---|
| [A001][*1] | Frequency input source selection | The output frequency command is set according to the [Ai1] voltage input (0 to 10 VDC) or [Ai2] current input (4 to 20 mA) signal from the control circuit terminal block. | | 01 |
| [A005] | [AT] selection | The frequency command input source is switched by turning the [AT] input terminal on and off. | [AT] OFF: [Ai1] voltage input<br>[AT] ON: [Ai2] current input | 00 |
| | | | [AT] OFF: [Ai1] voltage input<br>[AT] ON: Remote operator potentiometer [POT] | 02 |
| | | | [AT] OFF: [Ai2] current input<br>[AT] ON: Remote operator potentiometer [POT] | 03 |
| [C001] to [C007] | Input terminal function | Analog input switching [AT]:<br>When the frequency command input source is an analog input from the control terminal, the [A005] setting and the [AT] input terminal ON/OFF setting allow you to switch between any combination of pairs of inputs that may consist of the [Ai1] voltage input, the [Ai2] current input, or the remote operator potentiometer [POT]. | | 16 |

*1. "2nd-motor control [SET]" target parameter. The second control parameter is also subject to setting.

## (Example 1) Voltage input from [Ai1] (using a potentiometer), no [AT] terminal assignment

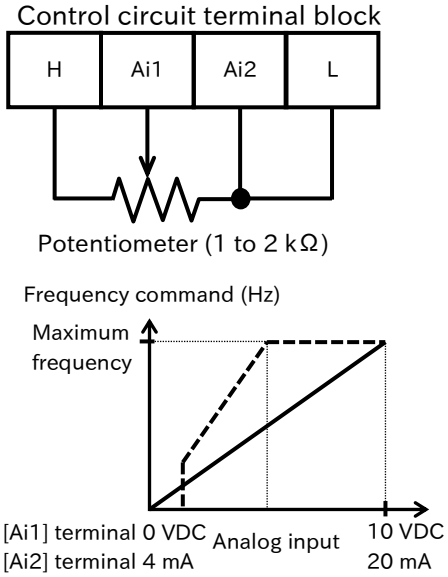


- If the [AT] terminal is not assigned, [Ai1] + [Ai2] will act as the frequency command.
- As shown in the figure to the left, when issuing a frequency command consisting of a 0 to 10 VDC voltage input from the [Ai1] terminal, short-circuit the [Ai2] terminal to the [L] terminal to prevent it from being exposed to electrical noise.
  (* When using current input from the [Ai2] terminal, be sure to short-circuit the [Ai1] terminal to the [L] terminal.)
- The default setting is 0 to 10 VDC and 4 to 20 mA analog input to represent values from zero to the maximum frequency (Hz). (Straight line on the graph shown on the left.)
- As represented by the dashed line on the graph shown on the left, you can use the analog input start/end function to change the relationship between the analog input value and the frequency command value. For details, refer to "9.15.3 Adjusting the Analog Input".

## (Example 2) Using the [AT] terminal to switch between [Ai1] voltage input and [Ai2] current input

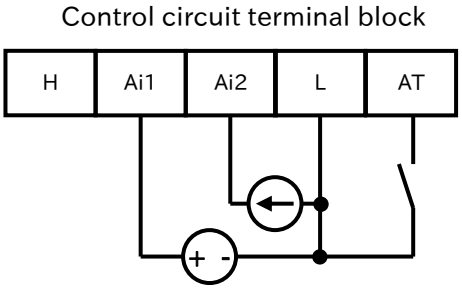


- Connect a device such as an analog output module with a 0 to 10 VDC voltage input to [Ai1] or 4 to 20 mA current input to [Ai2].
- Assign the [AT] input terminal to one of the input terminals [1] to [7] and set the "[AT] selection [A005]" parameter to "00".

| [A005] | 00 |
|---|---|
| Any parameter from [C001] to [C007] | 16 |
| [AT] terminal | OFF: [Ai1] voltage input |
| | ON: [Ai2] current input |

- The default state is 0 to 10 VDC and 4 to 20 mA analog input to represent values from zero to the maximum frequency (Hz).
- You can use the analog input start/end function to change the relationship between the analog input value and the frequency command value. For details, refer to "9.15.3 Adjusting the Analog Input".

## (Example 3) Using the [AT] terminal to switch between [Ai1] voltage input and the remote operator potentiometer [POT]

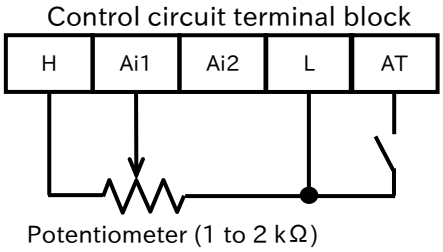


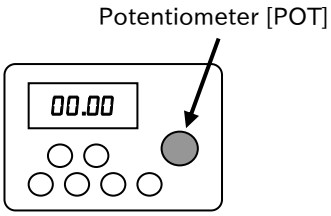


Remote operator with potentiometer
OPE-SR/OPE-SRmini

- Connect a device such as an analog output module with a voltage operating range of 0 to 10 VDC to [Ai1].
- Assign the [AT] input terminal to one of the input terminals [1] to [7] and set the "[AT] selection [A005]" parameter to "02".

| [A005] | 02 |
|---|---|
| Any parameter from [C001] to [C007] | 16 |
| [AT] terminal | OFF:[Ai1] voltage input |
| | ON: Remote operator potentiometer [POT] |

- The default state is 0 to 10 VDC to represent values from zero to the maximum frequency (Hz).
- For more details regarding how to change the relationship between the analog input value and the frequency command value, refer to "9.15.3 Adjusting the Analog Input".

## (Example 4) Using the [AT] terminal to switch between [Ai2] current input and the remote operator potentiometer [POT]

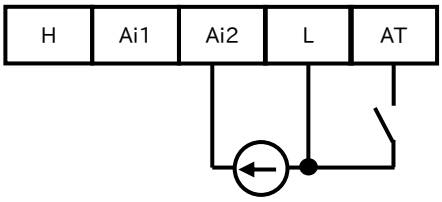


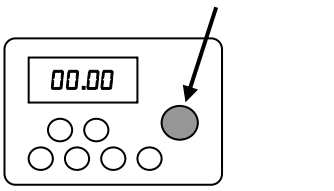


Remote operator with potentiometer
OPE-SR/OPE-SRmini

- Connect a device such as an analog output module with a current operating range of 4 to 20 mA to [Ai2].
- Assign the [AT] input terminal to one of the input terminals [1] to [7] and set the "[AT] selection [A005]" parameter to "03".

| [A005] | 03 |
|---|---|
| Any parameter from [C001] to [C007] | 16 |
| [AT] terminal | OFF: [Ai1] current input |
| | ON: Remote operator potentiometer [POT] |

- The default state is 4 to 20 mA to represent values from zero to the maximum frequency (Hz).
- For more details regarding how to change the relationship between the analog input value and the frequency command value, refer to "9.15.3 Adjusting the Analog Input".

## 9.2.4 Setting Frequency Command by Multi-Speed Operation Function

Q

- How to perform multi-speed switching of the frequency command by turning the I/O input signal on and off?

A

- The multi-speed operation function allows you to switch between multiple pre-set frequency commands according to the ON/OFF pattern sent to the [CF1] to [CF4] input terminals or the [SF1] to [SF7] input terminals.
- When multi-speed 1 to 15 is selected, priority is given to the multi-speed command regardless of the "Frequency input source selection [A001][*1]" setting. Please note that when multiple settings are turned on, the frequency command for each input terminal function is selected with the following order or priority: "Force terminal [F-TM] (51)", "Force operation [F-OP] (31)" and then "Jogging [JG] (06)".
- The following two modes can be selected for the multi-speed operation function according to the setting of the "Multi-speed operation selection [A019]".
  - Binary operation mode: Switches between up to 16 different speeds from 0 to 15 according to the particular ON/OFF pattern of the four input terminals from [CF1] to [CF4].
  - Bit operation mode: Switches between up to eight different speeds from 0 to 7 according to which of the seven input terminals from [SF1] to [SF7] is turned on.

!

- When all multi-speed input terminals [CF1] to [CF4] and [SF1] to [SF7] are off, speed 0 operates at the frequency command value set by the "Frequency input source selection [A001][*1]".

| Code | Item | Description | Data |
|---|---|---|---|
| [F001] | Output frequency setting or monitor | Changes the value of the currently selected multi-speed setting.<br>(For example, when set to multi-speed 2, as soon as [F001] is changed, [A022] is also changed to the same value.) | 0.00,<br>Minimum frequency to Maximum frequency (Hz)) |
| [A019] | Multi-speed selection | Binary operation mode with up to 16 speeds | 00 |
| | | Bit operation mode with up to eight speeds | 01 |
| [A020][*1] | Multi-speed 0 | Multi-speed 0 setting which is selected when the "Frequency input source selection [A001][*1]" is set to "Parameter setting(02)". | 0.00,<br>Minimum frequency to Maximum frequency (Hz) |
| [A021] to [A035] | Multi-speed 1 to 15 | Multi-speed 1 to 15 setting. | 0.00,<br>Minimum frequency to Maximum frequency (Hz) |
| [C001] to [C007] | Input terminal function | Multi-speed selection 1 to 4 ([CF1] to [CF4]):<br>These are the multi-speed input terminals for binary operation (up to 16 speeds). | 02 to 05 |
| | | Multi-speed Bit-1 to 7 ([SF1] to [SF7]):<br>These are the multi-speed input terminals for bit operation (up to eight speeds). | 32 to 38 |
| [C169] | Multistage input determination time | Time required to confirm the output frequency command when multi-speed switching is performed. | 0 to 200 (× 10 ms) |

*1. "2nd-motor control [SET]" target parameter. The second control parameter is also subject to setting.

## A Binary operation mode (commands for up to 16 speeds: [A019] = 00)

- By assigning "Multi-speed selection [CF1] to [CF4]" to "Input terminal function [C001] to [C007]", it is possible to switch between multi-speed settings 0 to 15.

### Binary operation mode control table

| Multi-speed | CF4 | CF3 | CF2 | CF1 | Frequency setting parameter |
|---|---|---|---|---|---|
| 0 | OFF | OFF | OFF | OFF | [A020][*1*2] |
| 1 | OFF | OFF | OFF | ON | [A021] |
| 2 | OFF | OFF | ON | OFF | [A022] |
| 3 | OFF | OFF | ON | ON | [A023] |
| 4 | OFF | ON | OFF | OFF | [A024] |
| 5 | OFF | ON | OFF | ON | [A025] |
| 6 | OFF | ON | ON | OFF | [A026] |
| 7 | OFF | ON | ON | ON | [A027] |
| 8 | ON | OFF | OFF | OFF | [A028] |
| 9 | ON | OFF | OFF | ON | [A029] |
| 10 | ON | OFF | ON | OFF | [A030] |
| 11 | ON | OFF | ON | ON | [A031] |
| 12 | ON | ON | OFF | OFF | [A032] |
| 13 | ON | ON | OFF | ON | [A033] |
| 14 | ON | ON | ON | OFF | [A034] |
| 15 | ON | ON | ON | ON | [A035] |

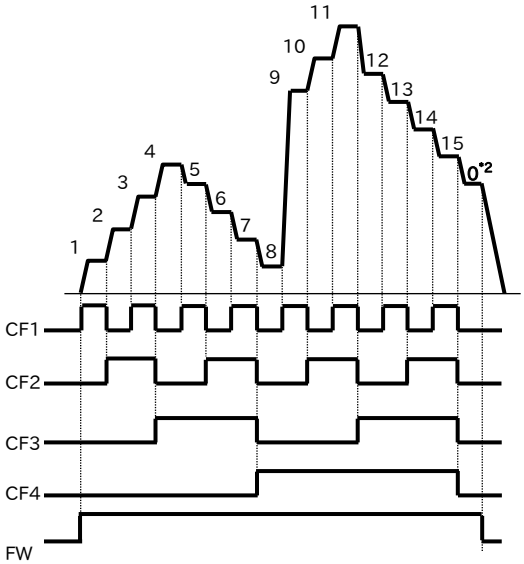


### Example of using binary operation mode

In this example, [C006] = "Multi speed selection 1 [CF1]" and [C007] = "Multi speed selection 2 [CF2]", while [CF3] and [CF4] are unassigned. At this time, if only input terminal [7] ([CF2]) is

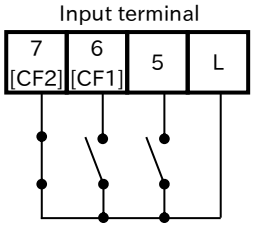


| Multi-speed | CF4 | CF3 | CF2 | CF1 |
|---|---|---|---|---|
| 1 | OFF | OFF | OFF | ON |
| 2 | OFF | OFF | ON | OFF |
| 3 | OFF | OFF | ON | ON |

- When using binary operation, the wait time until the multi-speed level is determined can be set with the "Multistage input determination time [C169]". This prevents the frequency command signal from accidentally representing an incorrect speed level when switching multi-speed terminals.
- After the last rising/falling edge input to the multi-speed terminal, the multi-speed command is determined after the [C169] set time has elapsed. Please note that increasing the determination time results in slower input response.

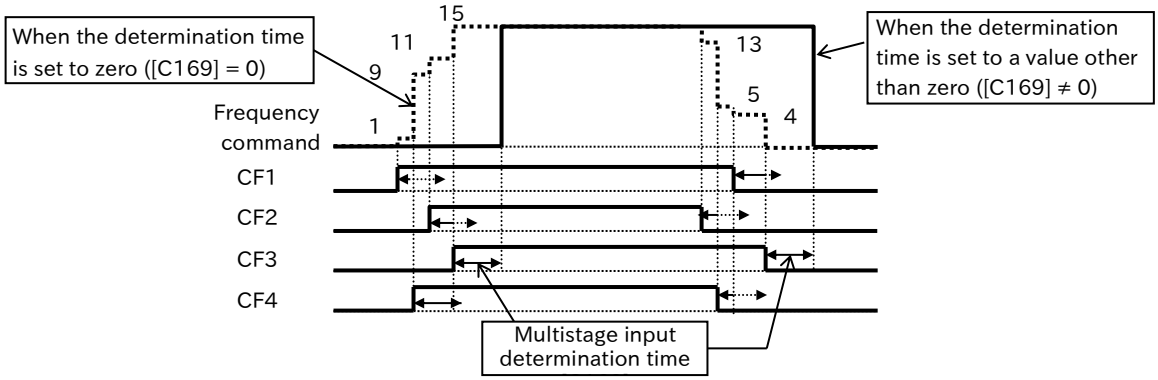


*1 "2nd-motor control [SET]" target parameter. The second control parameter is also subject to setting.
*2 Multi-speed 0 is the frequency command set by the "Frequency input source selection [A001][*1]" parameter.

## A Bit operation mode (command for up to eight speeds: [A019] = 01)

- By assigning "Multi-speed Bit [SF1] to [SF7]" to "Input terminal function [C001] to [C007]", it is possible to switch between multi-speed settings 0 to 7.

!

- When multiple multi-speed bit terminals are turned on simultaneously, the one with the lowest number is given priority.
- In the cells marked with an "x" in the table below, the on/off state of the terminal is ignored.

### Bit operation mode control table

| Multi-speed | SF7 | SF6 | SF5 | SF4 | SF3 | SF2 | SF1 | Frequency setting parameter |
|---|---|---|---|---|---|---|---|---|
| 0 | OFF | OFF | OFF | OFF | OFF | OFF | OFF | [A020][*1*2] |
| 1 | x | x | x | x | x | x | ON | [A021] |
| 2 | x | x | x | x | x | ON | OFF | [A022] |
| 3 | x | x | x | x | ON | OFF | OFF | [A023] |
| 4 | x | x | x | ON | OFF | OFF | OFF | [A024] |
| 5 | x | x | ON | OFF | OFF | OFF | OFF | [A025] |
| 6 | x | ON | OFF | OFF | OFF | OFF | OFF | [A026] |
| 7 | ON | OFF | OFF | OFF | OFF | OFF | OFF | [A027] |

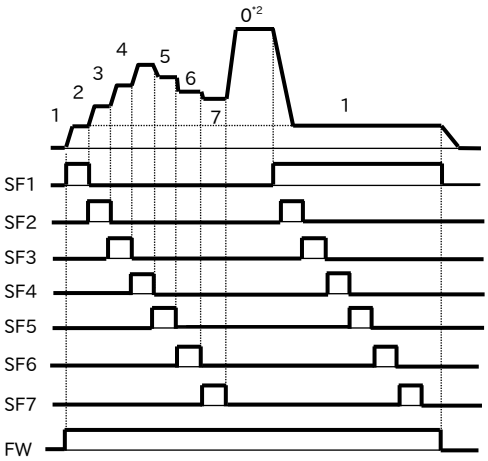


### Example of using bit operation mode (when multi-speed 3 is selected)

In this example, [C005] = "Multi-speed Bit 1 [SF1]", [C006] = "Multi-speed Bit 2 [SF2]", and [C007] = "Multi-speed Bit 3 [SF3]", while [SF4] to [SF7] are unassigned. If only input terminal 7 ([SF3]) is turned on, it corresponds with multi-speed 3, and "Output frequency setting or monitor [F001]" displays the "Multi-speed 3 [A023]" setting value.

Input terminal

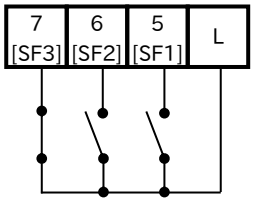


| Multi-speed | SF7 | SF6 | SF5 | SF4 | SF3 | SF2 | SF1 |
|---|---|---|---|---|---|---|---|
| 1 | x | x | x | x | x | x | ON |
| 2 | x | x | x | x | x | ON | OFF |
| 3 | x | x | x | x | ON | OFF | OFF |

*1 "2nd-motor control [SET]" target parameter. The second control parameter is also subject to setting.
*2 Multi-speed 0 is the frequency command set by the "Frequency input source selection [A001][*1]".

## 9.2.5 Setting Frequency Command for Jogging and Inching Operation

**Q**

- How to drive the motor in short discrete steps?
- How to perform inching?

**A**

- Jogging operation allows positioning and fine adjustments while the motor is stopped.
- After the "Jogging [JG]" input terminal is turned on, jogging operation can be started by giving the RUN command.

**!**

- During jogging operation, a frequency command is set according to the "Jogging frequency [A038]" setting without including an acceleration time. This can easily lead to issue such as an overcurrent trip. Be sure to appropriately adjust the [A038] to avoid a trip.
- Jogging operation is given priority over "Frequency input source selection [A001][*1]", "Multi-speed [CF1] to [CF4]/[SF1] to [SF7] (02 to 05/32 to 38)", "Force terminal [F-TM] (51)", and "Force operation [F-OP] (31)".

| Code | Item | Description | Data |
|---|---|---|---|
| [A038] | Jogging frequency | Sets the frequency command value during jogging. | Minimum frequency to 10.00 (Hz) |
| [A039] | Jogging stop mode selection | Disable during operation, free run when stopped[*2] | 00 |
| | | Disable during operation, deceleration stop when stopped | 01 |
| | | Disable during operation, DC braking when stopped[*3] | 02 |
| | | Enable during operation, free run when stopped[*2] | 03 |
| | | Enable during operation, deceleration stop when stopped | 04 |
| | | Enable during operation, DC braking when stopped[*3] | 05 |
| [C001] to [C007] | Input terminal function | Jogging [JG]:<br>After this terminal is turned on, jogging operation starts once the RUN command is on. | 06 |

*1. "2nd-motor control [SET]" target parameter. The second control parameter is also subject to setting.
*2. If "Jogging stop mode selection [A039]" is set to "Free run at jogging stop (00, 03)", the free run operation settings are required. For details, refer to "9.7.6 Starting after Free Run Stop".
*3. If "Jogging stop mode selection [A039]" is set to "DC braking at jogging stop (02, 05)", the DC braking settings are required. For details, refer to "9.7.8 Stopping with DC Braking".

### Disabling jogging during operation ([A039] = "Disable at run (00, 01, 02)")

- When "Jogging stop mode selection [A039]" is set to "Disable at run (00, 01, 02)", jogging cannot be performed if the RUN command has been turned on first.

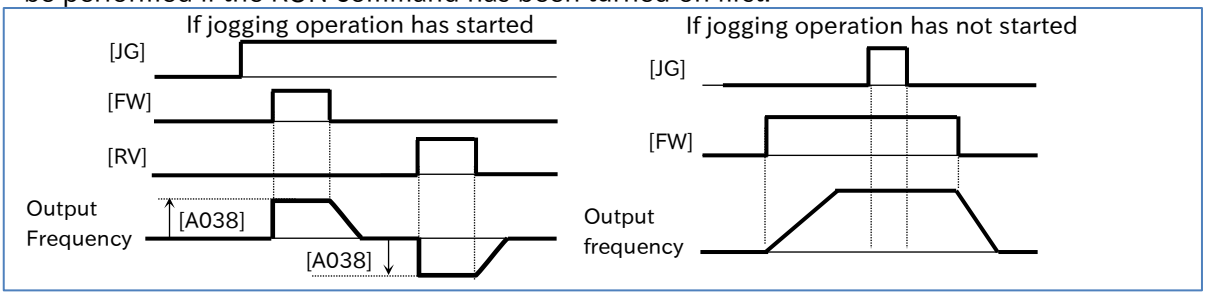


### Enabling jogging during operation ([A039] = "Enable at run (03, 04, 05)")

- When "Jogging stop mode selection [A039]" is set to "Enable at run (03, 04, 05)", jogging can be performed even if the RUN command has been turned on first. However, if the [JG] terminal is turned off first, a free-run stop is performed.

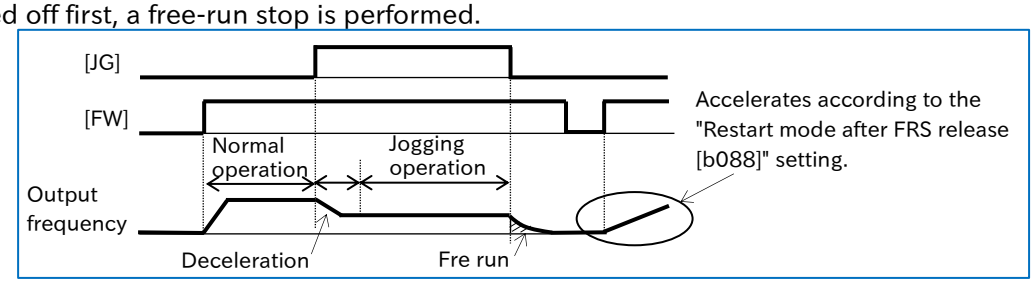

## 9.2.6 Setting Frequency Command by Modbus-RTU Communication (RS485 Communication)

Q

- How to set the frequency command using Modbus-RTU communication (RS485 communication)?

A

- To set the output frequency command using Modbus-RTU communication (RS485 communication), set the "Frequency input source selection [A001][*1]" to "Modbus communication (03)".
- For details regarding Modbus communication, refer to "Chapter 11 RS485 Communication".

| Code | Item | Description | Data |
|---|---|---|---|
| [A001][*1] | Frequency input source selection | Sets the output frequency commands using Modbus-RTU communication (RS485 communication). | 03 |

*1. "2nd-motor control [SET]" target parameter. The second control parameter is also subject to setting.

## 9.2.7 Setting Frequency Command by Communication Option Board

Q

- How to set the frequency command using a communication option board?

A

- To set the output frequency command using a communication option board, set the "Frequency input source selection [A001][*1]" parameter to "Option (04)".
- For details regarding setting frequency command from a communication option board, refer to the instruction manual or user's guide for each option. For each guide, please contact the supplier where this device was purchased or local Hitachi inverter sales office.

| Code | Item | Description | Data |
|---|---|---|---|
| [A001][*1] | Frequency input source selection | Sets the output frequency command using a communication option board. | 04 |

*1. "2nd-motor control [SET]" target parameter. The second control parameter is also subject to setting.

## 9.2.8 Setting Frequency Command by Pulse Input

**Q**

- How to set the frequency command using an open collector pulse input?

**A**

- To set the output frequency command using a pulse input from the [PLA] terminal, set the "Frequency input source selection [A001][*1]" to "Pulse input (06)". At the same time, set the "Pulse input, target function selection [P003]" to "Pulse input frequency command (00)" and the "Simple positioning selection [P012]" to "Simple positioning disabled (00)".
- Set the input pulse frequency, that makes the frequency command equivalent to the "Maximum frequency [A004][*1]", in the "Pulse frequency scale [P055]".
- The pulse input value can be monitored using "Pulse input [PLA] monitor [d133]".

**!**

- The analog input start/end function cannot be used. To limit the pulse input frequency command, set the "Pulse frequency bias value [P057]", the "Pulse upper frequency detection level [P058]", and the "Pulse lower frequency detection level [P059]".
- Trying to stop the inverter by setting the pulse input frequency to 0 Hz may cause the deceleration to stall. In such a case, turn off the RUN command to stop the inverter.
- If the pulse input frequency falls to or below the "Pulse lower frequency detection level [P059]", it is treated as if the input is set to 0 Hz.
- If the "Pulse lower frequency detection level [P059]" setting is too high, start-up may be too slow.

| Code | Item | Description | Data |
|---|---|---|---|
| [d133] | Pulse input [PLA] monitor | Monitors the pulse frequency from the [PLA] terminal as a percentage with [P055] indicating a value of 100%. This monitor continuously operates regardless of all other settings. | 0.00 to 100.00 (%) |
| [A001][*1] | Frequency input source selection | Used to set the pulse input as the frequency command input source. | 06 |
| [P003] | Pulse input, target function selection | Used to set the pulse input as the frequency command input source. | 00 |
| [P012] | Simple positioning selection | Used to set the pulse input as the frequency command input source. | 00 |
| [P055] | Pulse frequency scale | Enter the pulse frequency that is equivalent to the maximum frequency. | 1.0 to 32.0 (kHz) |
| [P056] | Pulse frequency filter time constant | Filters the pulse frequency input. | 0.01 to 2.00 (s) |
| [P057] | Pulse frequency bias value | Applies a bias to the pulse frequency input. | -100 to 100 (%) |
| [P058] | Pulse upper frequency detection level | Limits the output of the pulse frequency input. | 0 to 100 (%) |
| [P059] | Pulse lower frequency detection level | Sets the pulse value to 0.0% when the output of the pulse frequency input falls to or below the set lower limit. | 0.01 to 20.00 (%) |

### ■ Pulse command frequency processing block diagram

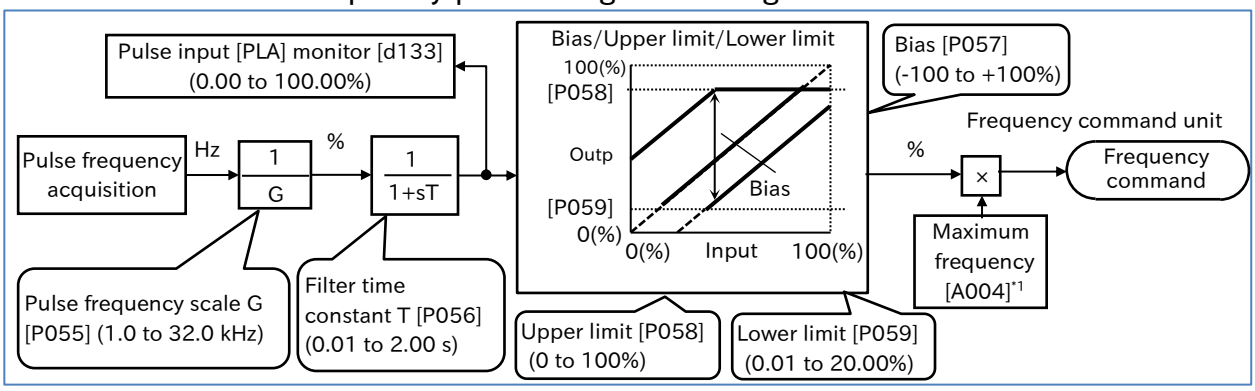


*1. "2nd-motor control [SET]" target parameter. The second control parameter is also subject to setting.

## 9.2.9 Setting Frequency Command by Program Operation Function EzSQ

Q

- How to set the frequency command from a program created with the program operation function EzSQ?

A

- To set the output frequency command using the program operation function EzSQ, set the "Frequency input source selection [A001][*1]" to "Program function (EzSQ) (07)". This allows frequency command to be set at any time according to <SET-Freq> reserved variable within an EzSQ program.
- The "EzSQ enable selection [A017]" setting can be changed to select whether the EzSQ program is initiated when the inverter is turned on or when the "Program RUN [PRG] (82)" input terminal assigned to one of the input terminals [1] to [7] is turned on.
- For details regarding the program operation function EzSQ, refer to "12.2 Program Operation Function EzSQ".

!

- To create an EzSQ program and upload it to the inverter, the Inverter setting software ProDriveNext must be installed on a Windows PC.
- For details, refer to "Inverter configuration software ProDriveNext instruction manual (NT8001*X)" and "Easy-Sequence Function (EzSQ) Programming Guide (NT2021*X)". For each guide, please contact the supplier where this device was purchased or local Hitachi inverter sales office.

| Code | Item | Description | Data |
|---|---|---|---|
| [A001][*1] | Frequency input source selection | The output frequency command is set according to the <SET-Freq> reserved variable in the EzSQ program. | 07 |
| [A017] | EzSQ enable selection | The uploaded program is disabled. | 00 |
| | | The EzSQ program is initiated when the "Program RUN [PRG]" input terminal turns on. | 01 |
| | | The EzSQ program always runs after the inverter power is turned on. | 02 |

*1. "2nd-motor control [SET]" target parameter. The second control parameter is also subject to setting.

## 9.2.10 Setting Frequency Command by PID Control

Q

- How to use PID control for the fan and pump?
- How to use process control?

A

- When using the PID function, output frequency command is set according to PID calculation results. To enable this function, set the "PID enable [A071]" to "Enable (01)" or "Enable (with inverted output) (02)". Set the PID target value input source for the "Frequency input source selection [A001][*1]" and set the feedback input source for the "PID feedback input source selection [A076]".
  For details regarding the PID function, refer to "9.8 Driving by PID Process Control".

| Code | Item | Description | Data |
|---|---|---|---|
| [A001][*1] | Frequency input source selection | Sets the target value input source when the PID function is enabled. | 00 to 10 |
| [A071] | PID enable | Disable: The PID function is disabled. | 00 |
| | | Enable: The PID function is enabled. The PID calculation results only support forward rotation. | 01 |
| | | Enable: The PID function is enabled. Reverse rotation can also be performed according to the PID calculation results. | 02 |
| [A076] | PID feedback input source selection | Analog current input from the [Ai2] terminal | 00 |
| | | Analog voltage input from the [Ai1] terminal | 01 |
| | | Input from Modbus communication | 02 |
| | | Pulse frequency from the [PLA] terminal | 03 |
| | | Calculation function result | 10 |

*1. "2nd-motor control [SET]" target parameter. The second control parameter is also subject to setting.

## 9.2.11 Setting Frequency Command by Calculation Operation

**Q**

- How to multiply the frequency command by a particular gain value?
- How to set the frequency command according to the sum of two input values?
- How to switch between forward and reverse rotation by subtracting the frequency command?

**A**

- To use the result of the frequency calculation function as the output frequency command, set the "Frequency input source selection [A001][*1]" to "Calculation function result (10)".
- The frequency calculation function can also be used for the PID feedback input. In such a case, set the "PID feedback input source selection [A076]" to "Calculation function result (10)".

| Code | Item | Description | Data |
|---|---|---|---|
| [A001][*1] | Frequency input source selection | The calculation operation set in [A143] is performed on the input values from the command input sources set in [A141] and [A142]. The result of this calculation is then used as the output frequency command. | 10 |
| [A076] | PID feedback input source selection | The calculation operation set in [A143] is performed on the input values from the command input sources set in [A141] and [A142]. The result of this calculation is then used as the PID feedback value. | 10 |
| [A141]/ [A142] | Frequency input selection 1/2 for calculation function | Parameter setting ([A020][*1]) | 00 |
| | | Remote operator potentiometer [POT] | 01 |
| | | [Ai1] voltage input | 02 |
| | | [Ai2] current input | 03 |
| | | Modbus communication | 04 |
| | | Communication option board | 05 |
| | | Pulse input | 07 |
| [A143] | Calculation function operator selection | Addition: [A141] + [A142] | 00 |
| | | Subtraction: \| [A141] - [A142] \| (Absolute value) | 01 |
| | | Multiplication: [A141] × [A142] | 02 |

*1. "2nd-motor control [SET]" target parameter. The second control parameter is also subject to setting.

**!**

- "Remote control Speed-UP funtion [FUP]/Remote control Speed-DOWN function [FDN]" are disabled for the frequency calculation function. The frequency cannot be changed by the keys on the keypad while the "Output frequency monitor [d001]", "Output frequency scale conversion monitor [d007]", or "Output frequency setting or monitor [F001]" is displayed.
- The same setting can be applied to [A141] and [A142]. The multiplication operation can also be used to calculate the square of a command input source.

### Example of the frequency calculation function

(Example 1) Applying gain
[A141] = [Ai1] voltage input
[A142] = Parameter ([A020] = 3 Hz)
[A143] = Multiplication (02)

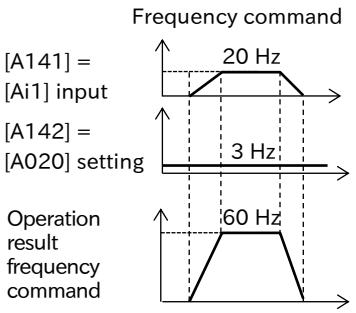


(Example 2) Addition
[A141] = [Ai1] voltage input
[A142] = [Ai2] current input
[A143] = Addition (00)

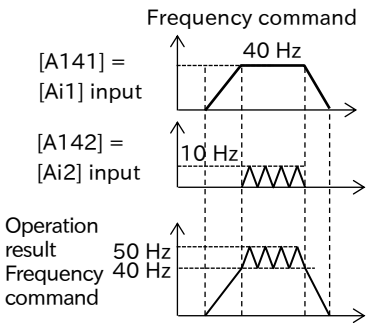


(Example 3) High-speed forward rotation and Low-speed reverse rotation
[A141] = [Ai1] voltage input
[A142] = Parameter ([A020] = 10 Hz)
[A143] = Subtraction (01)

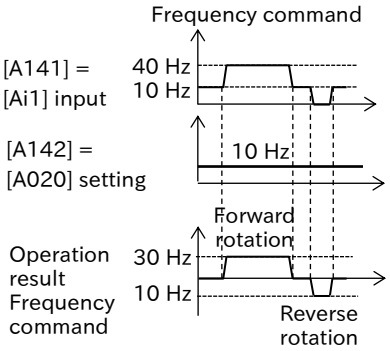

## 9.2.12 Temporarily Adding a Set Value to the Frequency Command

Q

- How to increase the motor frequency only upon I/O signal input?
- How to increase the operation speed of devices such as a conveyor by sending an I/O signal?
- How to temporarily raise the frequency to allow actions such as unblocking a clogged pump?

A

- When the "Trigger for frequency addition [ADD] (50)" input terminal is turned on, the frequency set in the "Add frequency [A145]" is added or subtracted to the output frequency command.
- Either addition or subtraction is selected according to the sign setting of the "Add frequency direction selection [A146]".

| Code | Item | Description | Data |
|---|---|---|---|
| [A145] | Add frequency | Sets the frequency to be added. | 0.00 to 590.00 (Hz) |
| [A146] | Add frequency direction selection | Frequency command + [A145] | 00 |
| | | Frequency command - [A145] | 01 |
| [C001] to [C007] | Input terminal function selection | Trigger for frequency addition [ADD]: When this terminal is turned on, [A145] is added to or subtracted from the frequency command. | 50 |

!

- Using "Trigger for frequency addition [ADD]" to increase the frequency can only be performed within a limited frequency range. Therefore, if the added value exceeds upper and lower limits or the maximum frequency setting, the frequency command will be limited.
- Using "Trigger for frequency addition [ADD]" to increase the frequency is disabled for the jogging function.
- When the "FUP/FDN data save enable [C101]" is set to "Save (01)", the frequency command value stored in the inverter memory don't include the frequency addition value set by "Trigger for frequency addition [ADD]". *1
- If the sign of the frequency command changes ("-" to "+" or "+" to "-") due to the calculation result, the direction of rotation is reversed.
- This function is also enabled for the PID target value. However, when the PID function is used, [A145] is displayed in increments of 0.01%, with the maximum frequency setting as 100%.

*1. For details, refer to "9.2.13 Increasing/Decreasing Frequency Command by Remote Control".

## 9.2.13 Increasing/Decreasing Frequency Command by Remote Control

**Q**

- How to increase or decrease the frequency command using an I/O input signal?
- How to increase or decrease the frequency command or PID target value using an external remote button?

**A**

### Remote control function ([FUP]/[FDN]/[UDC] input terminal function)

- The remote control function increases or decreases the currently used frequency command when the "Remote control Speed-UP function [FUP] (27)" or the "Remote control Speed-DOWN function [FDN] (28)" input terminals is turned on.
- This function is enabled when the frequency command input source is set to one of the following configurations. It cannot be used in the case of analog inputs or jogging command.
  - The "Frequency input source selection [A001][*1]" is set to "Parameter setting (02)".
  - The frequency command input source is a multi-speed operation function.
  - The "Frequency input source selection [A001][*1]" is set to the "Control terminal (01)" and the "Analog command holding [AHD] (65)" input terminal is on.
- Acceleration/Deceleration time when [FUP]/[FDN] is turned on are according to the settings of the "Acceleration time 1 setting or monitor [F002][*1]" and the "Deceleration time 1 setting or monitor [F003][*1]".
- If the "FUP/FDN data save enable [C101]" is set to "Save (01)", the frequency command value adjusted by the [FUP]/[FDN] is saved in the inverter memory when the inverter power is shut off or when the command input source is switched.
- When the "Remote control speed data clearing [UDC] (29)" input terminal is turned on, the frequency command value adjusted by the [FUP]/[FDN] is changed back to 0 Hz or the value originally saved before adjusted by the [FUP]/[FDN] according to the "FUP/FDN [UDC] terminal mode selection [C104]" setting.

| Code | Item | Description | Data |
|---|---|---|---|
| [C101] | FUP/FDN data save enable | Do not save:<br>The command frequency increased or decreased by the [FUP]/[FDN] function is not saved in the inverter memory when the power is shut off or the command input source is switched. | 00 |
| | | Save:<br>The command frequency increased or decreased by the [FUP]/[FDN] function is saved in the inverter memory when the power is shut off or the command input source is switched. | 01 |
| [C104] | FUP/FDN [UDC] terminal mode selection | 0 Hz:Cleared to 0 Hz. | 00 |
| | | Saved data:<br>Returns it to the saved data before [FUP]/[FDN] adjustment. | 01 |
| [C001] to [C007] | Input terminal function | Remote control Speed-UP function [FUP]:<br>When this terminal is turned on, the frequency command value is increased. | 27 |
| | | Remote control Speed-DOWN function [FDN]:<br>When this terminal is turned on, the frequency command value is decreased. | 28 |
| | | Remote control Speed data clearing [UDC]:<br>When this terminal is turned on, the frequency command value is cleared. When cleared, it returns to the value set in [C104]. | 29 |

**!**

- Do not turn on/off the [FUP]/[FDW] input terminals or operate the JOG dial on the keypad immediately after the power has been shut off. Doing so may result in the failure to properly save any frequency commands that were changed.
- When [C101] is set to "Save (01)", even if the [SET] key is not pressed after changing the frequency command values [A020][*1]/[A021] to [A035], [F001], and [d001]/[d007] ("Enable frequency changes through monitor display [b163]" function[*2]) by the JOG dial on the keypad, the changed values are automatically saved to the inverter memory when the power is shut off.

*1. "2nd-motor control [SET]" target parameter. The second control parameter is also subject to setting.

*2. For details, refer to "9.2.15 Setting Frequency Command on Frequency Monitor".

## [FUP]/[FDN] remote control function operation (when the frequency command is [F001])

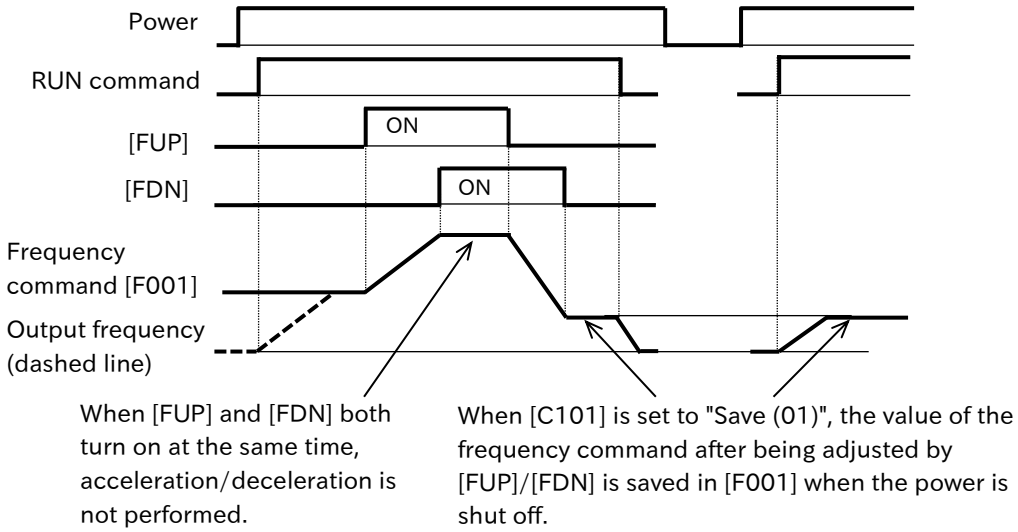


## Remote control speed data clearing [UDC] operation

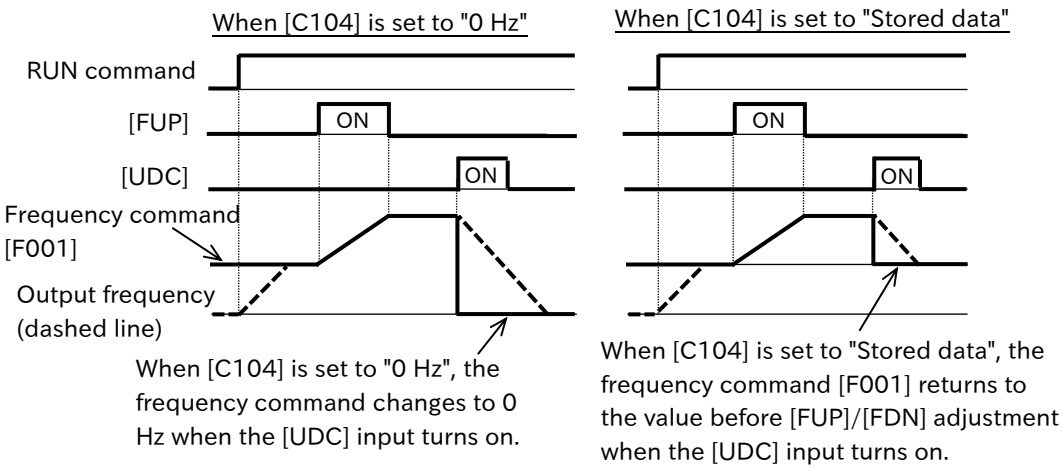

## A Analog command holding function ([AHD] input terminal function)

- The analog command holding function holds the frequency command value of the analog input when the "Analog command holding [AHD] (65)" input terminal turns on. The frequency command value returns to the analog input command value once this terminal is turned off.
- While the [AHD] input terminal is on, the frequency command value can be increased or decreased using the [FUP]/[FDN] function.
- When the "FUP/FDN data save enable [C101]" parameter is set to "Save (01)", the frequency command value adjusted by the [FUP]/[FDN] function is saved in the inverter memory as an "analog command holding frequency" when the power is shut off.

### Analog command holding function operation diagram (when using [AHD] and [UDC] with an analog frequency command)

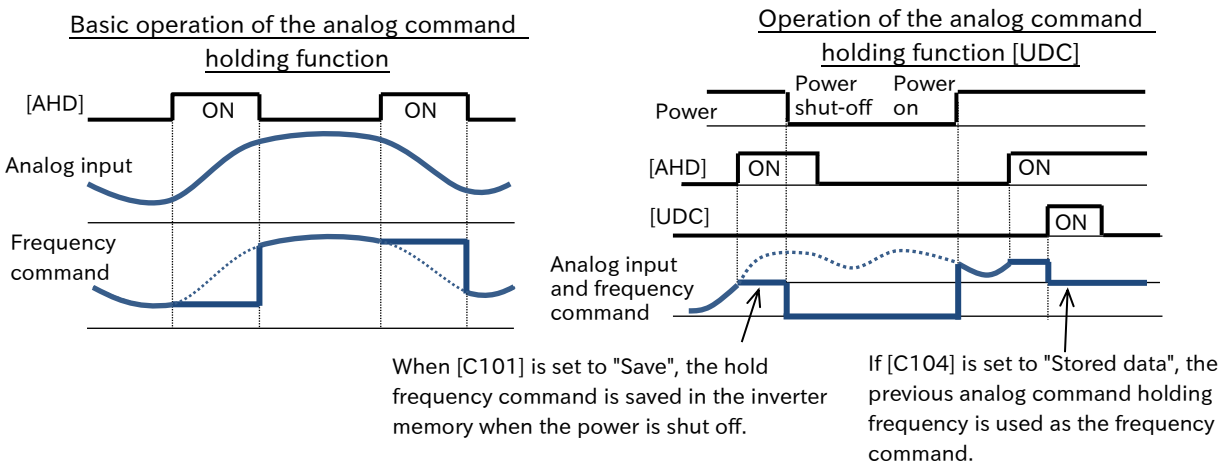


- If power is turned on or the "Reset [RS] (18)" input terminal is from on to off while [AHD] is on, the held data just before that point is used.
- If the system is switched between the first and second control by the "2nd-motor control [SET]" input terminal while [AHD] is turned on, the held analog input remains as the frequency command. To switch between first and second control, turn [AHD] off and then initiate the hold again.

## 9.2.14 Temporarily Changing the Frequency Command Input Source

**Q**

- How to temporarily switch the frequency command input source to the parameter setting by the keypad?
- How to temporarily switch the frequency command input source to an analog input from the control circuit terminal block?

**A**

- When the "Force operation [F-OP]" input terminal is turned on, the parameter setting is given priority over the "Frequency input source selection [A001][*1]" setting for the frequency command input source.
  For details, refer to "9.2.2 Setting Frequency Command by Keypad".
- When the "Force terminal [F-TM]" input terminal is turned on, the control circuit terminal analog input is given priority over the "Frequency input source selection [A001][*1]" setting for the frequency command input source.
  For details, refer to "9.2.3 Frequency Command by Analog Inputs (Voltage/Current)".

### Force operation [F-OP]/Force terminal [F-TM] operation

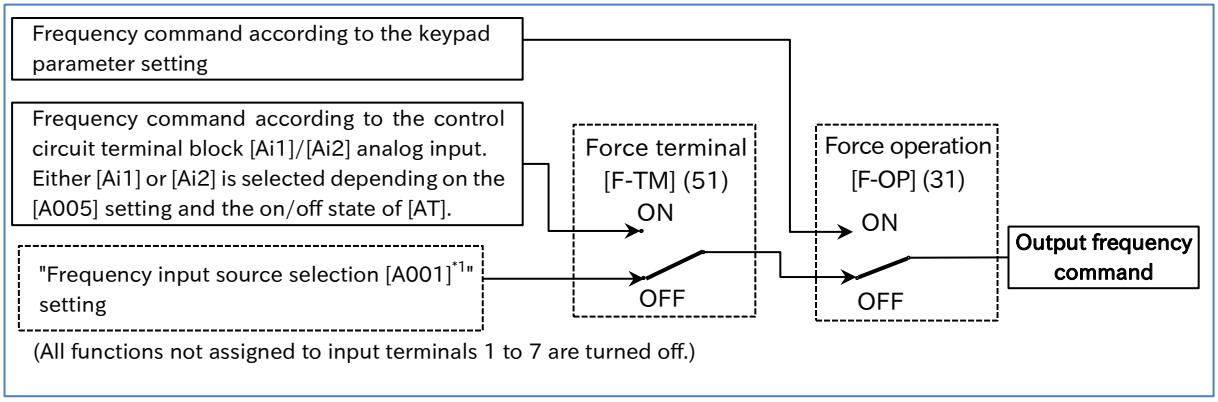


| Code | Item | Description | Data |
|---|---|---|---|
| [C001] to [C007] | Input terminal function | Force operation [F-OP] :<br>When [F-OP] terminal is turned on, RUN command and frequency input source are switched to the input from the keypad. | 31 |
| | | Force terminal [F-TM] :<br>When [F-TM] terminal is turned on, RUN command and frequency input source are switched to the input from the control terminal | 51 |

**!**

- When the [F-OP] or [F-TM] terminal is turned on, the RUN command input source also changes to the keypad RUN key or the control terminal I/O input signal. For details, refer to "9.1.7 Temporarily Changing RUN Command Input Source".
- When the [F-OP] or [F-TM] terminals are ON/OFF during inverter operation, the inverter will stop. To restart operation, the RUN command must be turned off and on again.
- If the [F-OP] and [F-TM] terminals are turned on simultaneously, the [F-OP] terminal is given priority.

1. "2nd-motor control [SET]" target parameter. The second control parameter is also subject to setting.

## 9.2.15 Setting Frequency Command on Frequency Monitor

Q

- How to adjust the frequency command by the keypad while monitoring the output frequency on the keypad?

A

- When the "Enable frequency changes through monitor display [b163]" is set to "Enable (01)" and the "Frequency command selection [A001][*1]" is set to "Parameter setting (02)", the frequency command can be changed by pressing keys on the keypad while "Output frequency monitor [d001]" or "Output frequency scale conversion monitor [d007]" is displayed as long as the inverter is running.
- After changing the frequency command, pressing the [SET] key saves the new frequency command value in the inverter memory.

| Code | Item | Description | Data |
|---|---|---|---|
| [d001] | Output frequency monitor | Displays the current output frequency. | 0.00 to 590.00 (Hz) |
| [d007] | Output frequency scale conversion monitor | Displays the value of [d001] × [b086][*2]. | 0.00 to 58994.10 |
| [b163] | Enable frequency changes through monitor display | Disabled:<br>The frequency command cannot be changed by [d001]/[d007]. | 00 |
| | | Enabled:<br>The frequency command can be changed by [d001]/[d007]. | 01 |

!

- Please note that if the "FUP/FDN data save enable [C101]" is set to "Save (01)", the frequency command value that was changed using [d001]/[d007] is saved in the inverter memory when the power is shut off.
- This function cannot be used during PID operation or when the inverter is stopped.
- Since this function overwrites the "Output frequency setting or monitor [F001]" setting while displaying [d001]/[d007], there may be a time discrepancy between the key operation and the display depending on the acceleration/deceleration time setting.

*1. "2nd-motor control [SET]" target parameter. The second control parameter is also subject to setting.
*2. For details, refer to "10.1.1 Monitor the Output Frequency".

# 9.3 Using Motor Acceleration/Deceleration Function

## 9.3.1 Changing the Acceleration/Deceleration Time

**Q**

- How to shorten the motor acceleration and make it more responsive?
- How to increase the acceleration time to prevent over current?
- How to increase the deceleration time to prevent overvoltage?
- How to slow down acceleration and deceleration to mitigate the large motor load inertia?

**A**

- Appropriately set the motor acceleration/deceleration time. Set them with a longer time for slow acceleration/deceleration or a shorter time for fast acceleration/deceleration.
- The acceleration/deceleration time are calculated according to the time it takes for the speed to rise from 0 Hz to the maximum frequency setting.
- The acceleration/deceleration time can also be changed during operation according to the commands of the two-stage acceleration/deceleration function. For details, refer to "9.3.2 Switching the Acceleration/Deceleration Time in Two Stages".
- The acceleration/deceleration curve selection ([A097]/[A098]) allows you to start with gradual acceleration/deceleration. For details, refer to "9.3.4 Changing the Acceleration/Deceleration Pattern".
- When the "Acceleration/Deceleration cancellation [LAC] (46)" input terminal turns on, the acceleration/deceleration time is set to zero seconds. In this case, the output frequency instantly responds to the changes in the frequency command. For details, refer to "9.3.5 Making the Frequency Instantaneously Follow the Command".

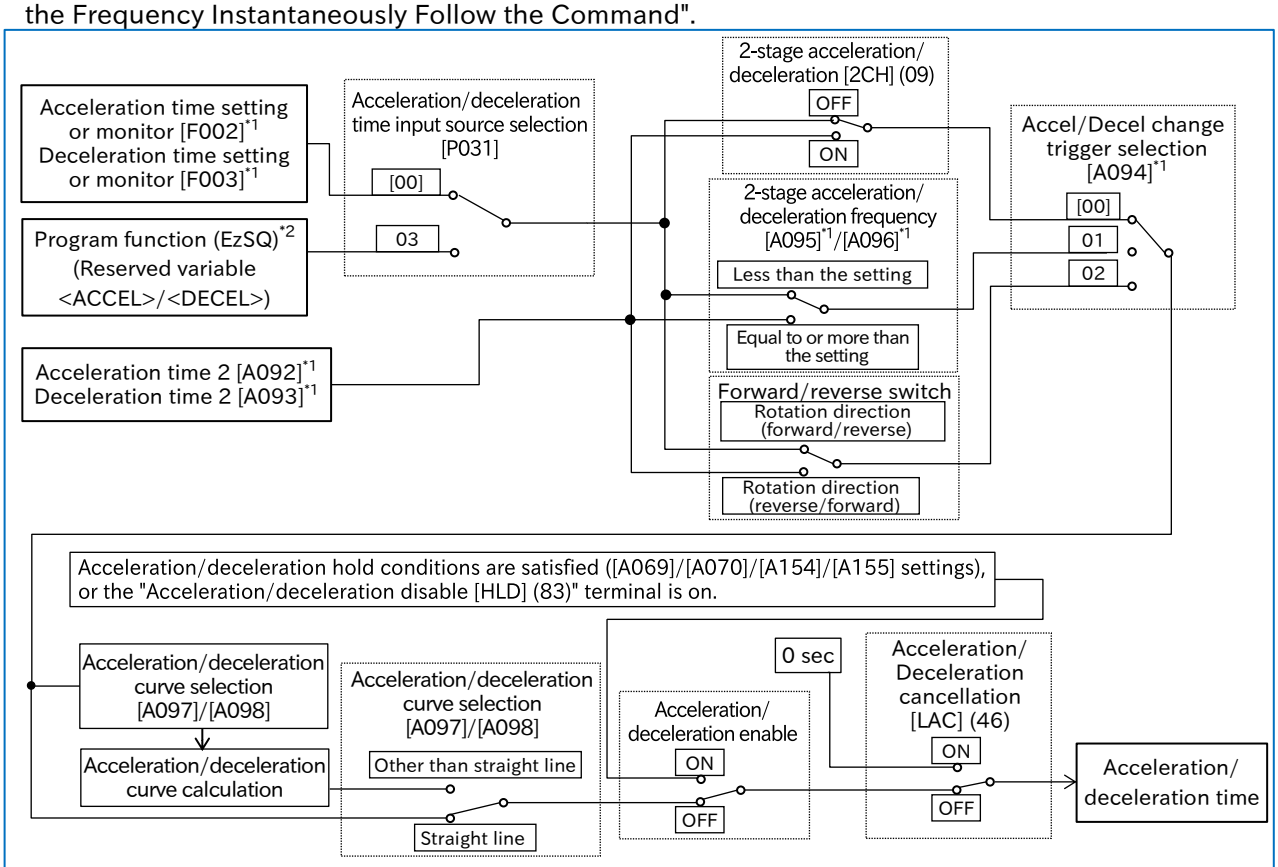


(The values in square brackets and the switch positions shown in the figure are the default values.
All input terminal functions not assigned to input terminal function selection [C001] to [C007] are turned off.)

**!**

- If the acceleration/deceleration hold function is turned on or off when the acceleration/deceleration pattern selection ([A097]/[A098]) is not set to a straight line, the acceleration/deceleration pattern is recalculated using the frequency command when the hold function is turned off as the starting point. Acceleration/deceleration is then performed again.

*1. "2nd-motor control [SET]" target parameter. The second control parameter is also subject to setting.
*2. The EzSQ reserved variable <ACCEL>/<DECEL> are enabled when [P031] = "EzSQ (03)".

## Actual behavior of acceleration/deceleration time settings

- Each acceleration/deceleration time parameter setting results in an acceleration/deceleration time that is calculated with respect to the entire range from 0 Hz to the maximum frequency. For example, if the maximum frequency setting is 60 Hz and the acceleration time setting is 30 seconds, the actual acceleration time for frequency command to reach the command at 30 Hz is 15 seconds.
- No matter how short the acceleration/deceleration time is set, the actual acceleration/deceleration time of the motor never be shorter than the minimum acceleration/deceleration time, which is determined according to the moment of inertia "J" of the mechanical system and the motor torque. If the acceleration/deceleration time setting is shorter than the minimum acceleration/deceleration time, an "Over current error [E01] to [E04]", "Overload error [E05]", or "Overvoltage error [E07]" may be triggered. For details regarding how to handle these errors, refer to "Chapter 15 Tips/FAQ/Troubleshooting".

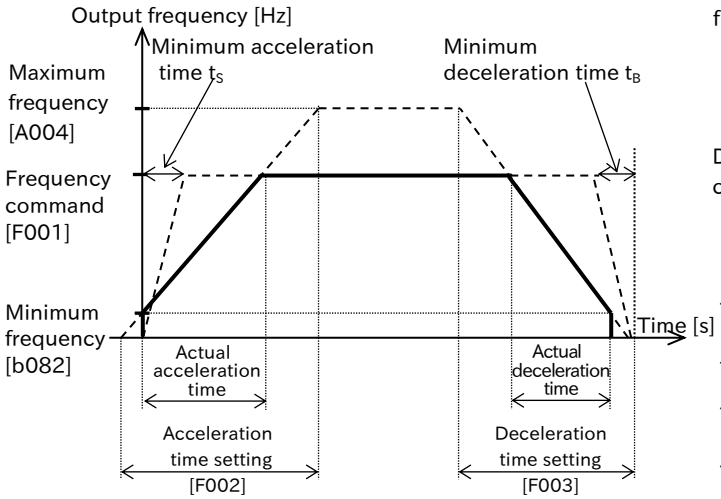


Acceleration time $t_S$ when the speed changes from zero to $N_M$

$$t_s = \frac{(J_L + J_M) \times N_M}{9.55 \times (T_s - T_L)}$$

Deceleration time $t_B$ when the speed changes from $N_M$ to zero

$$t_B = \frac{(J_L + J_M) \times N_M}{9.55 \times (T_B + T_L)}$$

$J_L$: Moment of inertia J (kg·m$^2$) of the load applied to the motor shaft
$J_M$: Moment of inertia J (kg·m$^2$) of the motor
$N_M$: Motor speed (rpm) [min$^{-1}$]
$T_s$: Maximum acceleration torque (N·m) of the motor driven by the inverter
$T_B$: Maximum deceleration torque (N·m) of the motor driven by the inverter
$T_L$: Load torque (N·m)

| Code | Item | Description | Data |
|---|---|---|---|
| [F002]*1 | Acceleration time 1 setting or monitor, 1st-motor | Sets the acceleration time from 0 Hz to the maximum frequency. | 0.00 to 3600.00 (s) |
| [F202]*1 | Acceleration time 1 setting or monitor, 2nd-motor | Sets the acceleration time from 0 Hz to the maximum frequency. | 0.00 to 3600.00 (s) |
| [F003]*1 | Deceleration time 1 setting or monitor, 1st-motor | Sets the deceleration time from the maximum frequency to 0 Hz. | 0.00 to 3600.00 (s) |
| [F203]*1 | Deceleration time 1 setting or monitor, 2nd-motor | Sets the deceleration time from the maximum frequency to 0 Hz. | 0.00 to 3600.00 (s) |
| [P031] | Acceleration/Deceleration time input source selection | The acceleration/deceleration time is set from the keypad according to the parameter settings. | 00 |
| | | The acceleration/deceleration time is set according to an EzSQ program reserved variable. | 03 |

*1. When the "2nd-motor control [SET]" input terminal is off, the acceleration/deceleration time 1 setting or monitor, 1st-motor ([F002]/[F003]) are set as the acceleration/deceleration time.
When the "2nd-motor control [SET]" input terminal is on, the acceleration/deceleration time 1 setting or monitor, 2nd-motor ([F202]/[F203]) are set as the acceleration/deceleration time.

## 9.3.2 Switching the Acceleration/Deceleration Time in Two Stages

**Q**

- How to change the motor acceleration/deceleration time using an external I/O input signal?
- Since high torque is required to start the motor, how to accelerate slowly at low speed and then have higher acceleration at speed above a certain level?
- How to accelerate/decelerate the motor quickly for forward rotation, but slowly for reverse rotation?

**A**

- The two-stage acceleration/deceleration function can be used to switch the acceleration/deceleration time during operation according to the "Accel/Decel change trigger selection [A094]*1" setting.
- To perform switching using an input terminal, assign "2-stage Acceleration/Deceleration [2CH]" to any one of input terminal function.

| Code | Item | Description | Data |
|---|---|---|---|
| [F002]*1 | Acceleration time 1 setting or monitor | Sets acceleration time. | 0.00 to 3600.00 (s) |
| [F003]*1 | Deceleration time 1 setting or monitor | Sets deceleration time. | |
| [A092]*1 | Acceleration time 2 | Sets acceleration time 2. | |
| [A093]*1 | Deceleration time 2 | Sets deceleration time 2. | |
| [A094]*1 | Accel/Decel change trigger selection | Switches the acceleration/deceleration time according to the [2CH] input terminal. | 00 |
| | | The acceleration/deceleration time is switched according to the frequency set in [A095]*1/[A096]*1. | 01 |
| | | When the rotation direction command is switched during operation, the acceleration/deceleration time is also switched. | 02 |
| [A095]*1 | Accel1 to Accel2 frequency transition point | Sets the frequency at which to switch when accelerating and [A094]*1 is set to "01". | 0.00 to 590.00 (Hz) |
| [A096]*1 | Decel1 to Decel2 frequency transition point | Sets the frequency at which to switch when decelerating and [A094]*1 is set to "01". | |
| [C001] to [C007] | Input terminal function | 2-stage acceleration/deceleration [2CH]: When [A094]*1 is set to "00", the acceleration/ deceleration time can be switched by turning this signal on and off. | 09 |

*1. "2nd-motor control [SET]" target parameter. The second control parameter is also subject to setting.

### ■ When acceleration/deceleration time is switched by the [2CH] input terminal

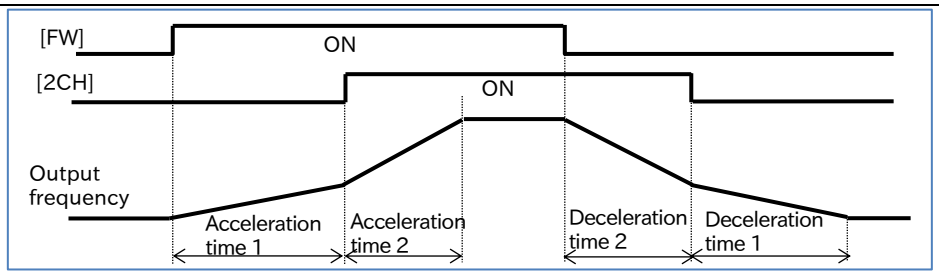


### ■ When acceleration/deceleration time is switched by the set frequency

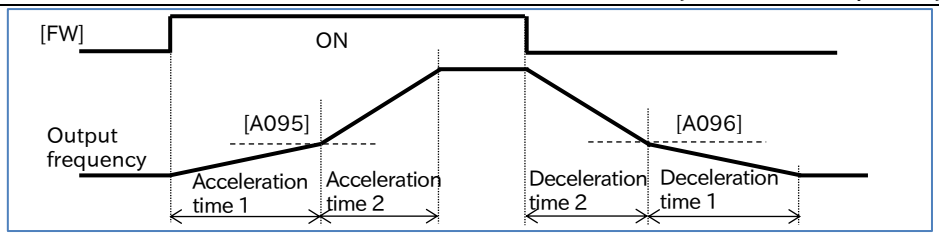


### ■ When acceleration/deceleration time is switched by the rotation direction command

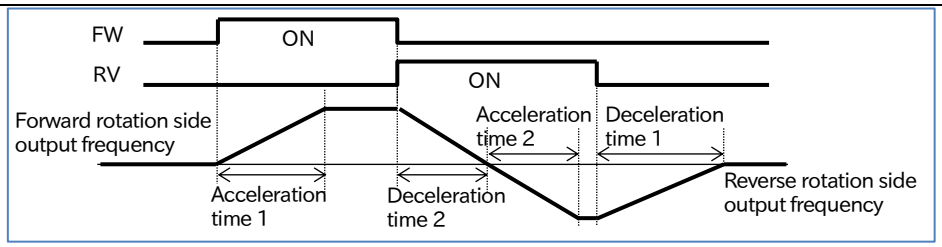

## 9.3.3 Stopping Acceleration/Deceleration

**Q**

- Since high torque is required to start the motor, how to stop acceleration temporarily until the motor rotation follows the command?
- How to stop the deceleration until the motor rpm drops sufficiently to allow the deceleration to completely stop the motor?

**A**

- The acceleration/deceleration hold function allows you to temporarily stop acceleration/deceleration, holding the current frequency to continue operation at a constant speed.
- The hold function is effective for mechanical systems that have a large moment of inertia.
- The acceleration hold function is useful in cases such as when you wish to prevent an overcurrent trip upon startup by waiting until any motor slip is minimized. The deceleration hold function is useful in cases such as when you wish to prevent an overvoltage trip during deceleration by waiting until any motor slip is minimized.
- There are two methods to stop acceleration and deceleration, which can both be used together.
  - Automatically stopping at a predetermined frequency and stop time.
  - Stopping according to an input terminal function.

**!**

- If the acceleration/deceleration hold function is activated when "Acceleration/deceleration curve selection [A097]/[A098]" is set to a value other than " Linear (00)", the current acceleration/deceleration pattern is cleared. As soon as the hold function is deactivated, the pattern is recalculated and acceleration/deceleration is performed again.

| Code | Item | Description | Data |
|---|---|---|---|
| [A069] | Acceleration stop frequency | Sets the stop frequency during acceleration. | 0.00 to 590.00 (Hz) |
| [A070] | Acceleration stop time | Sets the stop time during acceleration. | 0.0 to 60.0 (s) |
| [A154] | Deceleration stop frequency | Sets the stop frequency during deceleration. | 0.00 to 590.00 (Hz) |
| [A155] | Deceleration stop time | Sets the stop time during deceleration. | 0.0 to 60.0 (s) |
| [C001] to [C007] | Input terminal function | Acceleration/deceleration disable [HLD]: When this signal is turned on, the acceleration/deceleration is stopped. When it is turned off, the acceleration/deceleration is restarted. | 83 |

### Applying the hold function at a predetermined set frequency and set time

- Once the set frequency command value is reached during acceleration or deceleration, the acceleration/deceleration is paused for the set length of time. Separate hold frequency and hold time settings can be used for both acceleration and deceleration.

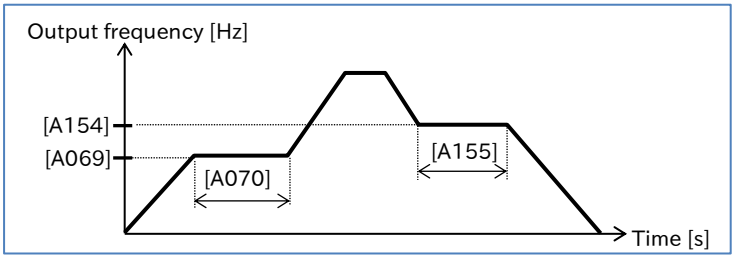


### Applying the hold function using the [HLD] input terminal

- When the [HLD] input terminal turns on, the acceleration/deceleration is stopped.

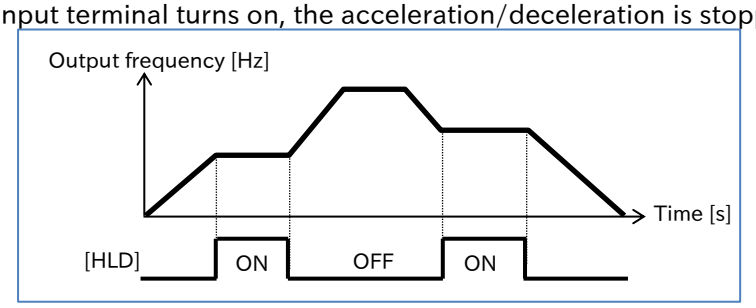

## 9.3.4 Changing the Acceleration/Deceleration Pattern

**Q**

- How to lessen the shock when there are sudden movements in elevators or conveyors that could lead to the load collapsing?
- How to lessen the shock when movement starts or stops?
- How to change the acceleration gradient depending on winding or unwinding?

**A**

- Custom acceleration and deceleration patterns can be set for each system.
- The "Acceleration curve selection [A097]" and "Deceleration curve selection [A098]" allow individual custom pattern settings to be used for both acceleration and deceleration.
- When an acceleration/deceleration pattern is selected, the acceleration/deceleration time is set from 0 Hz to the maximum frequency.

| Code | Item | Description | Data |
|---|---|---|---|
| [A097] | Acceleration curve selection | The acceleration pattern is a linear. | 00 |
| | | The acceleration pattern is an S-curve. | 01 |
| | | The acceleration pattern is a U-curve. | 02 |
| | | The acceleration pattern is a reverse U-curve. | 03 |
| | | The acceleration pattern is an EL-S-curve. | 04 |
| [A098] | Deceleration curve selection | Used to select the curve pattern deceleration. The same patterns used for acceleration are available. | 00 to 04 |
| [A131] | Acceleration curve constant | Sets the degree of curvature (how much it deviates from a straight line) for S-curve, U-curve, and reverse U-curve. | 1 to 10 |
| [A132] | Deceleration curve constant | | |
| [A150] | EL-S-curve ratio at start of acceleration | Specifies the curvature of curved sections when using the EL-S-curve. (For acceleration) | 0 to 50 (%) |
| [A151] | EL-S-curve ratio at end of acceleration | | |
| [A152] | EL-S-curve ratio at start of deceleration | Specifies the curvature of curved sections when using the EL-S-curve. (For deceleration) | 0 to 50 (%) |
| [A153] | EL-S-curve ratio at end of deceleration | | |

### Types of acceleration/deceleration curve patterns and examples of their applications

| Pattern setting | Linear (00) | S-curve (01) | U-curve (02) | Reverse U-curve (03) | EL-S-curve (04) |
|---|---|---|---|---|---|
| [A097] (Acceleration) | 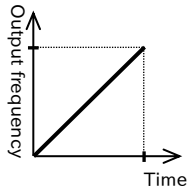  | 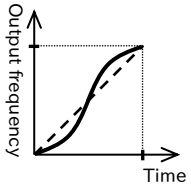  | 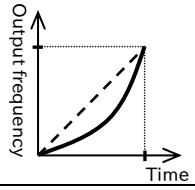  | 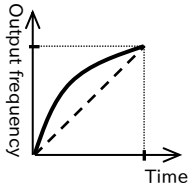  | 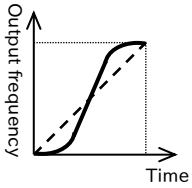  |
| [A098] (Deceleration) | 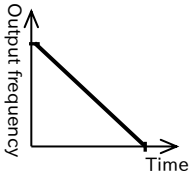  | 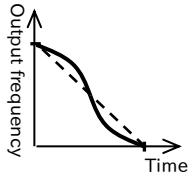  | 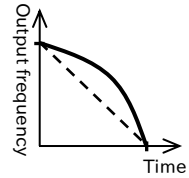  | 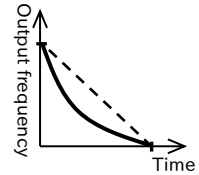  | 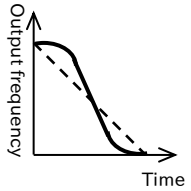  |
| Example applications | Providing linear acceleration/ deceleration up to the frequency setting value. | Effective in preventing the collapse of cargo on equipment such as elevators and conveyors. | Effective for controlling the tension of equipment such as winders and preventing the wound material from breaking. It is also suitable for one-shot take-up and unwinding. | | Provides shock-less starting and stopping. It is similar to the S-curve, but the middle section is linear. Effective applications such as elevators. |

## Setting the curvature for S-curve, U-curve, and reverse U-curve

- When S-curve, U-curve, or reverse U-curve pattern is selected in the [A097]/[A098], the curvature can be set in [A131]/[A132].
- The figure below includes examples of curve constants for S-curve, U-curve, and reverse U-curve for the values 02 and 10.

| Example of S-curve acceleration | Example of U-curve acceleration | Example of reverse U-curve acceleration |
|---|---|---|
| 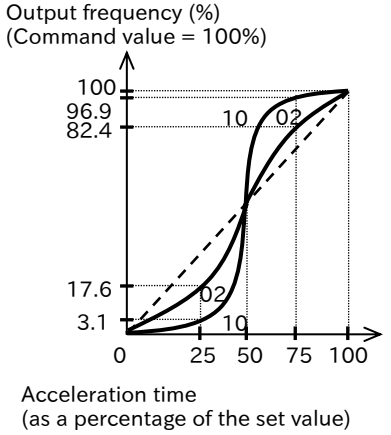 | 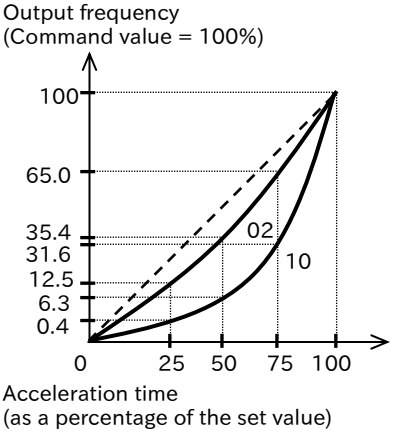 | 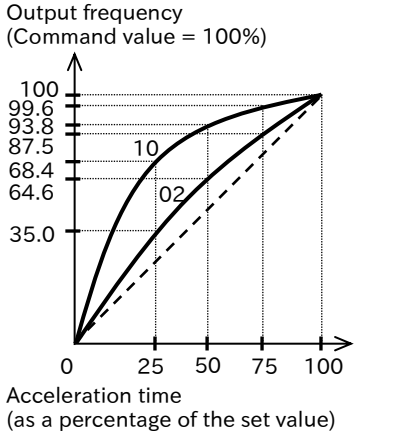 |







## Setting the curvature for EL-S-curve

- When using EL-S-curve, the curvature settings [A150] to [A153] can be used.
- If all curvature settings are set to 50 (%), the result will be equivalent to an S-curve.

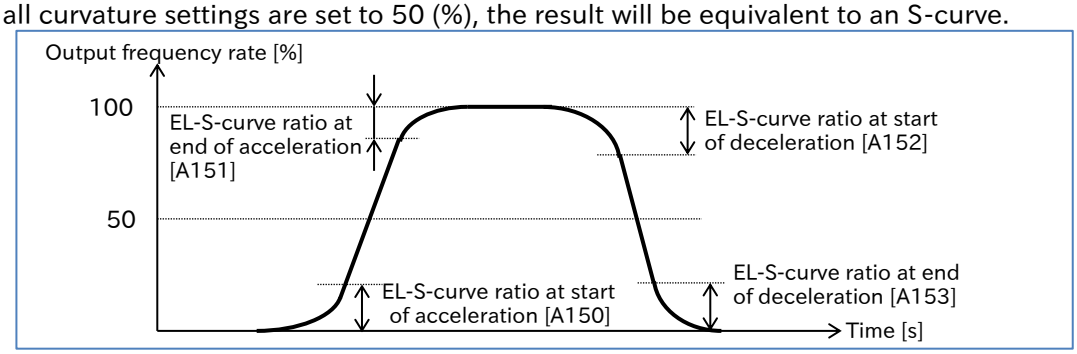


- When you change the acceleration/deceleration pattern, the gradient of the acceleration/deceleration time becomes steeper in some sections. If an overcurrent or overvoltage occurs, it is necessary to adjust the acceleration/deceleration time.
- When the acceleration/deceleration pattern has any setting other than "Linear (00)", the frequency command selection should not be an analog input command. If the command value becomes unstable, the acceleration/deceleration pattern is recalculated, which may result in the actual acceleration/deceleration time being extended.
- When the acceleration/deceleration pattern is set to a curve (not a linear), changing the frequency command or acceleration/deceleration time during acceleration/deceleration, or stopping the acceleration/deceleration using the "Acceleration/deceleration disable [HLD]" input terminal results in the pattern being recalculated from that point in time. Please note that this may result in excessive shock at the recalculation point, as shown in the example below.

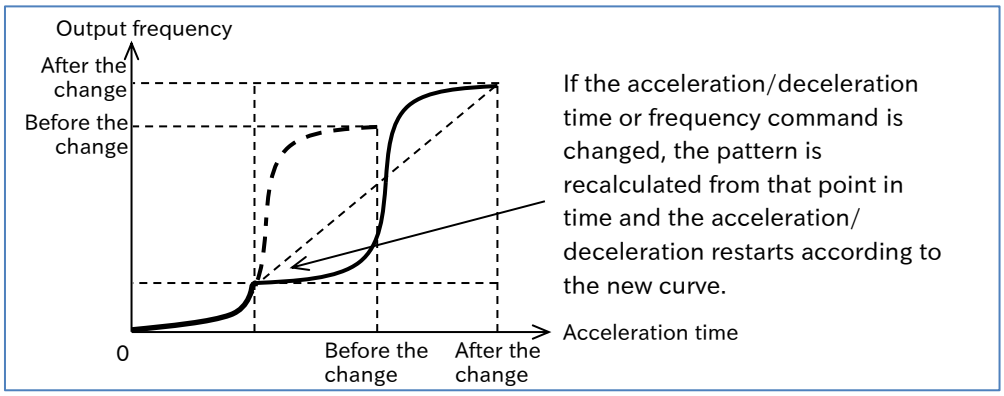

## 9.3.5 Making the Frequency Instantaneously Follow the Command

Q
- How to output an analog command and have the frequency match it?
- How to make the motor follow the command with minimal delay?

A
- When the "Acceleration/Deceleration cancellation [LAC] (46)" input terminal turns on, the acceleration/deceleration is canceled and the output frequency instantaneously responds to changes in the frequency command value.

!
- Since the LAD cancellation function causes the output to instantaneously follow the command value, a large increase or decrease may result in an over current trip, overload trip, or overvoltage trip.
- The [LAC] terminal can be used for any frequency command, including commands based on parameter settings or communication functions.

| Code | Item | Description | Data |
|---|---|---|---|
| [C001] to [C007] | Input terminal function | Acceleration/Deceleration cancellation [LAC]: When this signal is turned on, the acceleration/deceleration is canceled and the output frequency follows the frequency command. | 46 |

### Example of the LAD cancellation function

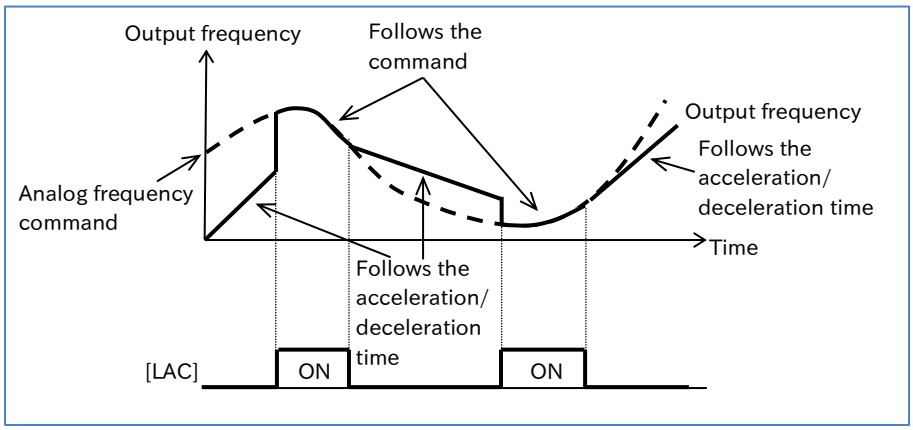

# 9.4 Limiting Frequency Command/RUN Command

## 9.4.1 Limiting Frequency Command

**Q**

- How to limit the range of the frequency command?
- How to set a lower limit on the frequency command value to prevent the flow rate from becoming too low?
- How to control the upper limit of the frequency command value as a system?

**A**

- The frequency limit function allows you to place upper and lower limits on the frequency command.
- This function limits any frequency commands that fall outside the set range of the frequency limit.
- The frequency limit function is disabled when set to 0 Hz.

**!**

- Be sure to set the frequency limit function so that the upper limit does not exceed the maximum frequency setting. Please note that inconsistent settings may trigger a warning message.
- When configuring the frequency limit function, start by setting the "Upper frequency limit [A061][*1]".
  Be sure that setting should be that the "Upper frequency limit [A061][*1]" is greater than the "Lower frequency limit [A062][*1]".
- Although "Jogging frequency [A038]" can be set outside the range of the frequency limit function, the actual output is limited according to the frequency limit function.
- Be sure to set "Output frequency setting or monitor [F001][*1]" and multi-speed commands 1 to 15 so that they remain within the upper and lower limits.

| Code | Item | Description | Data |
|---|---|---|---|
| [A061][*1] | Upper frequency limit | Sets the upper limit of the frequency command value. | 0.00,<br>Lower frequency limit to Maximum frequency (Hz) |
| [A062][*1] | Lower frequency limit | Sets the lower limit of the frequency command value. | 0.00,<br>Minimum frequency to Upper frequency limit (Hz) |

*1. "2nd-motor control [SET]" target parameter. The second control parameter is also subject to setting.

### Example of applying upper and lower frequency limits

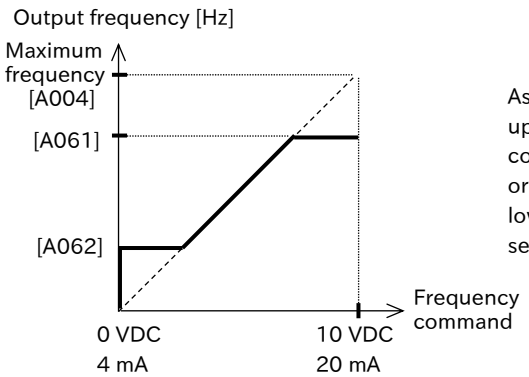


As shown in the figure to the left, after applying upper and lower limits, when a frequency command that is input using an analog voltage or current signal falls outside the upper and lower limits, the values become the frequencies set in [A061] and [A062].

## 9.4.2 Limiting RUN Command Direction

Q

- How to apply a limit to the RUN command direction?
- How to prevent equipment from being damaged if the inverter outputs in the reverse direction?

A

- By setting the "RUN direction restriction selection [b035]" parameter, it is possible to limit the RUN command direction to either forward or reverse rotation.
- This function can also limit reverse rotation commands that are triggered by the frequency command sign changing to negative.
- When the operation direction limit function is activated, output to the motor is stopped, and 00000 is displayed on the inverter display.

!

- This function works by limiting RUN command direction. Therefore, it is not effective in cases such as when using control methods other than V/f control where control calculations can result in an output that causes reverse operation. To limit the output, enable "Direction reversal protection selection [b046]". For details, refer to "9.4.3 Limiting Rotation Output Direction".
- Even when this function is used, the motor may rotate in the reverse direction when subject to external forces. When using this function as a protection against reverse rotation, the system must be free of external forces that are applied in the reverse direction.

| Code | Item | Description | Data |
|---|---|---|---|
| [b035] | RUN direction restriction selection | No restriction | 00 |
| | | Only forward rotation commands are enabled. (Reverse rotation is limited.) | 01 |
| | | Only reverse rotation commands are enabled. (Forward rotation is limited.) | 02 |

## 9.4.3 Limiting Rotation Output Direction

Q

- How to prevent equipment damage caused by the motor reversing?

A

- In some cases, the control system may result in a rotational output that is in the opposite direction of the RUN command, such as when operating at low speeds. The "Direction reversal protection selection [b046]" can be set to limit the rotation output so it keeps the same direction as the command.
- This function should be enabled in cases when reverse rotation of the motor results in equipment damage.

!

- This function is enabled when "Control mode selection [A044][*1]" is set to "Sensorless vector control (03)".
- Even when this function is used, the motor may rotate in the reverse direction when subject to high-load external forces. When using this function as a protection against an improper rotation direction, be sure to thoroughly confirm that the equipment does not rotate in the reverse direction.

| Code | Item | Description | Data |
|---|---|---|---|
| [A044][*1] | Control mode selection | Sensorless vector control | 03 |
| [b046] | Direction reversal protection selection | Disabled | 00 |
| | | Enabled (do not perform reverse rotation) | 01 |

*1. "2nd-motor control [SET]" target parameter. The second control parameter is also subject to setting.

## 9.4.4 Disabling Output Until RUN Command Permission

**Q**

- How to prevent the motor from running without permission from the control system?

**A**

- To ensure that the system configuration remains safe, inverter operation can be disabled until an operation permission signal that is separate from the RUN command is input.
- When "RUN enable [REN] (84)" is assigned to an input terminal, the inverter operation is not permitted until the [REN] input terminal is turned on.

**!**

- This function is enabled by assigning [REN] to one of the input terminals.
- When the [REN] input terminal is assigned and the signal is off, the inverter is prevented from operating. When performing temporary operation such as commissioning, the [REN] input terminal must be set to "No assignment [no] (no)".

| Code | Item | Description | Data |
|---|---|---|---|
| [C001] to [C007] | Input terminal function | RUN enable [REN]:<br>Controls whether operation output is permitted.<br>ON: Operation permitted<br>OFF: Operation not permitted | 84 |

### Example of the "RUN enable [REN]"

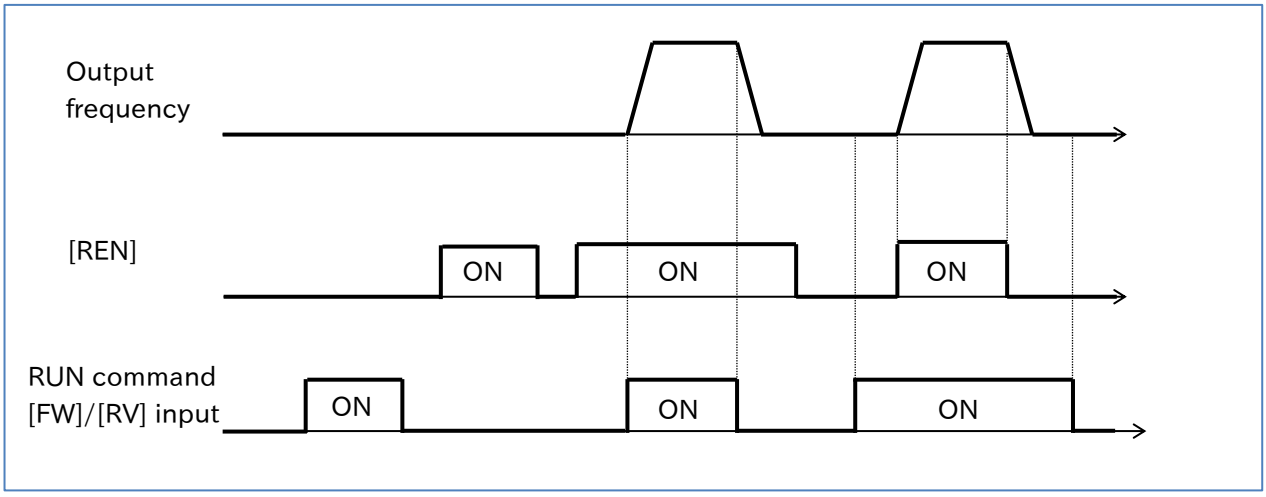

# 9.5 Selecting Control Mode for the Motor and Load

## 9.5.1 Selection of Control Mode

Q
- What are the motor control methods available?
- How to set the appropriate control method for the intended application?

A
- Use "Control mode selection [A044][*1]" to set the appropriate control mode according to the drive motor and intended application. For details, refer to the table below, and the descriptions of each control mode provided in the following sections.

| Control mode | Summary | Torque boost | Automatic energy-saving operation | V/f control with encoder | Multi motor drive | Motor constant settings or auto-tuning |
|---|---|---|---|---|---|---|
| V/f control Constant torque characteristics | Suitable for easy setup and adjustment for conveyors, carts, and other motor drive applications requiring a constant torque. | Applicable | Applicable[*2] | Applicable[*3] | Applicable[*2] | Not required[*2] |
| V/f control Reduced torque characteristics | Suitable for easy setup and adjustment for fans, pumps, and other motor drive applications that do not require a large torque. | Applicable | Applicable[*2] | Applicable[*3] | Applicable[*2] | Not required[*2] |
| V/f control Free V/f | Suitable for applications where the user is free to set an output voltage relative to the output frequency, such as for special motors and other such applications. | Not applicable | Not applicable | Applicable[*3] | Applicable | Not required |
| Sensorless vector control | Suitable for applications that require high torque from low speeds, and applications that require high precision output frequency. | Not applicable | Not applicable | Not applicable | Not applicable | Required |

*1. "2nd-motor control [SET]" target parameter. The second control parameter is also subject to setting.
*2. Automatic energy-saving operation and multi motor drive will be unavailable while using the automatic torque boost function. In addition, motor constant settings or auto-tuning are required.
*3. This does not function when "2nd-motor control [SET]" is on. This function is only available when using the 1st motor control mode.

!
- When using sensorless vector control and automatic torque boost, be sure to set the motor constant for your motor. For details, refer to "8.1.5 Setting Motor Constant" or "8.3 Carrying Out Motor Auto-tuning ".
- When multiple induction motors (IM) are driven by a single inverter, use V/f control.
- In V/f control, an external encoder provides feedback on the actual motor speed, allowing for highly accurate and stable speed control. For details, refer to "9.5.5 Motor Operation with V/f Control with Encoder".

## 9.5.2 Driving with V/f Control

Q

- How is this used for fans, pumps, and other applications that do not require a large torque?
- How is this used for conveyors, carts, overhead cranes, and other applications that require a certain degree of torque, regardless of speed?
- How to freely set the output voltage according to the output frequency for special motors or applications with fluctuating loads?
- How to drive multiple motors on a single inverter?

A

- V/f control is a method of motor control where output voltage characteristics are set relative to the inverter output frequency. This is an easy way to use motors when individual motor constants for motors in use do not need to be set.
- The V/f characteristic is useful for the following types of applications.
  - Applications requiring constant torque regardless of rotational speed, such as conveyors, carts, and overhead crane runs. (Constant torque characteristics)
  - Fans, pumps, and other applications that do not require a large torque at low speeds. (Reduced torque characteristics)
  - Special motors and other applications where the load varies greatly based on the rotational speed that require the output voltage to be freely set relative to the output frequency. (Free V/f)
- Sensorless vector control is recommended for applications that require a large torque even at low speeds, applications that require the following capability to change the output frequency according to load variations, and applications that use simple positioning control. For details, refer to "9.5.7 Motor Operation with Sensorless Vector Control".

| Code | Item | Description | Data |
|---|---|---|---|
| [A044][*1] | Control mode selection | V/f control, Constant torque characteristics | 00 |
| | | V/f control, Reduced torque characteristics | 01 |
| | | V/f control, Free V/f | 02 |

!

- Refer to "8.1 Mandatory Setting for Operation" to set the basic motor parameters before driving the motor.
- Torque boost function can be used to adjust the torque if there is insufficient low-speed torque while using V/f control. For details, refer to "9.5.3 Using the Torque Boost Function".
- Adjusting the " Async. motor stabilization constant [H006][*1]" may improve an unstable motor rotation caused by hunting or vibration. For details, refer to "9.5.6 Stabilizing Motor Hunting".
- If vibration occurs while running multiple motors on a single inverter, adjusting [H006][*1] down may stabilize the motors.

*1. "2nd-motor control [SET]" target parameter. The second control parameter is also subject to setting.

## A Constant torque characteristic (VC characteristic)

- The Constant torque characteristic is suitable for applications requiring constant torque regardless of rotational speed, such as conveyors, carts, carrier machines, and overhead crane runs.
- The constant torque characteristic has an output voltage that is proportional to the command frequency across a straight line connecting 0 Hz/0 V with the base frequency/rated voltage.
- Although the output voltage is set in proportion to the frequency from 0 Hz to the base frequency, the output voltage from the base frequency to the maximum frequency remains constant, regardless of the frequency.
- Use the manual torque boost function to add a boost voltage to the basic proportional line. The manual torque boost function is useful when torque is insufficient at low speeds. For details, refer to "9.5.3 Using the Torque Boost Function".

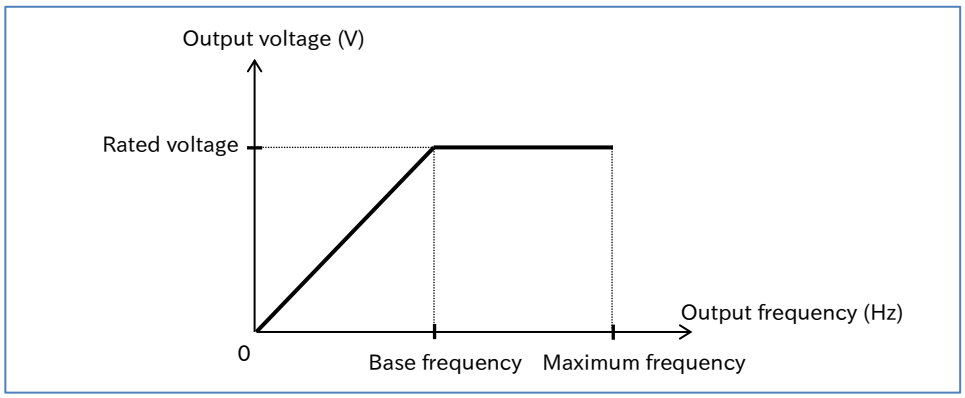


## A Reduced torque characteristic (VP to the power of 1.7 characteristic)

- The reduced torque characteristic is suitable for fans, pumps, and other low speed motor drive applications that do not require a large torque.
- In the low speed range, the output voltage is lowered, improving efficiency, and reduced noise and vibration.

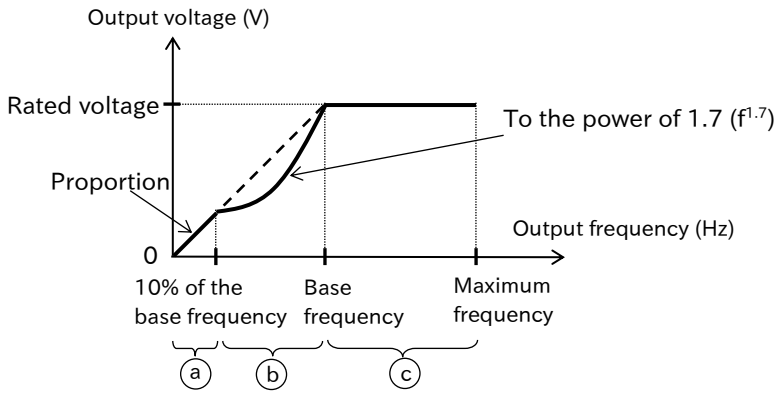


Period a: The constant torque characteristic covers the range from 0 Hz to 10% of the base frequency.

(Example) If the base frequency is 60 Hz, the constant torque characteristic covers the range from 0 to 6 Hz.

Period b: The reduced torque characteristic covers the range from 10% of the base frequency to the base frequency.
The voltage is output on a curve to the power of 1.7 in relation to the frequency.

Period c: The voltage is a constant output characteristic from the base frequency to the maximum frequency.

## A Free V/f

- Free V/f is suitable for special motors and other applications where the load varies greatly based on the rotational speed that require the output voltage to be freely set relative to the output frequency. It is also useful for manually optimizing voltage characteristics to conserve energy.
- When using free V/f, the V/f characteristic can be freely set by setting the voltage and frequency at seven points.

| Code | Item | Description | Data |
|---|---|---|---|
| [b100] | Free-V/f frequency 1 | Sets the frequency at each break point. | 0 to [b102] (Hz) |
| [b102] | Free-V/f frequency 2 | | 0, [b100] to [b104] (Hz) |
| [b104] | Free-V/f frequency 3 | | 0, [b102] to [b106] (Hz) |
| [b106] | Free-V/f frequency 4 | | 0, [b104] to [b108] (Hz) |
| [b108] | Free-V/f frequency 5 | | 0, [b106] to [b110] (Hz) |
| [b110] | Free-V/f frequency 6 | | 0, [b108] to [b112] (Hz) |
| [b112] | Free-V/f frequency 7 | | 0, [b110] to 590 (Hz) |
| [b101] | Free-V/f voltage 1 | Sets the output voltage at each break point. | 0.0 to 800.0 (V) |
| [b103] | Free-V/f voltage 2 | | |
| [b105] | Free-V/f voltage 3 | | |
| [b107] | Free-V/f voltage 4 | | |
| [b109] | Free-V/f voltage 5 | | |
| [b111] | Free-V/f voltage 6 | | |
| [b113] | Free-V/f voltage 7 | | |

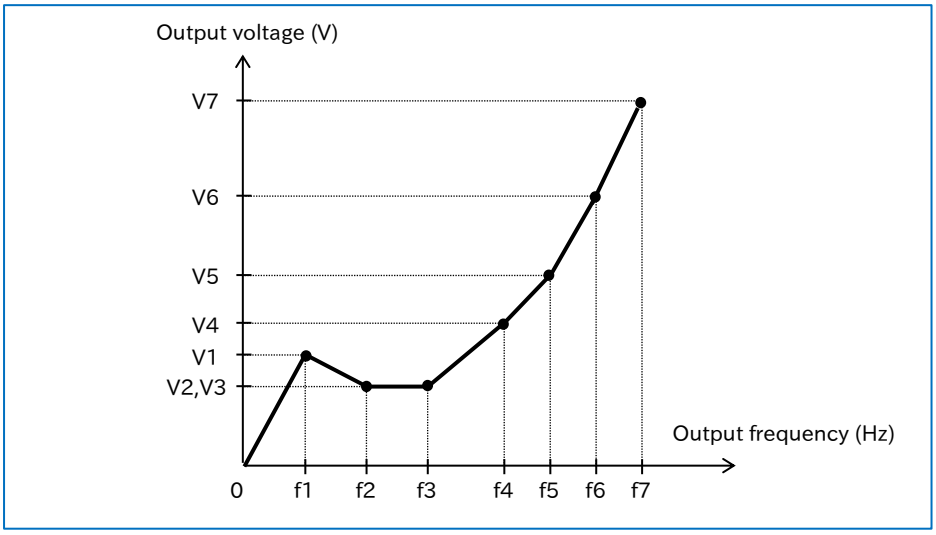


- Always set the free V/f frequency in the order of f1 ≦ f2 ≦ f3 ≦ f4 ≦ f5 ≦ f6 ≦ f7.
- The initial value of all free V/f frequencies is 0 Hz. Set the free V/f in order from 7, to 6, 5, 4, 3, 2, 1.
- If the "Control mode selection [A044][*1]" is set to "[V/f] Free V/f (02)", "Torque boost mode selection [A041][*1]", "Base frequency [A003][*1]" and "Maximum frequency [A004][*1]" will be invalid, and the "Free-V/f frequency 7 [b112][*1]" is treated as the maximum frequency. However, when [b112] set to less than 30 Hz, the inverter operation is not permitted.
- The inverter cannot output a voltage greater than the input voltage or the "Motor rated voltage [A082][*1]", even if a higher value is set for voltages 1 through 7. In addition, due care is required for appropriate characteristic setting, as failure to do so may induce overcurrent during acceleration/deceleration, or cause vibration in the motor or machine.

*1. "2nd-motor control [SET]" target parameter. The second control parameter is also subject to setting.

## 9.5.3 Using Torque Boost Function

**Q**

- What should be done when motor rotation is slow to start after the start of operation?
- What should be done if there is insufficient low-speed torque.

**A**

- V/f control does not apply any special corrections for motor control. Therefore, when the output voltage is low, the voltage decreases due to the resistance component and wiring inside the motor, which reduces the voltage flowing to the motor. The torque boost function compensates for this drop in voltage to counter the reduction in torque at low-speeds.
- There are two torque boost functions: manual torque boost and automatic torque boost.

**!**

- The manual/automatic torque boost functions are available when the "Control mode selection [A044][*1]" is set to "[V/f] Fixed torque characteristics (IM) (00)" or "[V/f] Reducing torque characteristics (IM) (01)".
- Take care to avoid overexciting the motor when increasing the manual torque boost setting. Boosting the torque increases the flow of current and may cause motor burnout.

**A**

### Setting the manual torque boost function

- For the manual torque boost function, set the "Manual torque boost value [A042][*1]" and "Manual torque boost peak speed [A043][*1]" to add voltage during V/f control, as shown in the figure below. Set the values as a percentage of the "Base frequency [A003][*1]" and "Motor rated voltage [A082][*1]", respectively.

| Code | Item | Description | Data |
|---|---|---|---|
| [A041][*1] | Torque boost mode selection | Applies the manual torque boost. | 00 |
| [A042][*1] | Manual torque boost value | Sets the amount of boost at the manual torque boost break point. Set the value as a percentage of the " Motor rated voltage [A082][*1]". | 0.0 to 20.0 (%) |
| [A043][*1] | Manual torque boost peak speed | Sets the manual torque boost break point (the point at which the maximum voltage is added). Set the value as a percentage of the "Base frequency [A003][*1]". | 0.0 to 50.0 (%) |

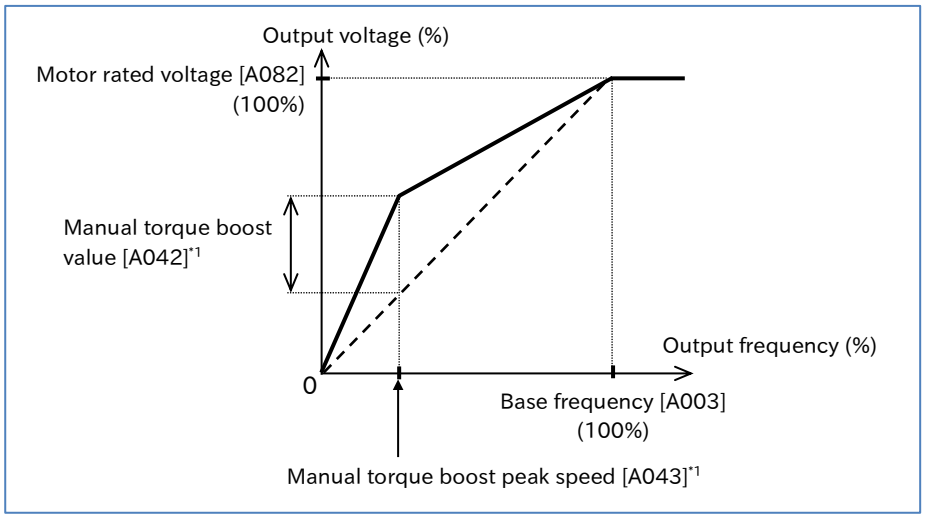


*1. "2nd-motor control [SET]" target parameter. The second control parameter is also subject to setting.

## A Setting the automatic torque boost function

- The automatic torque boost function automatically adjusts the output frequency and output voltage according to load conditions.
- When using the automatic torque booth function, be sure to set the motor constant for your motor. For details, refer to "8.1.5 Setting Motor Constant" or "8.3 Carrying Out Motor Auto-tuning".
- Automatic energy-saving operation, multi motor drive, and V/f control with encoder will be unavailable while using the automatic torque boost function.

| Code | Item | Description | Data |
|---|---|---|---|
| [A041][*1] | Torque boost mode selection | Applies the automatic torque boost. | 01 |
| [A046][*1] | Automatic torque boost voltage compensation gain | Adjusts the output frequency and added voltage when automatically boosting torque. | 0 to 255 |
| [A047][*1] | Automatic torque boost slip compensation gain | | 0 to 255 |

- If an overcurrent trip occurs during deceleration, set "AVR function selection [A081][*1]" to "Always enable (00)".
- If the desired characteristics cannot be obtained, adjust each item referring to the table below.
- Overcurrent and other issues may occur if motor rotation is obstructed due to motor locking from braking or interference from foreign objects. If this cannot be resolved with adjustments, try checking around the motor's periphery.
- If the "Output frequency monitor [d001]" changes significantly under load, a function that makes automatic changes to the frequency, such as the overload limit function, non-stop operation during instantaneous power failure, or the overvoltage suppressor, may have been triggered under certain function settings. For details, refer to "Chapter 15 Tips/FAQ/Troubleshooting".

| Event ▹ | Probable cause ▹ | Example of countermeasures |
|---|---|---|
| Slow motor rotation at low speed | Unable to produce torque due to insufficient output voltage. | Increase the "Automatic torque boost voltage compensation gain [A046][*1]" in increments of around 5%. |
| | | Reduce the "Carrier frequency [b083]". |
| | Unable to produce torque due to insufficient frequency compensation. | Increase the "Automatic torque boost slip compensation gain [A047][*1]" in increments of around 5%. |
| Reduction in motor rotation frequency with heavier loads. | Unable to produce torque due to insufficient frequency compensation. | Increase the "Automatic torque boost slip compensation gain [A047][*1]" in increments of around 5%. |
| Increase in motor rotation frequency with heavier loads. | Increase in frequency due to excessive frequency compensation. | Decrease the "Automatic torque boost slip compensation gain [A047][*1]" in increments of around 5%. |
| An overcurrent error occurs with heavier loads, or during acceleration. | Increase in current due to excessive voltage compensation. | Decrease the "Automatic torque boost voltage compensation gain [A046][*1]" in increments of around 5%. |
| | Increase in frequency due to excessive frequency compensation. | Decrease the "Automatic torque boost slip compensation gain [A047][*1]" in increments of around 5%. |

*1. "2nd-motor control [SET]" target parameter. The second control parameter is also subject to setting.

## 9.5.4 Driving with Energy-saving Mode

Q

- How to conserve energy when using inverter functions for fans, pumps, and similar applications?

A

- The automatic energy-saving operation function optimizes the inverter running at a constant speed to minimize inverter output power consumption. This is suited to fans, pumps, and other loads with reduced torque characteristics.
- To use this function, set "Eco drive enable [A085]" to "Enable (01)". Adjust the response and accuracy with "Eco drive response adjustment [A086]".
- This function is available when the "Control mode selection [A044] *1" is set to "[V/f] Fixed torque characteristics (IM) (00)" or "[V/f] Reducing torque characteristics (IM) (01)", and the automatic torque boost function is disabled.

!

- As this function controls the motor under relatively slow control, sudden fluctuations in the load, such as those resulting from an impact, may stall the motor and result in an overcurrent trip.
- The automatic energy-saving feature may not fully function with an analog input frequency command. If this is the case, set the "Analog input filter time constant [A016]" to 500 ms.

| Code | Item | Description | Data |
|---|---|---|---|
| [A085] | Eco drive enable | Disable | 00 |
| | | Enable | 01 |
| [A086] | Eco drive response adjustment | Data: 0 ⇔ 100<br>Response: Slow ⇔ Fast<br>Accuracy: High ⇔ Low | 0.0 to 100.0 (%) |

*1. "2nd-motor control [SET]" target parameter. The second control parameter is also subject to setting.

## 9.5.5 Driving with V/f Control with Encoder

**Q**

- How to use speed feedback from the motor to apply V/f control with a high degree of rotational accuracy?
- How to closely control fan and pump rotational output based on their speed characteristics?
- How to accurately make motor rotation follow the frequency command in order to calculate the number of turns?

**A**

- The V/f control with encoder function is a function that uses an encoder to provide feedback of the motor's actual speed for highly accurate frequency control.
- This function controls the motor by correcting PI control so that the number of motor rotations follows the frequency command.
- The V/f control with encoder function is unavailable when "2nd-motor control [SET]" is ON. This function is only available when using the first control mode.
- To set "90 degrees shift pulse (01)" or "Forward and reverse command and pulse (03)" for "Pulse input mode selection [P004]", set "Input terminal [7] function [C007]" to "Pulse input B [PLB] (85)". [PLB] can only be assigned to input terminal [7], and the active state (NO/NC) settings will also be disabled.
- For details on encoders, refer to "9.5.8 Using Encoder Feedback".

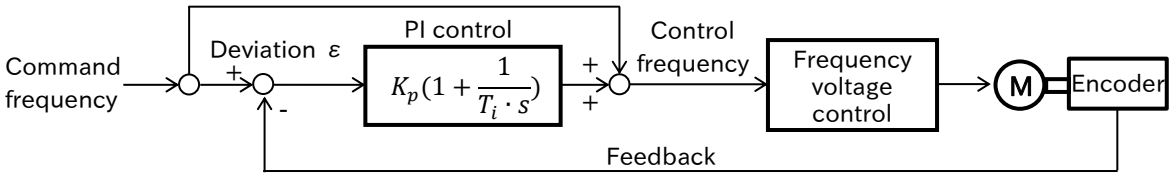


Kp: Proportional gain setting, Ti: Integral time, s: Operator, ε : Deviation
Ki: Integral gain setting (Ki=Kp/Ti)

| Code | Item | Description | Data |
|---|---|---|---|
| [A044] | Control mode selection | V/f control with encoder is only available when using V/f control of first control mode. | 00 to 02 |
| [P003] | Pulse input, target function selection | Speed feedback | 01 |
| [P004] | Pulse input mode selection | Single-phase pulse input | 00 |
| | | 90° phase difference pulse input | 01 |
| | | Forward/reverse rotation command and pulse input | 03 |
| [P011] | Encoder constant | Sets the number of pulses per encoder revolution. | 32 to 1024 |
| [P012] | Simple positioning selection | Simple position control disabled | 00 |
| [P026] | Over-speed detection level | If [P003] is 01 and [P026] is a value other than 0.0, an "Over-speed error [E81]" trip will occur when the "Detect speed monitor [d008]" equals or exceeds the {Maximum frequency × [P026]} during operation. | 0.0 to 150.0 (%) |
| [P027] | Speed deviation error detection level | Sets the excessive speed deviation level when an "Speed over deviation [DSE]" is assigned to "Output terminal function ([C021] to [C026])". | 0.00 to 120.00 (Hz) |
| [P901] | Speed detection filter constant for encoder pulse | Filter time constant for the detected speed by encoder pulse input. | 0 to 9999 (ms) |
| [H050] | Slip compensation P-gain at V/f with encoder | Proportional (P) gain for slip compensation when using V/f control with encoder. | 0.00 to 10.00 |
| [H051] | Slip compensation I-gain at V/f with encoder | Integral (I) gain for slip compensation when using V/f control with encoder. Set using integral time. | 0 to 1000 (s) |
| [C007] | Input terminal [7] function | Pulse input B [PLB]:<br>The [PLB] terminal is the input terminal for the direction signal or phase B pulse input during encoder feedback. | 85 |
| [C021]<br>[C022]<br>[C026] | Output terminal function | Speed over deviation [DSE]:<br>The [DSE] signal turns on when the following conditions are met during operation.<br>\| [d001] - [d008] \| ≧ [P027] | 22 |

## Adjustments when using V/f control with encoder

- If the desired characteristics cannot be obtained, adjust each item referring to the table below.
- When using the automatic torque boost function, first set "Torque boost mode selection [A041]" to "Manual torque boost (00)" before adjusting V/f control with speed feedback. Note that [H050]/[H051] adjustments may not be applied properly when the automatic torque boost function is in use.
- Overcurrent and other issues may occur if motor rotation is obstructed due to motor locking from braking or interference from foreign objects. If this cannot be resolved with adjustments, try checking around the motor's periphery.
- If the "Output frequency monitor [d001]" changes significantly under load, a function that makes automatic changes to the frequency, such as the overload limit function, non-stop operation during instantaneous power failure, or the overvoltage suppressor, may have been triggered under certain function settings. For details, refer to "Chapter 15 Tips/FAQ/Troubleshooting".

| Event ▹ | Probable cause ▹ | Example of countermeasures |
|---|---|---|
| Motor speed follows commands slowly. | Slow output response, causing lag in motor speed (feedback value) changes. | Increase the "Slip compensation P-gain at V/f with encoder [H050]". |
| Unstable motor operation. | Response to feedback values is excessively fast. | Reduce the "Slip compensation P-gain at V/f with encoder [H050]". |
| Overshooting and hunting occur. | | |
| Motor speed oscillates gently. | Slow integral action response. | Increase the "Slip compensation I-gain at V/f with encoder [H051]". |
| There is a delay before operations stabilize. | | |
| Motor speed oscillates and struggles to match the command speed. | Quick integral action response. | Decrease the "Slip compensation I-gain at V/f with encoder [H051]". |

## 9.5.6 Stabilizing Motor Hunting

Q

- During V/f control, the motor can vibrate and become unstable when exceeding a constant frequency. How to adjust settings to stabilize the motor?
- Motor rotation becomes unstable. How to adjust settings to stabilize the motor?

A

- The "Async. Motor stabilization constant [H006]*1" is a function that stabilizes the motor when hunting occurs. Find and adjust the point where hunting subsides within the range of values.
- Refer to the "Probable cause" in the table below when adjusting.

!

- If the motor is hunting or vibrating, check that the motor capacity, number of motor poles, base frequency, maximum frequency, and motor rated voltage are set properly. For details, refer to "8.1.3 Setting the Motor Specification Label Data to Parameters".
- Other ways to inhibit hunting include the following. If these countermeasures do not produce the desired effect, return the values to their original values.
  - Gradually reduce the "Carrier frequency [b083]" to 2 kHz.
  - Gradually reduce the "Output voltage gain [A045]*1" to 80%.

| Code | Item | Description | Data |
|---|---|---|---|
| [H006]*1 | Async. Motor stabilization constant | Adjust this value if hunting occurs in the motor. | 0 to 255 |
| [A045]*1 | Output voltage gain | Reduce this value if hunting occurs in the motor. Note the lowering the setting will reduce the output voltage. | 20 to 100 (%) |
| [b083]*2 | Carrier frequency | Changes the PWM output carrier frequency. Reduce this if hunting occurs. | 2.0 to 15.0 (kHz) (ND)<br>2.0 to 10.0 (kHz) (LD) |

*1. "2nd-motor control [SET]" target parameter. The second control parameter is also subject to setting.
*2. Restrictions may apply to the carrier frequency under certain configurations. For details, refer to "9.10 Using System Protection Functions".

| Event ▹ | Probable cause ▹ | Example of countermeasures |
|---|---|---|
| Hunting occurs in the motor. | A single inverter is driving multiple motors. | Set the "Async. Motor stabilization constant [H006]" to 0%. |
| | The driving load has a large amount of inertia, such as a fan. | Reduce the "Async. Motor stabilization constant [H006]" in increments of around 10%. |
| | This may occur when the motor capacity is larger than the inverter's rated capacity. | |
| | This may occur when the motor capacity is smaller than the inverter's rated capacity. | Increase the "Async. Motor stabilization constant [H006]" in increments of around 10%. |
| | The motor's primary resistance is less than that of a standard motor. | |

## 9.5.7 Driving with Sensorless Vector Control

Q

- How to use the inverter for applications that require a high torque at startup, such as conveyance and crane driving?
- What should be done when motor rotation slows relative to the frequency command for heavy loads?
- How to use sensorless vector control to achieve stable operation with a high startup torque and high level of precision?

A

- Sensorless vector control uses the inverter output voltage and current, and the set motor constant to infer and control motor speed and output torque. This high precision mode of operation allows for a high startup torque starting from the low frequency range (0.5 Hz) while alleviating changes in motor speed even when load changes are made.
- When using sensorless vector control, be sure to set the specifications and motor constants for the motor to be used. For details, refer to "8.1.3 Setting the Motor Specification Label Data to Parameters", "8.1.5 Setting Motor Constant", or "8.3 Carrying Out Motor Auto-tuning".
- When changes in the load occur, you can adjust the following capability to change the actual rotation speed according to the frequency command by using " Async. Motor speed response [H005][*1]". Hunting may occur in the motor if the speed response is too large. Make the proper adjustments referring to the details provided on the next page.
- Sensorless vector control cannot be selected in Light duty rating (LD mode).

!

- Inverter characteristics may be insufficient for long wiring lengths (20 meters or more), or when controlling motors from other manufacturers.
- Sufficient inverter characteristics may not be obtainable when motors that are two frame sizes smaller than the maximum applicable motor are operated.
- At low speeds (several Hz or less), the direction of rotation may be reversed relative to the RUN command direction. In such cases, enable the "Direction reversal protection selection [b046]". For details, refer to "9.4.3 Limiting the Rotation Output Direction".
- To secure torque during operation in the low speed range, even if the "Carrier frequency [b083]" is set to a value exceeding 2 kHz, it is automatically lowered to 2 kHz. In addition, since the carrier frequency increases with acceleration, so the electromagnetic sound and other phenomena from the motor may vary depending on the output frequency.
- If "AVR function selection [A081][*1]" is set to "Disable (01)" or "Disable at deceleration (02)", the current may increase and normal operation may be hindered when the voltage received from the inverter exceeds the rated voltage of the drive motor. If this occurs, set this to "Always enable (00)".
- When using a motor with frame size smaller than that of the inverter capacity, set a value that does not exceed the value in the following formula for "Torque Limit [b041] to [b044]", and enable the torque limit to prevent motor burnout. For details on the torque limit function, refer to "9.6.2 Driving with Limited Torque".

[Torque limit setting] = 200% x [Motor rated current] / [Inverter rated output current]

(Example) 0.75 kW inverter (rated output current = 5.0 A) +0.4 kW motor (rated current = 2.3 A):
[Torque limit setting] = 200% × (2.3 A / 5.0 A) = 92 %

*1. "2nd-motor control [SET]" target parameter. The second control parameter is also subject to setting.

| Code | Item | Description | Data |
|---|---|---|---|
| [A044][*1] | Control mode selection | Sensorless vector control (SLV) | 03 |
| [b046] | Direction reversal protection selection | Disable | 00 |
| | | Enable<br>(do not perform reverse rotation) | 01 |
| [H002][*1] | Async. Motor constant selection | Applies the Hitachi standard induction motor constant. "Async. Motor constant [H020] to [H024][*1]" apply. | 00 |
| | | Applies auto-tuning data.<br>"Async. Motor constant [H030] to [H034][*1]" apply. | 02 |
| [H005][*1] | Async. Motor speed response | Adjusts control responsiveness. Increase this value to improve the ability to follow the frequency command. | 1 to 1000 (%) |
| [H020]/[H030][*1] | Async. Motor constant R1 | Sets the motor constant.<br>Select whether to apply the Hitachi standard induction motor constant or auto-tuning data in "Motor constant selection [H002][*1]". | 0.001 to 65.535 (Ω) |
| [H021]/[H031][*1] | Async. Motor constant R2 | | 0.001 to 65.535 (Ω) |
| [H022]/[H032][*1] | Async. Motor constant L | | 0.01 to 655.35 (mH) |
| [H023]/[H033][*1] | Async. Motor constant I0 | | 0.01 to 655.35 (A) |
| [H024]/[H034][*1] | Async. Motor constant J | | 0.001 to 9999.000 ($kgm^2$) |

*1. "2nd-motor control [SET]" target parameter. The second control parameter is also subject to setting.

## Adjustments when using sensorless vector control

- If the desired characteristics cannot be obtained, first execute auto-tuning to set the motor constant. Then, apply adjustments referring to the table below.
- Before adjusting the "Async. Motor speed response [H005][*1]", set the "Async. Motor constant J [H024]/[H034][*1]" to the sum of the moment of inertia of the load applied to the motor shaft and the moment of inertia of the motor.
- Overcurrent and other issues may occur if motor rotation is obstructed due to motor locking from braking or interference from foreign objects. If this cannot be resolved with adjustments, try checking around the motor's periphery.
- If the "Output frequency monitor [d001]" changes significantly under load, a function that makes automatic changes to the frequency, such as the overload limit function, non-stop operation during instantaneous power failure, or the overvoltage suppressor, may have been triggered under certain function settings. For details, refer to "Chapter 15 Tips/FAQ/Troubleshooting".

| Event ▹ | Probable cause ▹ | Example of countermeasures |
|---|---|---|
| Shocks occur at startup. | The speed response of the control system is too high. | Decrease the "Async. Motor speed response [H005][*1]" in 5% increments. |
| | | Decrease the "Async. Motor constant J [H024]/[H034][*1]" in 5% increments. |
| Rotation momentarily occurs in the reverse direction to the specified direction of rotation at startup, or during low-speed operation. | The result of the motor control causes a reverse rotation command to be momentarily issued. | Enable "Direction reversal protection selection [b046]". |
| Rotation is unstable and uneven when operating at low speeds. | The speed response of the control system is too low. | Increase the "Async. Motor speed response [H005][*1]" in 5% increments. |
| | | Increase the "Async. Motor constant J [H024] /[H034][*1]" in 5% increments. |
| Hunting occurs in the motor. | The speed response of the control system is too high. | Decrease the "Async. Motor speed response [H005][*1]" in 5% increments. |
| | | Decrease the "Async. Motor constant J [H024] /[H034][*1]" in 5% increments. |
| The rotation frequency decreases when a load (power running) is applied to the motor in the stop direction. | The motor constant R2 has been set too low. | Increase the "Async. Motor constant R2 [H021] /[H031][*1]" in 5% increments up to 1.2 times the set value. |
| The rotation frequency increases when a load (power running) is applied to the motor in the stop direction. | The motor constant R2 has been set too high. | Decrease the "Async. Motor constant R2 [H021]/ [H031][*1]" in 5% increments down to 0.8 times the set value. |
| The rotation frequency increases when a load (regenerative running) is applied to the motor in the direction of rotation during low-speed operation (at several Hz). | Regenerative torque is insufficient for low-speed operation. | Increase the "Async. Motor constant R1 [H020] /[H030][*1]" in 5% increments up to 1.2 times the set value. |
| | | Increase the "Async. Motor constant I0 [H023] /[H033][*1]" in 5% increments up to 1.2 times the set value. |

*1. "2nd-motor control [SET]" target parameter. The second control parameter is also subject to setting.

## 9.5.8 Using Encoder Feedback

Q
- What settings and wiring are used for encoder feedback?

A
- Pulse input or encoder feedback input to the [PLA]/[PLB] terminals enable pulse frequency command, the V/f control with encoder function, and the simple position control function. To enable each function, set each parameter in the combinations shown in the table below.
- "Pulse input A [PLA]" is fixed to input terminal [8], and "Pulse input B [PLB]" can only be assigned to input terminal [7].

!
- Set the number of encoder pulses in units of (pulses/rotation), as converted to their motor shaft equivalents.
- Set the "Pulse input, target function selection [P003]" to "Speed feedback (01)" to operate the "Detect speed monitor [d008]". Make sure to set the correct number of motor poles and encoder pulses when using [d008].
- Regardless of the "Pulse input mode selection [P004]" setting, pulse inputs are counted in increments of +1 or -1 at the falling edge of the [PLA] terminal. (Even in the case of AB-phase 90° shift pulse input, counting is performed in multiples of 1.)

| Code | Item | Description | Data |
|---|---|---|---|
| [d008] | Detect speed monitor | Monitors the feedback detection speed. This function is enabled when "Pulse input, target function selection [P003]" is set to "Speed feedback (01)". | -590.00 to +590.00 (Hz) |
| [H004] | Async. Motor number of poles | Sets the number of motor poles. | 2 to 48 (poles) |
| [P003] | Pulse input, target function selection | Speed feedback | 01 |
| [P004] | Pulse input mode selection | Single-phase pulse input | 00 |
| | | 90 degrees shift pulse | 01 |
| | | Forward and reverse command and pulse | 03 |
| [P011] | Encoder constant | Sets the number of connected encoder pulses according to the number of pulses per motor revolution (multiplier of 1). | 32 to 1024 (pls) |
| [P012] | Simple positioning selection | Simple position control disabled | 00 |
| | | Simple position control enabled | 02 |
| [P901] | Speed detection filter constant for encoder pulse | Filter time constant for the detected speed by encoder pulse input. | 0 to 9999 (ms) |
| [C007] | Input terminal [7] function | Pulse input B [PLB]:<br>Assigns B-phase pulse input or direction signal input for encoder feedback. [PLB] can only be assigned to input terminal [7]. | 85 |

### ■ Combinations of related functions and settings using pulse input

| Enabled function | Setting | Reference section |
|---|---|---|
| Pulse frequency command | [P003] = Pulse input frequency command (00)<br>[P004] = Single-phase pulse input (00)<br>[P012] = Simple positioning disabled (00) | "9.2.8 Setting Frequency Command by Pulse Input" |
| V/f control with encoder | [A044] = V/f control (00 to 02)<br>[P003] = Speed feedback (01)<br>[P012] = Simple positioning disabled (00) | "9.5.5 Driving with V/f Control with Encoder" |
| Simple position control | [P003] = Speed feedback (01)<br>[P012] = Simple positioning enabled (02) | "9.14 Performing Positioning Operation (Simple Position Control Function)" |

## A Pulse input mode and encoder connections

- To set "90 degrees shift pulse (01)" or "Forward and reverse command and pulse (03)" as the "Pulse input mode selection [P004]", set "Pulse input B [PLB] (85)" to input terminal [7]. When doing so, the active state (NO/NC) setting is disabled. Also note that hardware specifications different between the [PLA] input terminal and the [PLB] input terminal. Hardware specifications, recognition of rotation direction, and wiring for the [PLA]/[PLB] terminals are shown below.

### Hardware specifications for the [PLA]/[PLB] terminals

| Pulse input mode [P004] | [PLA] terminal (5 to 24 VDC/Max. 32 kHz) | [PLB] terminal (24 VDC/Max. 32 kHz) |
|---|---|---|
| Single phase pulse input (00) | Single-phase pulse (PNP open collector or voltage output-type encoder) | - |
| 90 degrees shift pulse (01) | Phase A pulse (PNP open collector or voltage output-type encoder) | Phase B pulse (PNP open collector or voltage output-type encoder) |
| Forward and reverse command and pulse (03) | Single-phase pulse (PNP open collector or voltage output-type encoder) | Direction signal (Sink/source transistor or changeover switch) |

### Recognition of feedback rotation direction

| Pulse input mode [P004] | RUN command | | [PLB] | Recognition of feedback rotation direction |
|---|---|---|---|---|
| | Forward rotation [FW] | Reverse rotation [RV] | | |
| Single-phase pulse input (00) | ON | OFF | - | Forward rotation |
| | OFF | ON | - | Reverse rotation |
| 90 degrees shift pulse (01) | Either ON | | - | Encoder detection (90˚ phase difference) |
| Forward and reverse command and pulse (03) | Either ON | | OFF | Forward rotation (subject to [PLB] terminal) |
| | | | ON | Reverse rotation (subject to [PLB] terminal) |

### Phase AB 90˚ phase shift pulse wiring ([P004]=01)

- Wire the phase AB 90˚ phase shift pulse input to the [PLA] and [PLB] terminals as shown in the figure below. As the [PLB] terminal is also used with input terminal [7], use all intelligent input terminals, including the [PLB] terminal, with source logic (voltage output-type encoder or PNP open collector-type encoder). In addition, set the input voltage high level within intelligent input terminal specifications (18 to 24 VDC).

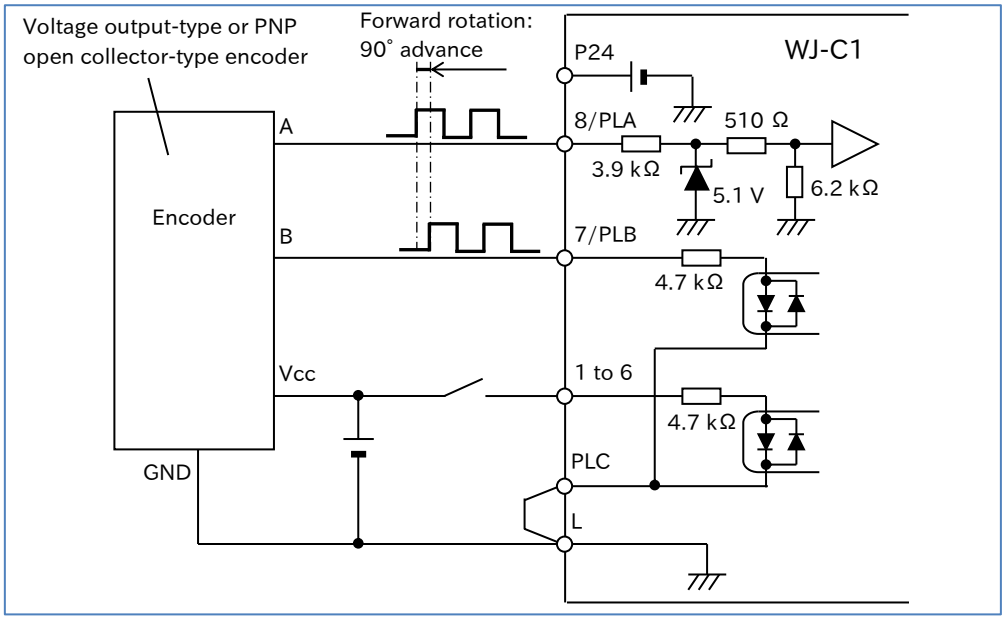

## Single-phase pulse and forward/reverse rotation command wiring ([P004]=00, 03)

- When wiring for single-phase pulse or forward/reverse commands and single-phase pulse, refer to the figure below.
  Input a single-phase pulse to the [PLA] terminal, and a direction signal to the [PLB] terminal. The [PLB] terminal is compatible with both sink logic and source logic by altering the position of the short-circuit wire.

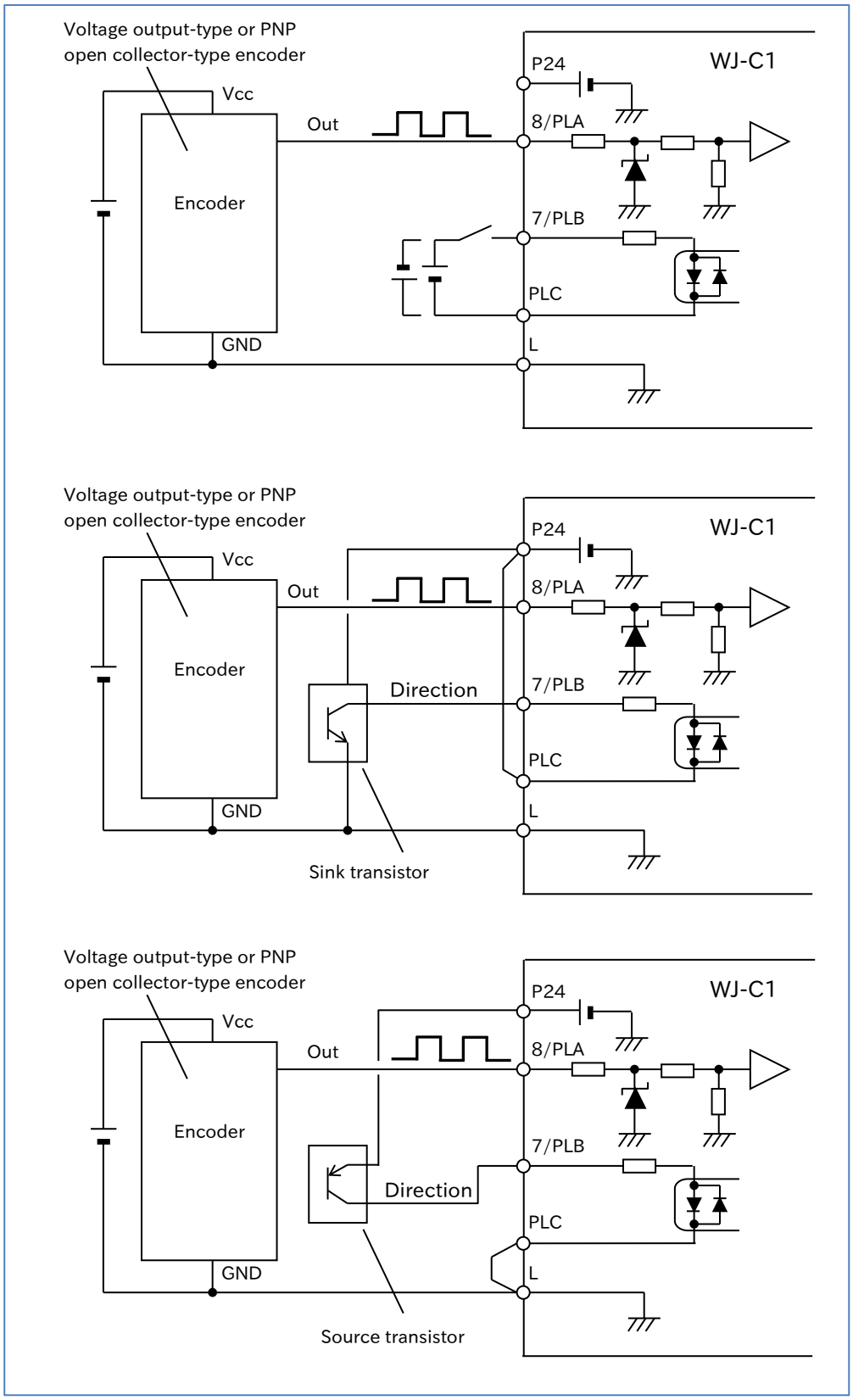

## A Protection function when using encoder feedback

- When encoder feedback is enabled, the following protective functions are available. Please use according to the intended application.

| Code | Item | Description | Data |
|---|---|---|---|
| [P015] | Creep speed | Low operation speed before positioning in simple position control is complete, and the speed of encoder disconnection detection judgment. | Minimum frequency [b082] to 10.00 (s) |
| [P026] | Over-speed detection level | A trip will occur with an "Overspeed error [E081]" if the feedback detection speed exceeds the over-speed detection level multiplied by the maximum frequency setting when [P003] = "Speed feedback (01)".<br>This setting is disabled if this is set to 0.0. | 0.0 to 150.0 (%) |
| [P027] | Speed deviation error detection level | Sets the level at which excessive speed deviation is detected. | 0.00 to 120.00 (Hz) |
| [P077] | Encoder disconnection timeout | Sets the time to detect an encoder disconnection. Disconnection detection is disabled if this is set to 0.0. | 0.0 to 10.0 (s) |
| [C021]<br>[C022]<br>[C026] | Output terminal function | Speed over deviation [DSE]:<br>The [DSE] signal turns on when the following conditions are met during operation.<br>\| [d001] - [d008] \| ≧ [P027] | 22 |

### Over-speed error detection

- If the feedback detection speed exceeds the "Over-speed detection level [P026]", the inverter will trip with an "Overspeed error [E81]". Set this to the maximum speed of the intended application.
  This function is enabled when "Pulse input, target function selection [P003]" is set to "Speed feedback (01)", and [P026] does not equal 0.0.

### Speed deviation error detection

- If the absolute value of speed deviation (output frequency - feedback detection speed) equals or exceeds the "Speed deviation error detection level [P027]" during operation, the " Speed over deviation [DSE] (22)" output turns ON. The inverter does not trip at this time. To enable this function, assign the [DSE] terminal to the output terminal, and set [P027] to a value other than 0.00.

### Encoder disconnection detection

- If the output frequency equals or exceeds the "Creep speed [P015]" and the feedback detection speed is less than the "Minimum frequency [b082]" for the duration of the "Encoder disconnection timeout [P077]", the inverter will trip with an "Encoder disconnection error [E80]". If a false detection occurs due to heavy loads and a slow startup, adjust [P015] and [P077] according to the intended application.

## A Confirmation after encoder wiring and related parameter settings

- Once complete, check the encoder wiring and related parameter settings by referring to the table below.
- Run the inverter in forward rotation and reverse rotation while checking the "Current position monitor [d030]" to confirm that it is counting correctly. (When using the simple position control function, set "Simple positioning selection [P012]" to "Simple positioning disabled (00)".)
- When the wiring and settings are correct, the [d030] display will add to the "Encoder constant [P011]" with each forward rotation of the motor, and subtract from the "Encoder constant [P011]" with each reverse rotation of the motor.
  (When the phase order of the R, S, and T phases of the inverter and the U, V, and W phases of the motor are wired correctly, and when the encoder output is a 90° phase shift pulse input, phase A will be in the 90° advance phase during forward rotation.)

| Event ▹ | Probable cause ▹ | Example of countermeasures |
|---|---|---|
| Forward and reverse rotation are reversed. | Motor or encoder wiring is reversed. | Check the motor wiring U, V, and W, and the encoder phase A and B wiring. If reversed, rewire correctly. |
| [d030] does not count. | Phase A/B pulse inputs from the encoder are not output correctly. | Check for abnormalities by measuring the voltage waveforms of the phase A and B wiring with a multimeter or similar device.<br>If the voltage waveform is abnormal, check the encoder power supply, wiring, disconnections, etc. |
| | Inverter settings are incorrect. | Refer to this section to set the inverter parameters correctly. |
| | The inverter's input circuit has failed. | Repair the inverter. |
| [d030] does not count when in forward rotation only, or when in reverse rotation only. | For phases A or B only, this is caused by the same phenomena as that described for "[d030] does not count" above. | Check the encoder outputs for phase A and B, and inverter inputs for phase A and B referring to the above. |
| | Pulse input cannot be counted correctly due to crosstalk between encoder A/B phase signal outputs. | Use shielded cables for the A/B phase wiring cables, and connect the shield to the L terminal. |

# 9.6 Speed/Torque Control According to Load

## 9.6.1 Speed Control and Torque Control

A

- The following two modes of high precision motor control are available for inverters, both of which can be used when the "Control mode selection [A044]" is set to "Sensorless vector control (SLV) (IM) (03)".

(1) Speed control: This method controls the output to produce torque at a constant speed by having the motor speed follow the speed command.

(2) Torque control: This method controls the output so that the output torque follows the torque command and remains constant regardless of speed.

!

- The torque-related functions described in this section are only available when using sensorless vector control. For details on configuring and adjusting sensorless vector control, refer to "9.5.7 Driving with Sensorless Vector Control".
- For the torque value of each function, the torque equivalent to the inverter's rated output current is used as the reference value (100%). Therefore, note that the absolute torque value will vary depending on the motor combination in use.

### Differences between speed control and torque control

| Control method | Speed control | Torque control |
|---|---|---|
| Operation description | "Speed control" is a control method in which the motor rotation speed follows a speed command. Therefore, the motor rotation speed is controlled to maintain a constant speed even when the load torque fluctuates. | "Torque control" is a control method in which the output torque follows the torque command. Therefore, the motor rotation speed fluctuates in response to changes in load torque. |

### Summary of speed/torque control-related functions

| Function | Summary | Control mode |
|---|---|---|
| Output torque monitor function | The "Output torque monitor [d012]" is used during sensorless vector control to monitor estimated output torque values. Further, analog output from the [Ao1] terminal, and pulse output from the [Ao2] terminal are also available. For details, refer to "9.16.3 Outputting Monitor Data by Pulse Output" and "9.16.4 Outputting Monitor Data by Analog Output". | Speed control<br>Torque control |
| Torque limit function | This controls the output torque of the motor to prevent it from exceeding the specified torque limit value, even if the load conditions change. This is used in applications where the absolute minimum amount of force is applied, such as in push operations. | Speed control<br>Torque control |
| Speed/torque control switching | This function switches between speed control and torque control. | Speed control<br>Torque control |
| Torque bias function | A separate torque bias value is added to the command torque during speed control or torque control. | Torque control |
| Torque control operation | This controls the output torque to follow the torque command value. This is used in applications where a constant torque is required, even if varying outside forces are applied, such as for winding machines and other applications where a constant tensile force must be maintained. In addition, a speed limit at torque control function can be set when in torque control mode, as the motor speed will continue to increase if the load becomes too light in relation to the torque command. | Torque control |

## 9.6.2 Driving with Limited Torque

**Q**

- How to limit output torque to prevent it from becoming excessively large?
- How to set a stopping point so that the system stops when the end point is reached?

**A**

- To enable the torque limit function during speed control, assign the "Torque limit enable [TL]" terminal to the input terminal and turn it on. Set the torque limit input source in "Torque limit selection [b040]".
- The "Torque limited [TRQ]" assigned to the output terminal is ON while the above torque limit function is in operation.

**!**

- If the "Torque limit enable [TL]" terminal is not assigned to an input terminal, the torque limit set by "Torque limit selection [b040]" is always enabled.
- If the "Torque limit enable [TL]" terminal is assigned to an input terminal and OFF, the torque limit is disabled.
- The motor may fail to start and the overload protection may trigger when using the torque limit function at low speeds. In this case, use the overload restriction function ([b021]/[b221]/[b024]) together. For details, refer to "9.9.1 Restriction to Avoid Overload".

| Code | Item | Description | Data |
|---|---|---|---|
| [d012] | Output torque monitor | Monitors the estimated output torque value. | -200 to +200 (%) |
| [b040] | Torque limit selection | Specified for each of the four quadrants individually. | 00 |
| | | Specified by the combination of [TRQ1]/[TRQ2] terminals. | 01 |
| | | Specified by analog voltage input from the [Ai1] terminal. | 02 |
| | | Specified from the option board. | 03 |
| [b041] | Torque limit 1 (Forward drive) | Sets the torque limit value. When [b040] is set to "4 quadrant individual setting (00)", forward drive/reverse regenerative/reverse drive/ forward regenerative are set individually. When [b040] is set to "Switched by terminal [TRQ1]/[TRQ2] (01)", the limit value specified for the terminal input combination is applied to all four quadrants. | 0 to 200% / no (Disable) |
| [b042] | Torque limit 2 (Reverse regenerative) | | |
| [b043] | Torque limit 3 (Reverse drive) | | |
| [b044] | Torque limit 4 (Forward regenerative) | | |
| [b045] | Torque limit LADSTOP selection | Disable | 00 |
| | | Enable: Temporarily suspend frequency deceleration during torque limit operation. | 01 |
| [C001] to [C007] | Input terminal function | Torque limit enable [TL]: Enables/disables the torque limit function. | 40 |
| | | Torque limit selection bit 1/2 [TRQ1]/[TRQ2]: When [b040] is set to " Switched by terminal [TRQ1]/[TRQ2] (01)", the torque limit is specified using this signal combination. | 41/42 |
| [C021] [C022] [C026] | Output terminal function | Torque limited [TRQ]: This signal turns ON while the torque limit function is in operation. | 10 |

## When "Torque limit selection [b040]" = "4 quadrant individual setting (00)"

- This mode is used to set the torque limit values at the four quadrants - forward power, forward regenerative, reverse power, and reverse regenerative - individually with "Torque limit 1 to 4 ([b041] to [b044])". The relationship between the four quadrants and torque limit values is shown in the figure below.

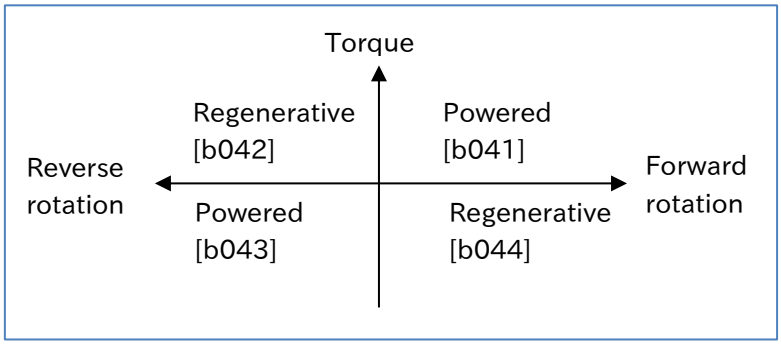


## When "Torque limit selection [b040]" = "Switched by terminal [TRQ1]/[TRQ2] (01)"

- As shown in the figure below, parameter settings selected from "Torque limit 1 to 4 ([b041] to [b044])" based on the combination of the "Torque limit selection bit 1 [TRQ1](41)" and " Torque limit selection bit 2 [TRQ2](42)" input terminal functions are set as the torque limit value in all operating conditions.

Example of input terminal assignment

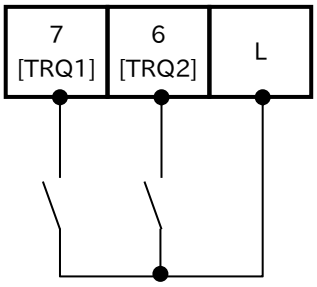


| [TRQ1] | [TRQ2] | Torque limit value |
|---|---|---|
| OFF | OFF | [b041] |
| ON | OFF | [b042] |
| OFF | ON | [b043] |
| ON | ON | [b044] |

## When "Torque limit selection [b040]" = "[Ai1] terminal input (02)"

- The torque limit value is specified by the voltage applied to the [Ai1] terminal (analog voltage) of the control terminal. A voltage input of 0 to 10 V corresponds to a torque limit value of 0 to 200%. The torque limit value entered is applied as the torque limit value for all operating conditions.
- When specifying a torque limit value with an analog voltage input, avoid setting other command (such as frequency command) inputs to analog inputs.

## When the "Torque limit selection [b040]" = "Option (03)"

- This setting is used to specify the torque limit value from the option board. For details, refer to the instruction manual of the option board.

## A Torque limit LADSTOP function

- When the torque limit function is activated or deactivated during deceleration and the motor experiences shocks from torque pulsation or another source, setting "Torque limit LADSTOP selection [b045]" to "Enable (01)" may improve the issue. This function temporarily stops deceleration to stabilize motor operation when the torque limit function is activated or deactivated.

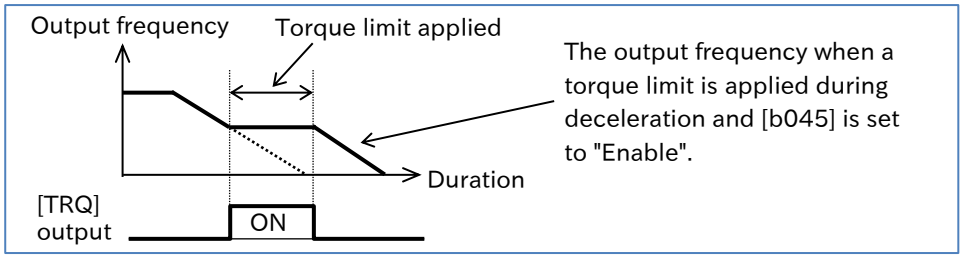


## A Outputting an I/O signal when the output torque increases or decreases

- Assign "Over-torque/under-torque [OTQ] (07)" to the output terminal to detect whenever the output torque goes above or below a preset level and output a signal.
  Use this to detect warnings before trip occurrence caused by abnormally large system loads.
- You can set the detection level of each of the four quadrants - forward power, forward regenerative, reverse power, and reverse regenerative.
- You can select whether to detect warning continuously during operation, or only at constant speeds (stop detection during acceleration or deceleration).

| Code | Item | Description | Data |
|---|---|---|---|
| [C054] | Over/Under-torque selection | Over-torque | 00 |
| | | Under-torque | 01 |
| [C055] | Over/Under-torque level (Forward power) | The output torque level of the [OTQ] signal output can be set for each of the four quadrants - forward power/forward regenerative/reverse power/reverse regenerative.<br>When [C054] is set to "Over-torque (00)", the [OTQ] output signal turns ON when the estimated output torque value exceeds the level settings.<br>The opposite applies if [C054] is set to "Under-torque (01)". | 0 to 200 (%) |
| [C056] | Over/Under-torque level (Reverse regenerative) | | |
| [C057] | Over/Under-torque level (Reverse power) | | |
| [C058] | Over/Under-torque level (Forward regenerative) | | |
| [C059] | Over/Under-torque output signal mode selection | Enable during running:<br>Continuously detect the [OTQ] signal during operation. | 00 |
| | | Only enable at constant speeds:<br>Only detect the [OTQ] signal at a constant speed, and not during acceleration/deceleration. | 01 |
| [C021]<br>[C022]<br>[C026] | Output terminal function selection | Over-torque/under-torque [OTQ]:<br>This signal turns ON when the estimated output torque value goes above or below [C055] to [C059]. | 07 |

Example: If [C054] is set to Over-torque (00)

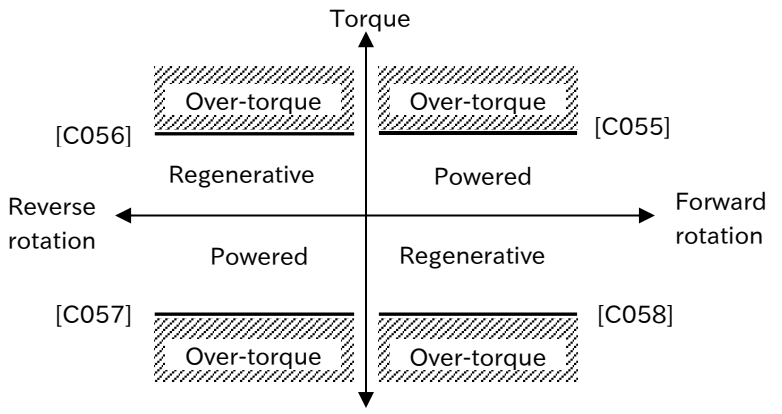

## 9.6.3 Driving by Torque Reference

**Q**

- How to control the motor to apply a constant torque?
- How to control the stopping point?
- How to apply a constant winding torque for a winding machine, or a similar device?

**A**

- For motor operation using torque control, assign "Permission of torque control [ATR] (52)" to the input terminal. Turn the [ATR] terminal ON to allow torque command input.
- Select the torque command value input source in "Torque reference input source selection [P033]".
- If [P033] is set to "Parameter setting (03)", set the torque command value with the "Torque reference [P034]". A torque command range of 0 to 200% is applied by an analog voltage 0 to 10 VDC input if [P033] is "[Ai1] terminal (00)", and an analog current 4 to 20 mA input if [P033] is "[Ai2] terminal (01)".
- Switching between normal frequency control (speed control) and torque control may cause shocks to the motor during operation due to differences in control. To reduce shock when switching, adjust the "Switching time of speed control to torque control [P041]". Lengthen this setting to alleviate shocks.

**!**

- As speed is determined in balance with the load when using torque control, the output speed increases if the actual output torque is lower in relation to the torque command. As such, set speed limits using "Speed limit at torque control (at Forward rotation) [P039]" and "Speed limit at torque control (at Reverse rotation) [P040]" to prevent runaway.

| Code | Item | Description | Data |
|---|---|---|---|
| [d009] | Torque reference monitor | Monitors the current torque command value. | -200 to +200 (%) |
| [P033] | Torque reference input source selection | The torque command is input by the analog voltage at the [Ai1] terminal. 0 to 10 VDC is 0 to 200% torque. | 00 |
| | | The torque command is input by the analog current at the [Ai2] terminal. 4 to 20 mA is 0 to 200% torque. | 01 |
| | | The torque command value is specified by the [P034] setting. | 03 |
| | | The torque command value is specified from the option board. | 06 |
| [P034] | Torque reference | Sets the torque command value when [P033] is set to "Parameter setting (03)". | 0 to 200 (%) |
| [P039] | Speed limit at torque control (Forward rotation) | Sets the speed limit value on the forward rotation side during torque control. | 0.00 to 120.00 (Hz) |
| [P040] | Speed limit at torque control (Reverse rotation) | Sets the speed limit value on the reverse rotation side during torque control. | 0.00 to 120.00 (Hz) |
| [P041] | Switching time of speed control to torque control | Sets the time to switch between speed control and torque control. Set this to longer durations to reduce shock when switching. | 0 to 1000 (ms) |
| [C001] to [C007] | Input terminal function | Permission of torque control [ATR]: When this signal is ON, the control switches to torque control. | 52 |

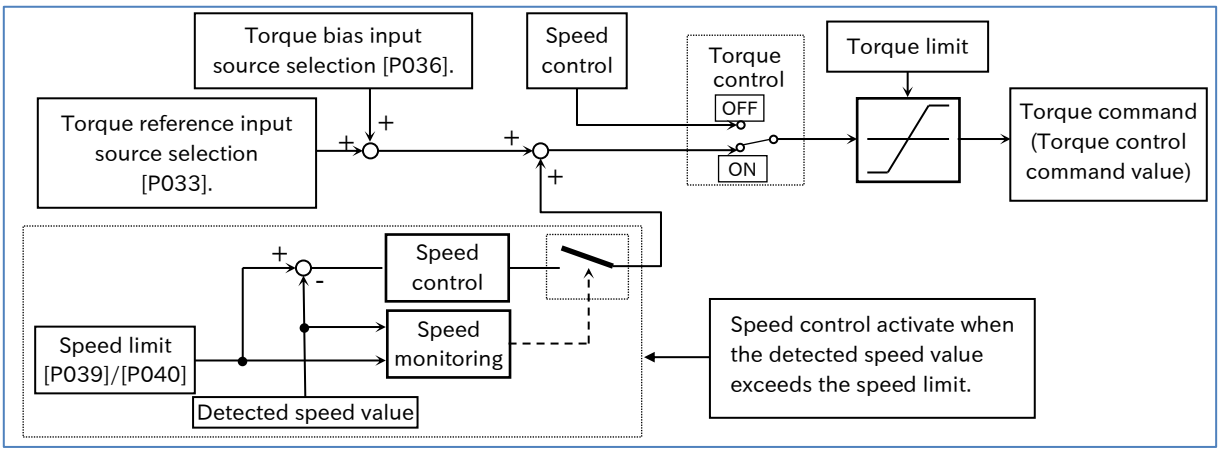

## 9.6.4 Driving with Torque Bias

Q

- How to temporarily add torque when using torque control to operate an extrusion machine, winding machine, or similar equipment?

A

- The torque bias function adds a bias value to torque commands when using torque control for motor operation with the " Permission of torque control [ATR] (52)" terminal ON.
- The torque bias value can switch the direction in which torque is added by switching the forward rotation/reverse rotation direction of the RUN command with the "Torque bias polarity selection [P038]" setting.

- If [P038] is "According to sign (00)":
  Torque is increased in the direction of forward rotation when the torque bias value is (+), and increased in the direction of reverse rotation when the torque bias value is (-), regardless of the direction of operation.

- If [P038] is " Depending on the operation direction (01)":
  The torque bias value is added with the direction of the RUN command as (+).
  If the RUN command is forward rotation:
  When the torque bias value is (+), the forward rotation torque increases.
  When the torque bias value is (-), the reverse rotation torque increases.
  If the RUN command is reverse rotation:
  When torque bias value is (+), the reverse rotation torque increases.
  When the torque bias value is (-), the forward rotation torque increases.

!

- For the set torque value, the torque equivalent to the inverter's rated output current is used as the reference value (100%). Therefore, note that the absolute torque value will vary depending on the motor combination in use.

| Code | Item | Description | Data |
|---|---|---|---|
| [d010] | Torque bias monitor | Monitors the current torque bias value. | -200 to +200 (%) |
| [P036] | Torque bias input source selection | None | 00 |
| | | Parameter setting | 01 |
| | | Option | 05 |
| [P037] | Torque bias value | Sets the torque bias value when [P036] is set to "Parameter setting (01)". | -200 to +200 (%) |
| [P038] | Torque bias polarity selection | According to sign:<br>Add a torque bias in the direction of forward rotation when the torque bias value is (+), and in the direction of reverse rotation when the torque bias value is (-). | 00 |
| | | Depending on the operation direction:<br>The torque bias value is added with the direction of the RUN command as (+). | 01 |

# 9.7 Selecting Start/Stop Modes

## 9.7.1 Starting with Gradually Increasing Voltage

**Q**

- How to reduce the overcurrent at start when the minimum frequency is raised to generate torque?

**A**

- This function gradually increases the voltage while outputting the minimum frequency when the motor starts.
- If you want to prevent a current jump at start or an overcurrent trip occurs at start, increase the value of "Reduced voltage start time [b036]".

**!**

- If you want to increase torque at start or the like, reduce the [b036] setting. However, a smaller setting results in a start similar to a full-voltage start, which is more prone to an overcurrent trip.
- This function is effective when the control method is V/f control.

| Code | Item | Description | Data |
|---|---|---|---|
| [b036] | Reduced voltage start time | The output voltage is increased over a set time from the start of operation until the voltage command equivalent to the minimum frequency. | 0 (Short time) to 255 (Long time) |
| [b082] | Minimum frequency | The frequency at which the inverter output starts when the RUN command is turned ON. | 0.00 to 10.00 (Hz) |

■ (Example 1) When the reduced voltage start time is 0 ([b036] = 0)

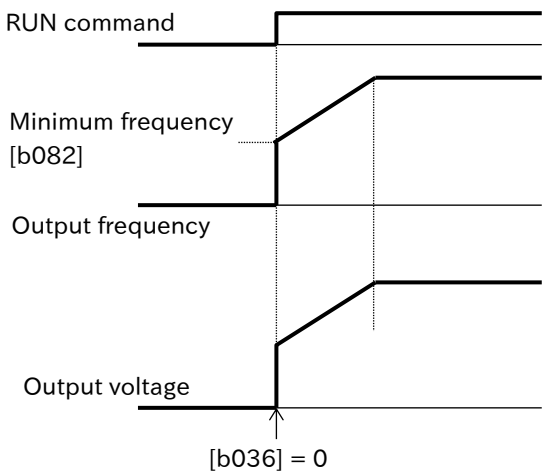


■ (Example 2) When the reduced voltage start time is not 0 ([b036] ≠ 0)

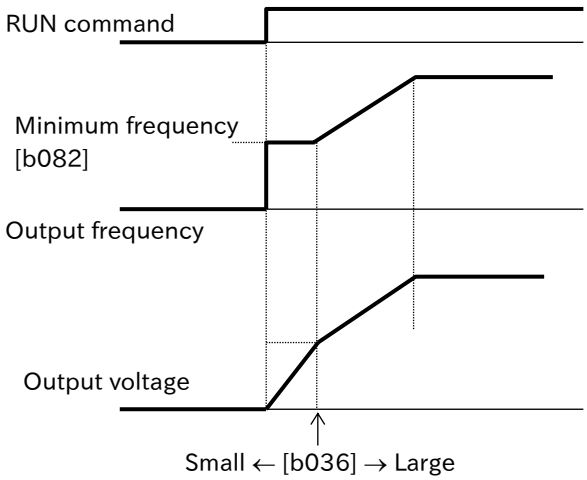

## 9.7.2 Starting with DC Braking

**Q**

- How to start operation after stopping the rotating fan?
- How to start operation after stopping the motor rotation?

**A**

- By performing "External DC braking [DB](07)" before outputting a frequency to the motor, you can start operation after stopping the motor rotation.
- The following settings are required for DC braking at start.
  - Set "DC braking selection [A051]" to "Enable (01)".
  - Set the required braking force for "DC braking force at start [A057]".
  - Set a value other than 0.0 for "DC braking active time at start [A058]".
- DC braking at start is performed for the time set in "DC braking active time at start [A058]" after the RUN command is applied.

**!**

- Set and operate the DC braking force at start and DC braking active time at start, paying attention to motor heating.
- When "Enable (Output frequency < [A052]) (02)" is set for "DC braking selection [A051]", regardless of whether the product is starting or stopping, DC braking starts when both the frequency command and output frequency are at or below the "DC braking frequency [A052]". In such a case, "DC braking force [A054]" is enabled, regardless of whether the product is starting or stopping, and both "DC braking force at start [A057]" and "DC braking active time at start [A058]" will be disabled. For details, refer to "9.7.8 Stopping with DC Braking".
- If "Carrier Frequency [b083]" is 2 kHz or greater, the DC braking force is limited. For details, refer to "9.7.8 Stopping with DC Braking".

| Code | Item | Description | Data |
|---|---|---|---|
| [A051] | DC braking selection | Internal DC braking: Enable | 01 |
| | | Internal DC braking: Enable (Output frequency < [A052]) | 02 |
| [A052] | DC braking frequency | Sets the level of frequency at which DC braking is performed when "Enable (Output frequency < [A052]) (02)" is selected for [A051]. | 0.00 to 60.00 (Hz) |
| [A054] | DC braking force | Sets the braking force for when DC braking is performed when "Enable (Output frequency < [A052]) (02)" is selected for [A051]. | 0 to 100 (%) (ND mode)<br>0 to 70 (%) (LD mode) |
| [A057] | DC braking force at start | Adjusts the DC braking force at start when "Enable (01)" is selected for [A051]. When this is set to 100%, the maximum braking force is applied.<br>0 % (Weak: zero current) ⇔ 100 % (Strong: rated current) | 0 to 100 (%) (ND mode)<br>0 to 70 (%) (LD mode) |
| [A058] | DC braking time at start | Sets the DC braking time at start when "Enable (01)" is selected for [A051]. | 0.0 to 60.0 (s) |

■ Operation of DC braking at start ([A051] = 01)

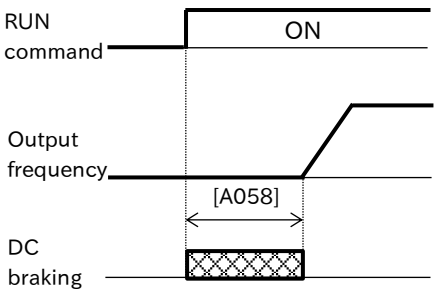


* If a frequency command higher than [A052] is set before operation, as shown in the figure on the right (Example 1), DC braking at start is not performed.

■ Operation of frequency command DC braking ([A051] = 02)

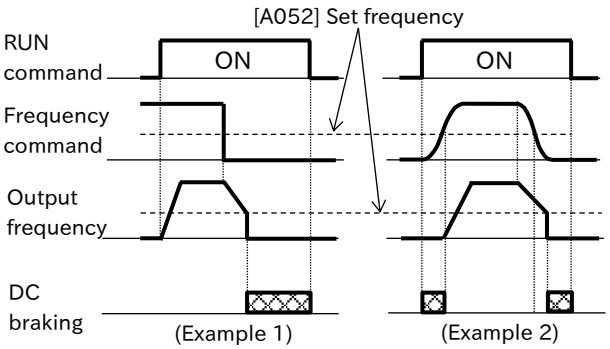


* As shown in the figure on the right (Example 2), if the RUN command is turned ON while the frequency command and output frequency are at or less than [A052] at start due to an analog frequency command or the like, then the DC braking will start. When the frequency command reaches [A052] + 2 Hz or more, the DC braking is released and normal operation begins.

## 9.7.3 Starting with Frequency Matching

Q

- How to start the inverter at a frequency command that corresponds to the speed of the motor, which is idling?
- How to restart the inverter to match the frequency for the speed of the motor, which is idling, when there is a trip retry, free run stop, or reset, or when the power is turned on?

A

- When the frequency matching restart is selected as restart function, the same operation when "Active frequency matching restart" is selected in each restart method selection and "Active frequency matching restart speed selection [b030]" is set to "Output frequency at shut down (00)" is performed.
  The frequency matching restart function can be set for each of the following functions.
  - Instantaneous power failure / undervoltage restart ([b001] = 02)
  - Overcurrent/overvoltage restart ([b008] = 02)
  - Restart after free-run release ([b088] = 01)
  - Restart after reset release or powering-on ([C103] = 01)
- For the details of operation when frequency matching restart is selected for one of the above functions, refer to "9.7.4 Starting with Active Frequency Matching".

!

- When "RUN command input source selection [A002]" is set to "Keypad (RUN-key) (02)", the RUN command is also turned off when "Free-run [FRS]" or "Reset [RS]" is turned on. At this time, if restart after free-run release or restart after reset release is set, pressing the RUN key on the keypad to start operation starts the retry operation. In the case of an instantaneous power failure/undervoltage restart or an overvoltage/overcurrent restart, the RUN command remains on.
- For more details about the restart functions, refer to "9.9 Using Trip Prevention Functions".

## 9.7.4 Starting with Active Frequency Matching

**Q**

- How to start the inverter so that it quickly follows the command frequency regardless of the rotation speed frequency when the motor is idling?
- How to have the inverter follow the frequency command quickly during trip retry, free run stop, reset, and supplying power, etc.?

**A**

- The active frequency matching restart function allows the motor to quickly pull from idle motor rotation speed to a set frequency and restart while suppressing current increase. For more details on this operation, refer to "(Example 1) Active frequency matching restart ".
- The active frequency matching function can be set for each of the following functions.
  - Instantaneous power failure/undervoltage restart ([b001] = 04)
  - Overcurrent/overvoltage restart ([b008] = 04)
  - Restart after free-run release ([b088] = 02)
  - Restart after reset release or powering-on ([C103] = 02)

**!**

- When restarting after free-run release or reset release, the inverter restarts once the free-run or reset is released, and the standby duration set in the "Retry wait time after instantaneous power failure/undervoltage error [b003]" since the RUN command turns on has elapsed.
- The active frequency matching restart function is only available with induction motor drives.
- When the RUN command input source is set to the RUN key on the keypad, the RUN command is turned off when "Free run stop [FRS]" or "Reset [RS]" is turned on. If restart after free-run release or restart after reset release is set, pressing the RUN key on the keypad to start operation will start the retry operation. In case of an instantaneous power failure, undervoltage, overvoltage, or overcurrent retry operation, the RUN status from the keypad is maintained.

| Code | Item | Description | Data |
|---|---|---|---|
| [b028] | Active frequency matching restart level | Sets the current limit value at the active frequency matching restart. | (0.2 to 2.0) × rated current (A) (ND mode)<br>(0.2 to 1.5) × rated current (A) (LD mode) |
| [b029] | Active frequency matching restart constant (speed) | Sets the deceleration time when the current is increased. | 0.1 to 3000.0 (s) |
| [b030] | Active frequency matching restart speed selection | Starts at the frequency of the previous output interruption. | 00 |
| | | Starts at the maximum frequency setting. | 01 |
| | | Starts at the current command frequency. | 02 |

■ (Example 1) Active frequency matching restart

(1) Output will start at the frequency set by [b030] after the retry wait time elapses.

(2) Meanwhile, output power is gradually increased to prevent the occurrence of overcurrent and other issues. (Dashed line in the figure on the left)

(3) If the output current exceeds [b028], deceleration occurs in the output frequency as per [b029] to suppress the output current.

(4) Normal operation is possible when the output frequency and output voltage counterbalance each other.

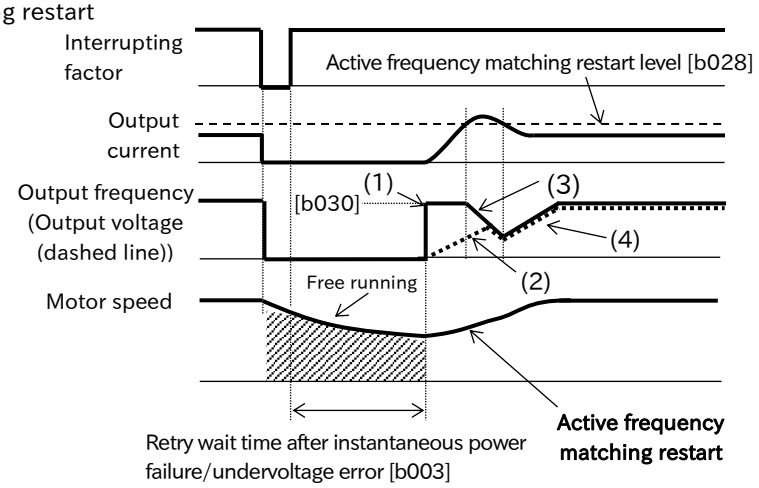

## A Active frequency matching restart at instantaneous power failure/undervoltage ([b001] = 04)

- To perform an active frequency matching restart when an instantaneous power failure/undervoltage occurs, set the "Restart mode selection after instantaneous power failure/undervoltage error [b001]" to "Active frequency matching restart (04)".
- Even when the active frequency matching restart is set, a trip occurs if the instantaneous power failure/undervoltage time exceeds the "Instantaneous power failure/undervoltage allowed time [b002]".

| Code | Item | Description | Data |
|---|---|---|---|
| [b001] | Restart mode selection after instantaneous power failure/undervoltage error | Performs the active frequency matching restart. | 04 |
| [b002] | Instantaneous power failure/undervoltage allowed time | If the power returns within this set time, the inverter restarts. (Example 2)<br>If the instantaneous power failure/undervoltage lasts for longer than this set time, the inverter will trip. (Example 3) | 0.3 to 25.0 (s) |
| [b003] | Retry wait time after instantaneous power failure/undervoltage error | Sets the wait time from when the power returns until the restart. | 0.3 to 100.0 (s) |
| [b005] | Number of retries after instantaneous power failure/undervoltage | 16 times:<br>The inverter restarts up to the 16th instantaneous power failure/undervoltage, but trips for the 17th time and thereafter. (The count is cleared by a reset input or power interruption.) | 00 |
| | | Unlimited: No trips occur. | 01 |
| [b028] | Active frequency matching restart level | Sets the current limit value at the active frequency matching restart. | (0.2 to 2.0) × rated current (A) (ND mode)<br>(0.2 to 1.5) × rated current (A) (LD mode) |
| [b029] | Active frequency matching restart constant (speed) | Sets the deceleration time when the current is increased. | 0.1 to 3000.0 (s) |
| [b030] | Active frequency matching restart speed selection | Starts at the frequency of the previous power interruption. | 00 |
| | | Starts at the maximum frequency setting. | 01 |
| | | Starts at the current command frequency. | 02 |

■ (Example 2) When power returns within the permissible time [b002]

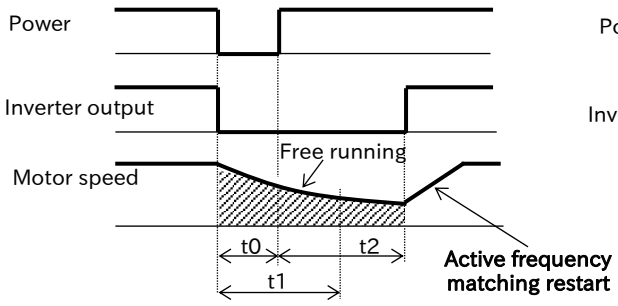


■ (Example 3) When power returns after the permissible time [b002]

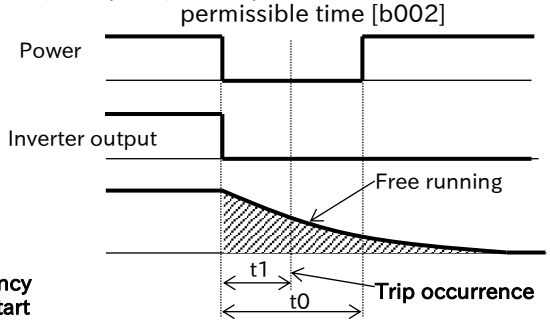


t0: Instantaneous power failure/undervoltage time,
t1: "Instantaneous power failure/undervoltage allowed time [b002]",
t2: "Retry wait time after instantaneous power failure/undervoltage error [b005]"

- "Enable instantaneous power failure/undervoltage error while in stop status [b004]" can be used to disable instantaneous power failure/undervoltage errors while the inverter is stopped or decelerating due to the RUN command being turned off. However, even if you use [b004] to disable the instantaneous power failure/undervoltage trips during stop, the inverter trips if the instantaneous power failure/undervoltage time exceeds the "Instantaneous power failure/undervoltage allowed time [b002]".
- Even if the restart is set, an "Undervoltage error [E09]" trip occurs if the instantaneous power failure/undervoltage continues for approximately 40 seconds.
- If the inverter control microcomputer is not supplied power because the power interruption lasts for a long time, the inverter operates by restarting after reset release instead of the instantaneous power failure/undervoltage restart.

## A Active frequency matching restart at over current/overvoltage ([b008] = 04)

- To perform the active frequency matching restart when an overcurrent/overvoltage occurs, set the "Restart mode selection after overvoltage/overcurrent error [b008]" to "Active frequency matching restart (04)".
- If restart is selected for when there was an overcurrent/overvoltage, the restart is performed only for the number of times set in "Number of retries after overvoltage/overcurrent [b010]", and the inverter trips the next time.

| Code | Item | Description | Data |
|---|---|---|---|
| [b008] | Restart mode selection after overvoltage/ overcurrent error | Performs the active frequency matching restart. | 04 |
| [b010] | Number of retries after overvoltage/overcurrent | Sets the number of retries for when there is an overvoltage/ overcurrent. | 1 to 3 (times) |
| [b011] | Retry wait time after overvoltage/overcurrent error | Sets the wait time from when the error occurrence until the restart. | 0.3 to 100.0 (s) |
| [b028] | Active frequency matching restart level | Sets the current limit value at the active frequency matching restart. | (0.2 to 2.0) × rated current (A) (ND mode)<br>(0.2 to 1.5) × rated current (A) (LD mode) |
| [b029] | Active frequency matching restart constant (speed) | Sets the deceleration time when the current is increased. | 0.1 to 3000.0 (s) |
| [b030] | Active frequency matching restart speed selection | Starts at the frequency of the previous power interruption. | 00 |
| | | Starts at the maximum frequency setting. | 01 |
| | | Starts at the current command frequency. | 02 |

■ (Example 4) Active frequency matching restart when there was an overcurrent

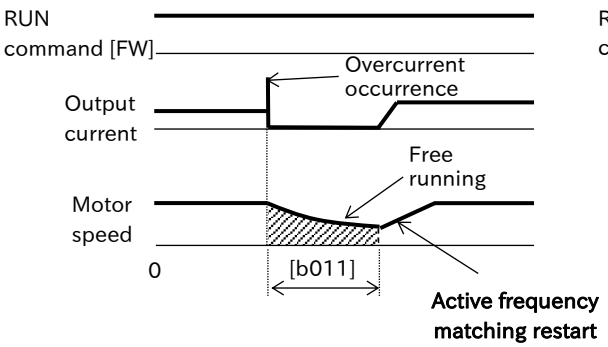


■ (Example 5) Active frequency matching restart when there was an overvoltage during deceleration

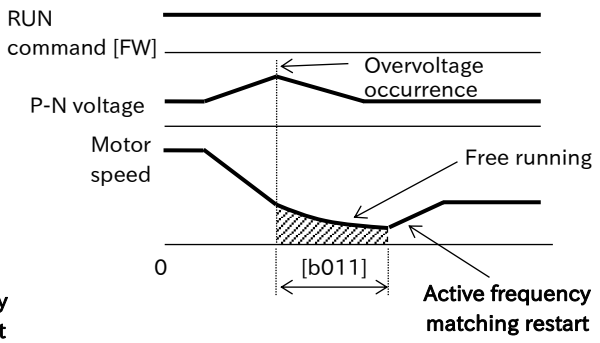


- Even when the retry operation is selected for a trip, if the trip factor has not been released after the retry wait time, the trip is detected again. In this case, increase the retry wait time.

## A Active frequency matching restart after free run release/reset release ([b088] = 02, [C103] = 02)

- To perform the active frequency matching restart after releasing a free run stop, set the "Restart mode after FRS release [b088]" to "Active frequency matching restart (02)".
- To perform an active frequency matching restart after a reset release, set the "Restart mode after RS release [C103]" to "Active frequency matchin restart (02)".
- When the retry wait time has elapsed after the "Free run stop [FRS] (11)" terminal turned off, the active frequency matching restart is performed without stopping the motor.
- If an overcurrent trip occurs during the active frequency matching restart, increase the retry wait time.

| Code | Item | Description | Data |
|---|---|---|---|
| [b088] | Restart mode after FRS release | Performs the active frequency matching restart. | 02 |
| [b003] | Retry wait time after instantaneous power failure/undervoltage error | Sets the wait time from a free run stop release or a reset release until the restart. | 0.3 to 100.0 (s) |
| [b028] | Active frequency matching restart level | Sets the current limit value at the active frequency matching restart. | (0.2 to 2.0) × rated current (A) (ND mode)<br>(0.2 to 1.5) × rated current (A) (LD mode) |
| [b029] | Active frequency matching restart constant (speed) | Sets the deceleration time when the current is increased. | 0.1 to 3000.0 (s) |
| [b030] | Active frequency matching restart speed selection | Starts at the frequency of the previous power interruption. | 00 |
| | | Starts at the maximum frequency setting. | 01 |
| | | Starts at the current command frequency. | 02 |
| [C103] | Restart mode after RS release | Performs the active frequency matching restart. | 02 |

■ (Example 6) Active frequency matching restart after free run/reset release

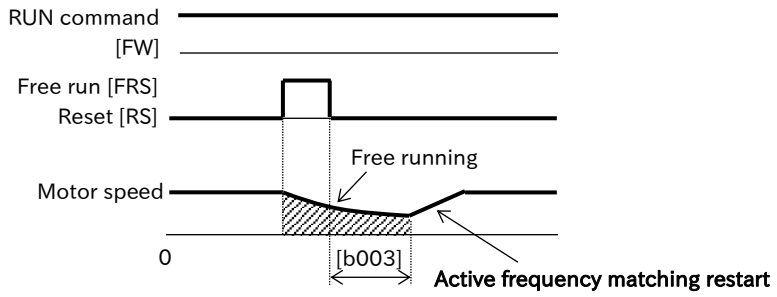


- If restart after reset release is set to active frequency matching restart, power-up startup also operates in active frequency mathing.

■ (Example 7) Active frequency matching restart at power-up startup

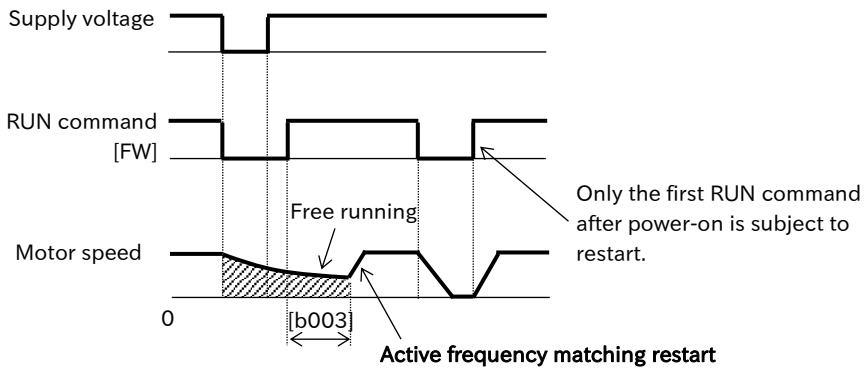

## 9.7.5 Starting after Trip Reset or Power-on

**Q**

- How to restart the inverter to match the rotation speed of the motor when idling after a trip reset, or when the power is turned on?
- As the brake is applied after a trip reset, or when the power is turned on, how to start the inverter from 0 Hz?

**A**

- Use "Restart mode after RS release [C103]" to choose either 0 Hz restart, frequency matching restart*1, or active frequency matching restart*2 as the starting method after a trip reset, or when the power is turned on.
- In case of a 0 Hz restart, there is no retry wait time setting.

**!**

- The starting method used when turning the power on, and when restarting after a trip reset release, share the same settings.
- When performing the active frequency matching restart, the RUN command direction when starting the active frequency matching operation is the same as the RUN command direction at the time of reset input.

| Code | Item | Description | Data |
|---|---|---|---|
| [b003] | Retry wait time after instantaneous power failure/undervoltage error | Sets the wait time from when the power returns until the restart. | 0.3 to 100.0 (s) |
| [C103] | Restart mode after RS release | Performs a 0Hz restart. | 00 |
| | | Performs the frequency matching restart (= Active frequency matching restart at the frequency of the previous output interruption). | 01*1 |
| | | Performs the active frequency matching restart. | 02*2 |

■ (Example 1) Example of operation during stop, and after turning on the power/reset (C103=00)

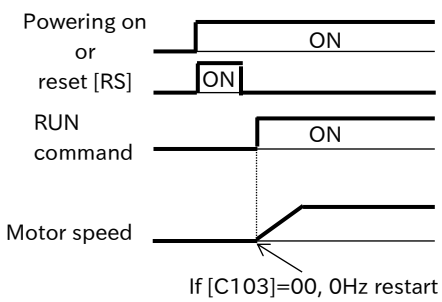


■ (Example 2) Example of operation during stop, and after turning on the power/reset (C103=01 or 02)

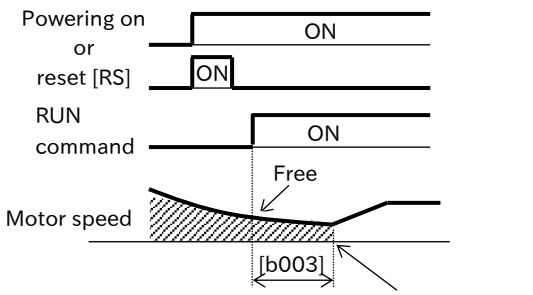


* Turn the power on or reset, and then turn the RUN command on to turn on the inverter to operate according to the [C103] setting.

■ (Example 3) Example of operation when the [RS] terminal is turned off during operation (C103=00)

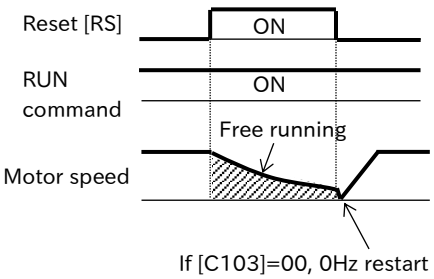


■ (Example 4) Example of operation when the [RS] terminal is turned off during operation (C103=01 or 02)

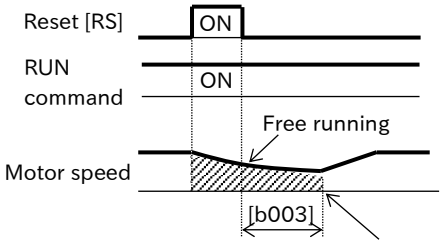


[C103]=01: **Frequency matching restart**
[C103]=02: **Active frequency matching restart**

*1. For details, refer to "9.7.3 Starting with Frequency Matching".
*2. For details, refer to "9.7.4 Starting with Active Frequency Matching".

## 9.7.6 Starting after Free Run Stop

**Q**

- How to restart the inverter to match the rotation speed of the motor when idling after a free run stop?
- The brakes are applied when stopping while the stopping method is set to free run stop. How to start the inverter from 0 Hz?

**A**

- Use "Restart mode after FRS release [b088]" to choose either 0 Hz restart, frequency matching restart[*1], or active frequency matching restart[*2] as the starting method when the "Free run stop [FRS](11)" terminal is turned from on to off.
- If the "STOP mode selection [b091]" is set to "Free run stop (01)", and the RUN command [OFF] (stop command) is applied, the inverter enters the free run stop state, and the settings configured in "Restart mode after FRS release [b088]" will apply the next time the inverter is in operation. For details on "STOP mode selection [b091]", refer to "9.7.7 Selecting Stop Operation".
- In case of a 0 Hz restart, there is no retry wait time setting.

**!**

- When performing the active frequency matching restart, the RUN command direction when starting the active frequency matching operation is the same as the RUN command direction at the time of reset input.

| Code | Item | Description | Data |
|---|---|---|---|
| [b003] | Retry wait time after instantaneous power failure/undervoltage error | Sets the wait time from when the power returns until the restart. | 0.3 to 100.0 (s) |
| [b088] | Restart mode after FRS release | Performs a 0 Hz restart. | 00 |
| | | Performs the frequency matching restart (= Active frequency matching restart at the frequency of the previous output interruption). | 01[*1] |
| | | Performs the active frequency matching restart. | 02[*2] |

■ (Example 1) Example of operation when the "STOP mode selection [b091]" is set to "Free run stop (01)"

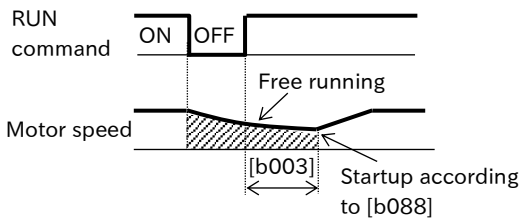


■ (Example 2) Example of operation when the [FRS] terminal is turned on and off while the inverter is stopped

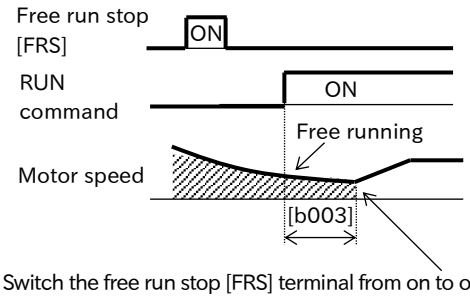


* Switch the free run stop [FRS] terminal from on to off while the inverter is stopped, and then turn the RUN command on to start operation according to the [b088] setting.
(In case of 0Hz restart, there is no wait time.)

■ (Example 3) Example of operation when the [FRS] terminal is turned on and off during operation (b088 = 00)

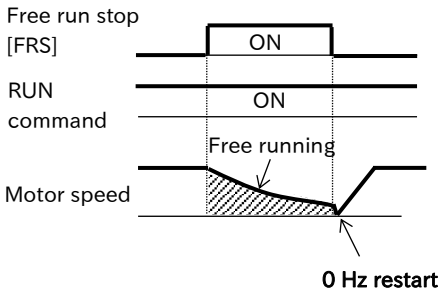


■ (Example 4) Example of operation when the [FRS] terminal is turned on and off during operation (b088 ≠ 00)

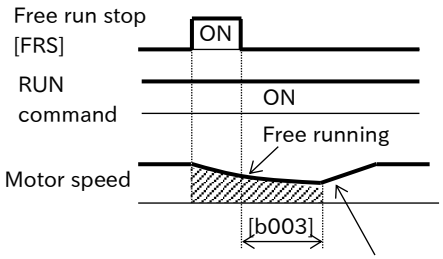


[b088]=01: **Frequency matching restart**
[b088]=02: **Active frequency matching restart**

## 9.7.7 Selecting Stop Operation

**Q**

- How to perform a free run stop to avoid overvoltage trips from occurring during deceleration due to significant load inertia?
- How to shut-off output from the inverter immediately as a mechanical brake is used for stopping?

**A**

- Use "STOP mode selection [b091]" to choose either to stop the inverter by decelerating to a stop according to the deceleration time setting, or by putting the inverter in a free run state by immediately shutting off inverter output.
- To perform a free run stop using the control circuit terminal input signal, assign "Free run stop [FRS] (11)" to one of the input terminals.
- If the inverter performs a free run stop, the next startup when an RUN command is input will follow the selection made for "Restart mode after FRS release [b088]".

**!**

- When "Free run stop (01)" is selected for [b091], the inverter output is shut off at the timing when the RUN command is turned off, and the motor will start idling.

| Code | Item | Description | Data |
|---|---|---|---|
| [b091] | STOP mode selection | The inverter decelerates to a stop as normal when stopping. | 00 |
| | | Inverter output is shut off to perform a free run stop when stopping. | 01 |
| [C001] to [C007] | Input terminal function | Free run stop [FRS]:<br>When this signal is turned on, inverter output is shut-off to perform a free run stop. | 11 |

■ (Example 1) Example of operation when the "STOP mode selection [b091]" is set to "Free run stop (01)"

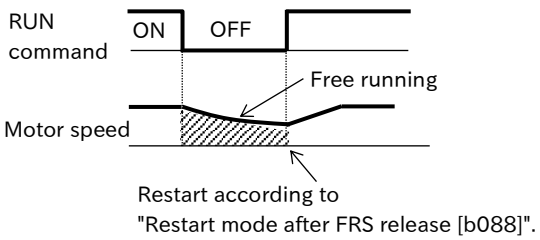


■ (Example 2) Example of operation when the [FRS] terminal is turned off

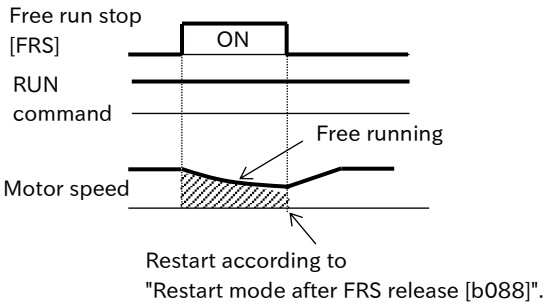

## 9.7.8 Stopping with DC Braking

**Q**

- How to bring the inverter to a complete stop when the motor does not completely stop due to external forces and a large load inertia?

**A**

- When stopping, you can stop motor rotation by applying DC braking (DB).
- There are three ways to apply DC braking (DB) when stopping.
  - External DC braking:
    This method involves assigning of "External DC braking [DB](07)" to the input terminal to control DC braking by turning the [DB] terminal on and off. This is only available when [A051] is set to "Disable(00)" or "Enable(01)".
  - DC braking when stopping (Internal DC braking):
    This sets [A051] to "Enable (01)".
    This method starts DC braking when decelerating to a stop after turning the RUN command off once the frequency falls below the "DC braking frequency [A052]".
  - Frequency command DC braking (Internal DC braking):
    This sets [A051] to "Enable (Output frequency < [A052]) (02)".
    This method starts DC braking when the frequency command value and output frequency fall below the "DC braking frequency [A052]".

**!**

- Set and operate the "DC braking force [A054]" and "DC braking active time at stop [A055]", paying attention to the heat generated by the motor.
- When "Enable (Output frequency < [A052]) (02)" is set for "DC braking selection [A051]", DC braking starts when both the frequency command and output frequency are at or below the "DC braking frequency [A052]", even at startup. For details, also refer to "9.7.2 Starting with DC Braking".
- When performing DC braking using the "External DC braking [DB] (07)" terminal, an overcurrent or overvoltage error may occur during use at high output frequencies, or for large inertia loads.

| Code | Item | Description | Data |
|---|---|---|---|
| [A051] | DC braking selection | Internal DC braking: Disable | 00 |
| | | Internal DC braking: Enable | 01 |
| | | Internal DC braking: Enable (Output frequency < [A052]) | 02 |
| [A052] | DC braking frequency | When [A051] is set to " Enable (01)", DC braking is applied when the frequency falls below this setting when decelerating to a stop. | 0.00 to 60.00 (Hz) |
| [A053] | DC braking delay time | The delay time until DC braking is applied after either the [DB] terminal is turned on, or the "DC braking frequency [A052]" is reached. During this period, the system is free running (output shutdown). | 0.0 to 5.0 (s) |
| [A054] | DC braking force | Adjusts the DC braking force. When this is set to 100%, the maximum braking force is applied.<br>0 % (Weak: zero current) ⇔ 100 % (Strong: rated current) | 0 to 100 (%) (ND mode)<br>0 to 70 (%) (LD mode) |
| [A055] | DC braking active time at stop | Sets the DC braking time when [A056] is set to "Edge operation". | 0.0 to 60.0 (s) |
| [A056] | DC braking operation method selection | Edge operation:<br>DC braking is applied for the duration set by [A055]. (Examples of operation 1-a to 7-a). | 00 |
| | | Level operation:<br>DC braking is performed only when set conditions are met. (Examples of operation 1-b to 7-b). | 01 |
| [C001] to [C007] | Input terminal function | External DC braking [DB]:<br>DC braking is applied when this signal is on. This only applies when the "DC braking selection [A051]" = 00, 01. | 07 |

## DC braking force and carrier frequency

- If "Carrier Frequency [b083]" is greater than 2 kHz, the DC braking force is limited as shown in the figure below.

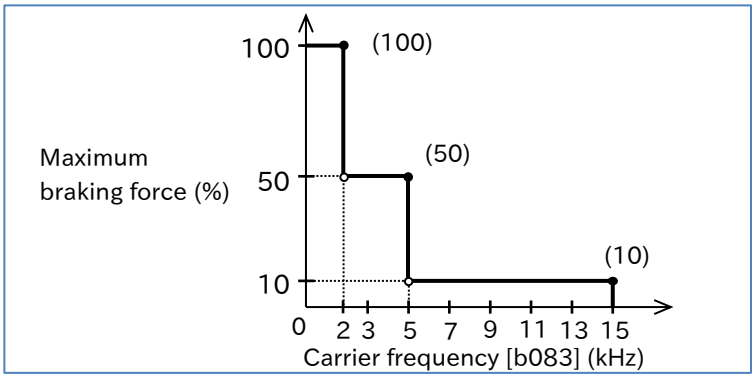


## DC braking using the "External DC braking [DB]" terminal

- When applying DC braking using input signals from the control terminal, assign "External DC braking [DB] (07)" to the input terminal.
- DC braking using the [DB] terminal is only available when the "DC braking selection [A051]" = 00, 01. DC braking is activated when the [DB] terminal is turned on, regardless of the RUN command.
- DC braking operation varies depending on the edge operation/level operation settings in the "DC braking operation method selection [A056]". Configure edge operation or level operation settings to match the system in use, referring to the operation examples provided in the figure below. When edge operation is selected, set the "DC braking active time at stop [A055]".

■ (Example 1) Turning the [DB] terminal ON/OFF during operation.

(Example 1-a) [A056] = "Edge operation (00)"

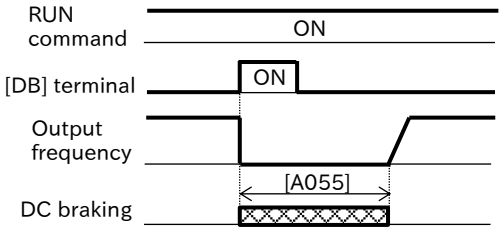


(Example 1-b) [A056] = "Level operation (01)"

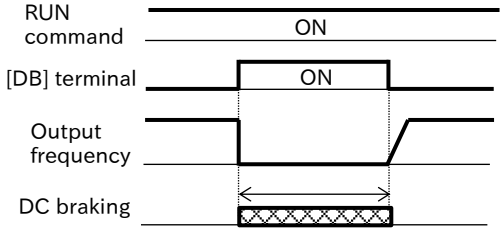


* In the case of edge operation, DC braking is applied for the duration of the [A055] setting from the ON edge input on the [DB] terminal. In the case of level operation, DC braking is applied while the [DB] terminal is on.

■ (Example 2) When turning [DB] terminal on/off during inverter deceleration when the RUN command is off. The [A053] setting is 0.0 (s).

(Example 2-a) [A056] = "Edge operation (00)"

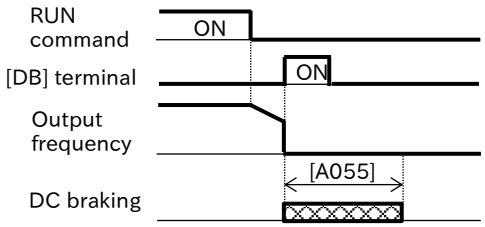


(Example 2-b) [A056] = "Level operation (01)"

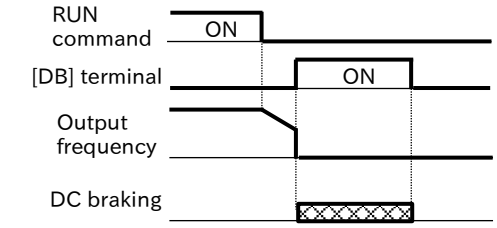


* When the "DC braking delay time [A053]" is 0.0 (s), DC braking is immediately applied when the [DB] terminal is turned on.

■ (Example 3) When the "DC braking delay time [A053]" is set to a value other than 0.0 (s), and the same operation as that described in (Example 2) above is performed.

(Example 3-a) [A056] = "Edge operation (00)"

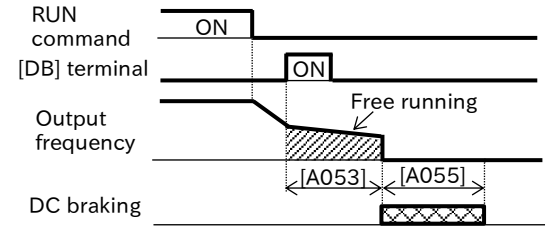


(Example 3-b) [A056] = "Level operation (00)"

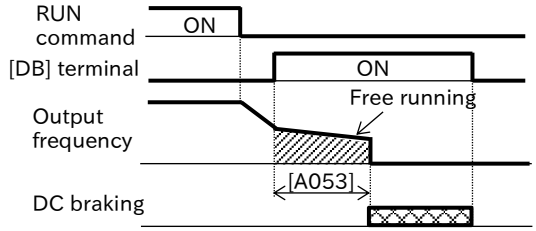


* If a value other than 0.0 (s) is set as the "DC braking delay time [A053]", DC braking is applied after free run (output shutdown) for the allotted time. However, DC braking is immediately applied if the [DB] terminal is turned on when the inverter is stopped.

## A DC braking when stopping ([A051] = "Enable (01)")

- DC braking can be applied when the inverter is stopped without the use of the [DB] terminal.
- To perform DC braking when stopping, set the "DC braking selection [A051]" to "Enable (01)", and then set the "DC braking frequency [A052]".
- DC braking operation will vary depending on the edge operation/level operation settings in the "DC braking operation method selection [A056]". If the "DC braking delay time [A053]" is set to a value other than 0.0, free run stop (output shutdown) is performed before DC braking is applied. Configure edge operation or level operation settings to match the system in use, referring to the operation examples provided in the figure below. When edge operation is selected, set the "DC braking active time at stop [A055]".

■ (Example 4) Turning the RUN command on and off. The [A053] setting is 0.0 (s).

(Example 4-a) [A056] = "Edge operation (00)"

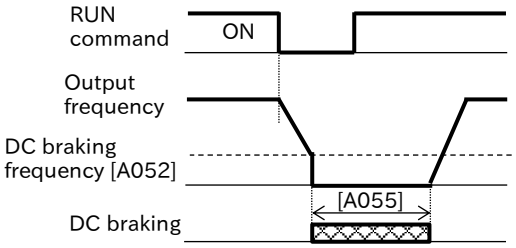


(Example 4-b) [A056] = "Level operation (01)"

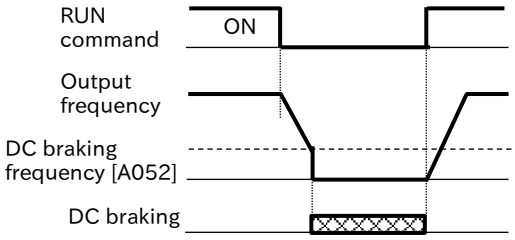


* In the case of edge operation, DC braking is applied for the duration of the [A055] setting when the output frequency falls below [A052].
In the case of level operation, DC braking is applied until the RUN command turns on when the output frequency falls below [A052].

■ (Example 5) When the "DC braking delay time [A053]" is set to a value other than 0.0 (s), and the same operation as that described in (Example 4) above is performed.

(Example 5-a) [A056] = "Edge operation (00)"

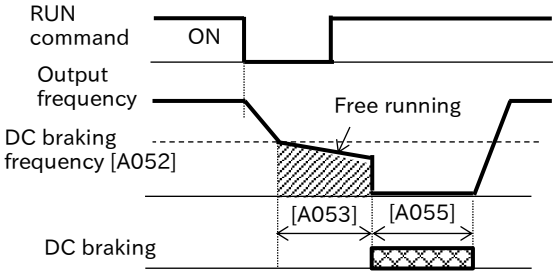


(Example 5-b) [A056] = "Level operation (00)"

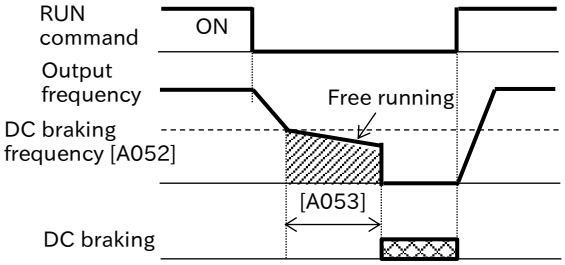


* If a value other than 0.0 (s) is set as the "DC braking delay time [A053]", DC braking is applied after free run stop (output shutdown) for the allotted time.

! 
- When the "DC braking selection [A051]" is set to "Enable (01)", DC braking can be triggered at start when the RUN command is turned on. For details, also refer to "9.7.2 Starting with DC Braking".

## A DC braking by frequency command ([A051] = "Enable (Output frequency < [A052]) (02)")

- To perform DC braking by frequency command, set the "DC braking selection [A051]" to "Enable (Output frequency < [A052]) (02)", and then set the "DC braking frequency [A052]".
- When DC braking by frequency command is enabled, the external DC braking using the [DB] terminal and DC braking when stopping described above do not function.
- DC braking is applied once both the frequency command and the output frequency fall below [A052] during operation.
- When the frequency command reaches [A052] + 2 Hz or more during operation, the DC braking is released and normal operation begins.
- DC braking does not trigger if a frequency command of [A052] + 2 Hz or higher is preset, and then the RUN command is turned on. (Example 6)
- If the frequency command is preset to "0 Hz" by analog input, etc. and the RUN command is turned on, DC braking is applied at startup because both the command frequency and output frequency are below the [A052] setting. (Example 7)
- DC braking operation varies depending on the edge operation/level operation settings in the "DC braking operation method selection [A056]". Configure edge operation or level operation settings to match the system in use, referring to the operation examples provided in the figure below. When edge operation is selected, set the "DC braking active time at stop [A055]".

■ (Example 6) Set a frequency command equal to or higher than [A052] before operation.
If the frequency command is less than/greater than [A052] during operation.

(Example 6-a) [A056] = "Edge operation (00)"

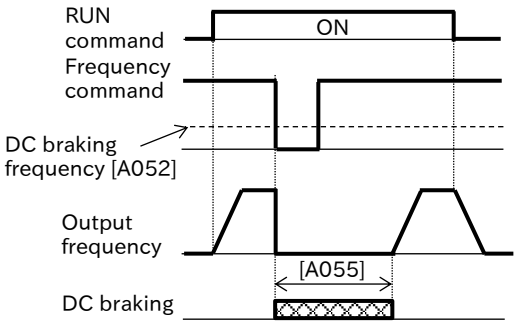


(Example 6-b) [A056] = "Level operation (01)"

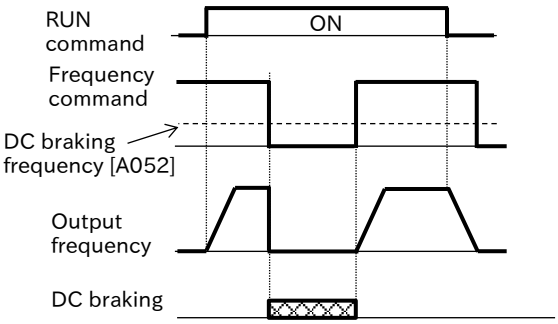


* DC braking is applied if the frequency command is less than [A052] when the RUN command is on.
In the case of edge operation, DC braking is applied for the duration of the [A055] setting when the frequency command and output frequency falls below [A052].
In the case of level operation, DC braking is applied until the RUN command turns on when the frequency command and output frequency falls below [A052].

■ (Example 7) Set a frequency command equal to or less than [A052] before operation due to the use of analog frequency commands. If the frequency command is less than/greater than [A052] after operation.

(Example 7-a) [A056] = "Edge operation (00)"

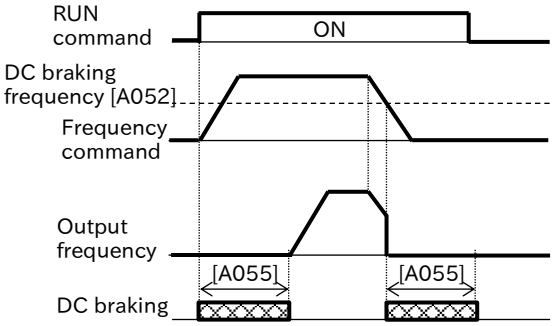


(Example 7-b) [A056] = "Level operation (01)"

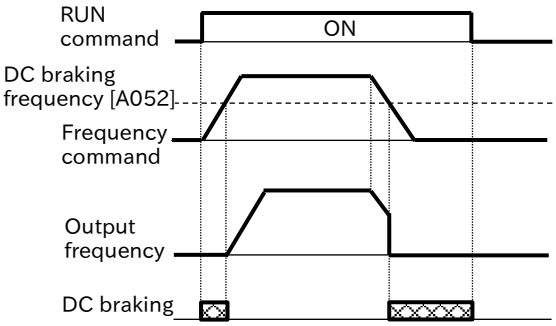


* DC braking is applied if the frequency command is less than [A052] when the RUN command is on.
In the case of edge operation, DC braking is applied for the duration of the [A055] setting when the frequency command and output frequency falls below [A052].
In the case of level operation, DC braking is applied until the RUN command turns on when the frequency command and output frequency falls below [A052].

## 9.7.9 Switching to Commercial Power Supply (Commercial Power Supply Change)

**Q**

- How to use the inverter to start a motor and then use a commercial power supply for continuous operation?
- How to switch between a commercial power supply and the inverter for driving the motor?

**A**

- A commercial power supply change function is available for systems with a large moment of inertia of the motor load. This feature allows the use of the inverter to drive acceleration and deceleration, and a commercial power supply to drive the motor at constant speeds.
- When "Commercial power supply change [CS] (14)" is turned on with the RUN command on, the inverter output is shut off and the motor starts free run. When [CS] terminal is turned off while on, the inverter matches the command frequency to the motor rotation speed (Active frequency matching restart at the frequency of the previous output interruption.) after the "Retry wait time after instantaneous power failure/undervoltage error [b003]" has elapsed.

**!**

- The [CS] terminal behaves in the same way as when the [FRS] terminal is turned on/off with "Restart mode after FRS release [b088]" as the "Active frequency matching restart (02)" and "Active frequency matching restart speed selection [b030]" as the "Output frequency at shut down (02)". For details, refer to "9.7.4 Starting with Active Frequency Matching".

| Code | Item | Description | Data |
|---|---|---|---|
| [C001] to [C007] | Input terminal function | Commercial power supply change [CS]: This function is used when switching to a commercial power supply. When [CS] is turned on, inverter output is shut-off. | 14 |

### ■ Example of connection diagram and timing chart for commercial power supply switching

- For FWY, RVY, and CSY, use a low voltage relay.
- Apply a mechanical interlock between MC3 and MC2. Otherwise, the inverter may be damaged.
- The electrical leakage breaker ELCB tripping due to a ground fault, or some other reason, will also render the commercial power circuit inoperable. If a backup is required, connect a separate commercial power circuit to MC2.

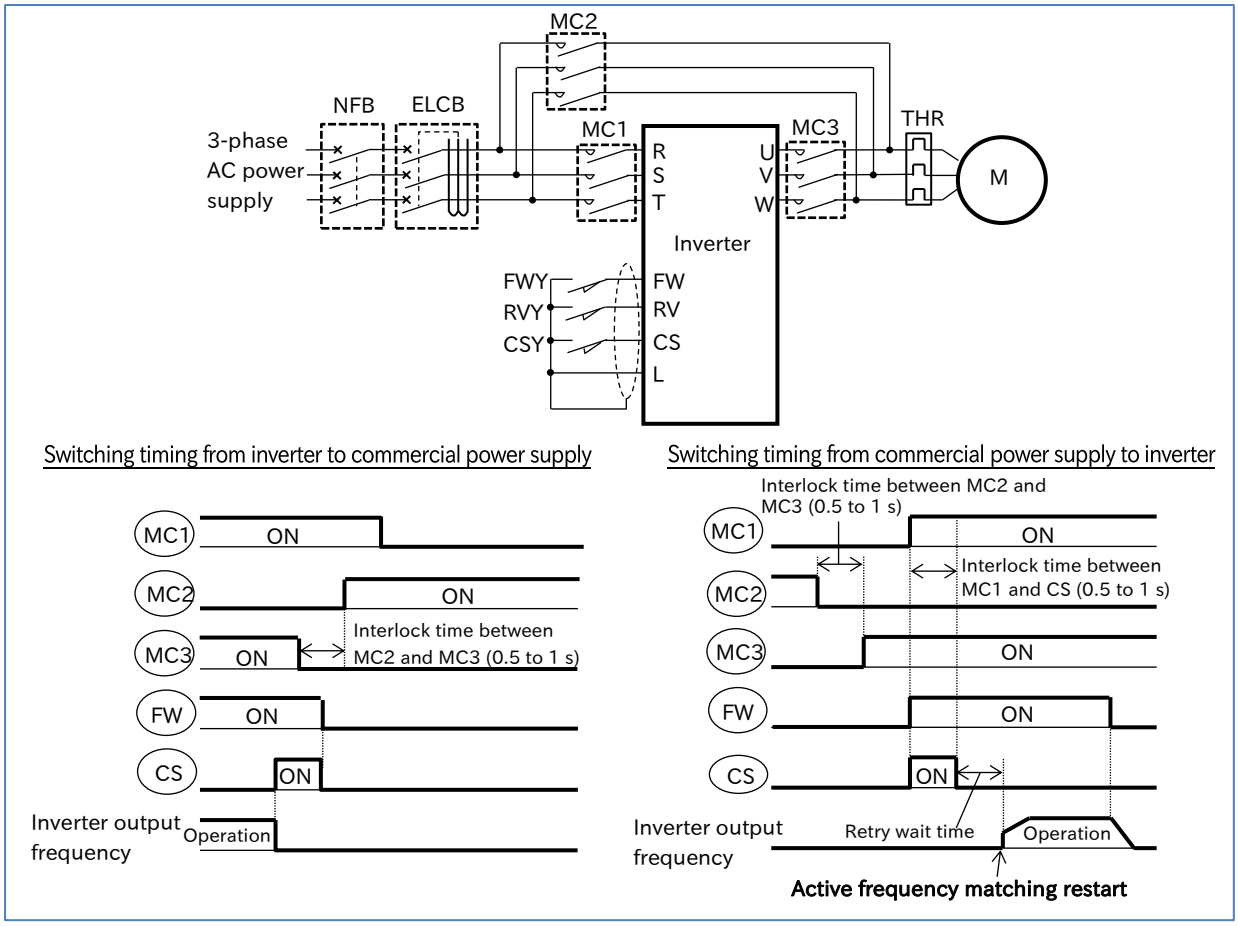

## 9.7.10 Starting and Stopping with External Brake Control

**Q**

- How to perform a sequence of operations using an external brake?

**A**

- The brake control function gives the inverter control over external brakes used for elevator systems, etc. When using this function, set "Brake control enable [b120]" to "Enable (01)", and assign "Brake release [BRK] (19)" to the output terminal.
- When operating this function while interlocking by inputting an engagement/release check signal from an external brake to the inverter, assign "Answer back from brake [BOK] (44)" to the input terminal and set "Brake confirmation signal wait time [b124]". If necessary, assign "Brake error [BER] (20)" to the output terminal.
- The brake control function can also be used in combination with simple position control. For details, refer to "9.14.4 Operating Simple Position Control with Brake Control".

**!**

- Sensorless vector control is the recommended control method when using the brake control function, as this generates high torque at startup.
- If an error occurs in the brake sequence, the inverter trips with "Brake error [E36]", and turns on "Brake error [BER] (20)". For details on tripping conditions, refer to the sequence of operations described below.

| Code | Item | Description | Data |
|---|---|---|---|
| [b120] | Brake control enable | Disable | 00 |
| | | Enabled (DC braking enabled at stop when position control is enabled) | 01 |
| | | Enabled (DC braking disabled at stop when position control is enabled) | 02 |
| [b121] | Brake release wait time | Sets the time required for the output current to reach the brake release current after the brake release frequency is reached. | 0.00 to 5.00 (s) |
| [b122] | Brake wait time for accel. | Sets the mechanical delay time from the brake confirmation signal (or the brake release signal) is received until the brake is released. | 0.00 to 5.00 (s) |
| [b123] | Brake wait time for stopping | Sets the mechanical delay time from the brake release signal is turned off until the brake is engaged. | 0.00 to 5.00 (s) |
| [b124] | Brake confirmation signal wait time | Sets the time or longer from the brake release signal is output until the release completion signal output from the brake is received by the inverter. | 0.00 to 5.00 (s) |
| [b125] | Brake release frequency*1 | Sets the frequency at which the brake release signal is turned on. | 0.00 to 590.00 (Hz) |
| [b126] | Brake release current*2 | Sets the output current at which the brake release is permitted. | (0.0 to 2.0) × rated current (A) |
| [b127] | Braking frequency*1 | Sets the frequency at which the brake is closed when stopping. | 0.00 to 590.00 (Hz) |
| [C001] to [C007] | Input terminal function | Answer back from brake [BOK]:<br>This checks the input signal using the answer returned for the [BRK] output signal to the external brake. | 44 |
| [C021] [C022] [C026] | Output terminal function | Brake release [BRK]:<br>It is the signal for an external brake engagement/release. | 19 |
| | | Brake error [BER]:<br>Turns on in the event of a sequence error for the brake control function. When this signal is turned on, the inverter trips with the "Brake error [E36]". | 20 |

*1. Set this to a value greater than the "Minimum frequency [b082]".
*2. Note that a lower value may not produce sufficient torque when the brake is released.

## Brake control function operating sequence

- The brake control function operating sequence is indicated in the figure below. The following section explains the brake control function in detail using the figure below. (In the figure below, "Answer back from brake [BOK] (44)" has been assigned to the input terminal.)

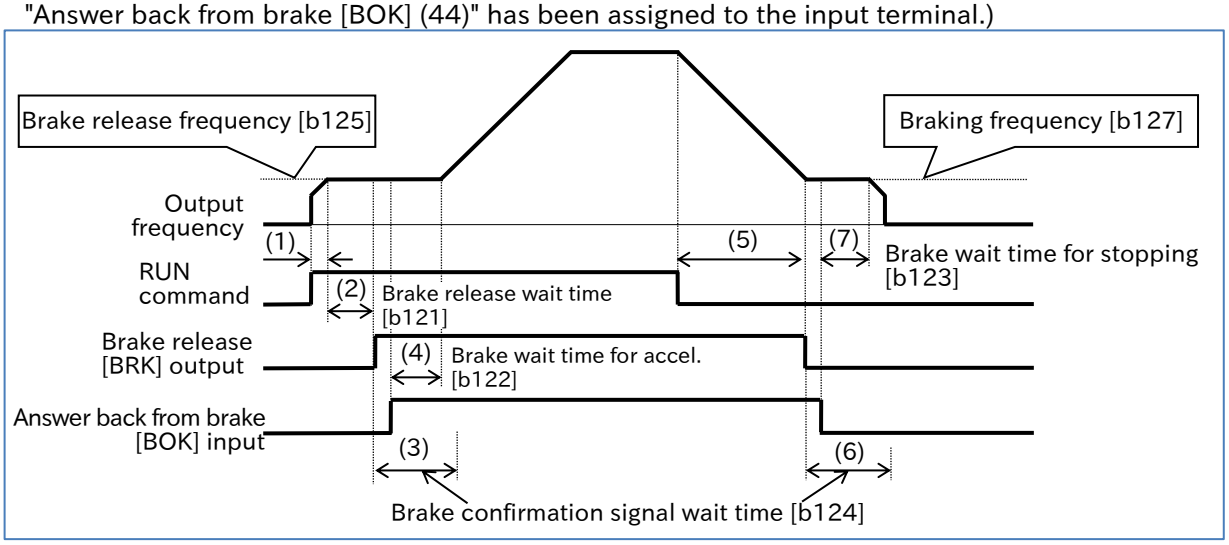


(1) When the RUN command is given, the inverter accelerates to the "Brake release frequency [b125]".

(2) After the output frequency reaches the "Brake release frequency [b125]" and also after the "Brake release wait time [b121]" has elapsed, "Brake release [BRK] (19)" is turned on. However, if the output current at this time is less than "Brake release current [b126]", [BRK] is not turned on, and instead, the "Brake error [E36]" trip occurs and "Brake error [BER] (20)" is turned on.

(3) Operation differs depending on whether or not " Answer back from brake [BOK] (44)" is assigned to the input terminal.

With [BOK] assignment:
After [BRK] is turned on, the inverter waits for [BOK] to be turned on during the " Brake confirmation signal wait time [b124]" without accelerating. If [BOK] is not turned on within the wait time, the "Brake error [E36]" trip occurs and "Brake error [BER]" is turned on.

Without [BOK] assignment:
After [BRK] is turned on, move to step (4).

(4) After the [BOK] input is turned on (or after the [BRK] output is turned on), when "Brake wait time for accel. [b122]" has elapsed, it accelerates to the set frequency again.

(5) If the RUN command is turned off, the inverter will decelerate to the "Braking frequency [b127]" and [BRK] will turn off.

(6) Operation differs depending on whether or not "Brake confirmation [BOK] (44)" is assigned to the input terminal.

With [BOK] assignment:
After [BRK] is turned off, the inverter waits for [BOK] to be turned off during "Brake confirmation signal wait time [b124]" without decelerating. If [BOK] is not turned off within the wait time, the "Brake error [E36]" trip occurs and "Brake error [BER]" is turned on.

Without [BOK] assignment:
After [BRK] is turned off, move to step (7).

(7) After the [BOK] input is turned off (or after the [BRK] output is turned off), when "Brake wait time for stopping [b123]" has elapsed, it decelerates to 0 Hz again.

## 9.7.11 Switching Between Two Motors

Q
- How to drive two different motors with different settings?
- How to store separate setting configurations for two different motors?
- How to change between setting configurations for batch production?

A
- Turn the "2nd-motor control [SET]" for the input terminal function on to change target parameters. This function makes it possible to switch between different parameter configurations to control two different types of motors.
- The "2nd-motor control is selected [SETM] (60)" output terminal function turns on when the [SET] function is turned on.
- Parameters in the 200s parameter number of function groups A, b, C, and H are the second control parameters.

  (Example) The second control parameter corresponding to the "Frequency input source selection, 1st-motor [A001]" is the "Frequency input source selection, 2nd-motor [A201]".

!
- These parameters do not change, even when changing [SET] during inverter operation. In this case, parameters change after the output is cut off.
- Please allow at least one second for changes to occur if you want to switch the [SET] terminal and immediately run operations.

| Code | Item | Description | Data |
|---|---|---|---|
| [C001] to [C007] | Input terminal function | 2nd-motor control [SET]:<br>Turn this function on to switch to the second control parameter. | 08 |
| [C021]<br>[C022]<br>[C026] | Output terminal function | 2nd-motor control is selected [SETM]:<br>After [SET] is turned on, switching to the second control parameter turns this signal on. | 60 |

### ■ List of parameters switched by turning [SET] on/off

| 1st/2nd code | | Item | 1st/2nd code | | Item |
|---|---|---|---|---|---|
| F002 | F202 | Acceleration time 1 setting or monitor | b012 | b212 | Electronic thermal level |
| F003 | F203 | Deceleration time 1 setting or monitor | b013 | b213 | Electronic thermal characteristics selection |
| A001 | A201 | Frequency input source selection | b021 | b221 | Overload restriction 1 mode selection |
| A002 | A202 | RUN command input source selection | b022 | b222 | Overload restriction 1 active level |
| A003 | A203 | Base frequency | b023 | b223 | Overload restriction 1 action time |
| A004 | A204 | Maximum frequency | C041 | C241 | Overload warning level |
| A020 | A220 | Multi-speed 0 | H002 | H202 | Async. Motor constant selection |
| A041 | A241 | Torque boost mode selection | H003 | H203 | Async. Motor capacity |
| A042 | A242 | Manual torque boost value | H004 | H204 | Async. Motor number of poles |
| A043 | A243 | Manual torque boost peak speed | H005 | H205 | Async. Motor speed response |
| A044 | A244 | Control mode selection | H006 | H206 | Async. Motor stabilization constant |
| A045 | A245 | Output voltage gain | H020 | H220 | Async. Motor constant R1 |
| A046 | A246 | Automatic torque boost voltage compensation gain | H021 | H221 | Async. Motor constant R2 |
| A047 | A247 | Automatic torque boost slip compensation gain | H022 | H222 | Async. Motor constant L |
| A061 | A261 | Upper frequency limit | H023 | H223 | Async. Motor constant I0 |
| A062 | A262 | Lower frequency limit | H024 | H224 | Async. Motor constant J |
| A081 | A281 | AVR function selection | H030 | H230 | Async. Motor constant R1 (auto-tuning data) |
| A082 | A282 | Motor rated voltage | H031 | H231 | Async. Motor constant R2 (auto-tuning data) |
| A092 | A292 | Acceleration time 2 | H032 | H232 | Async. Motor constant L (auto-tuning data) |
| A093 | A293 | Deceleration time 2 | H033 | H233 | Async. Motor constant I0 (auto-tuning data) |
| A094 | A294 | Accel/Decel change trigger selection | H034 | H234 | Async. Motor constant J (auto-tuning data) |
| A095 | A295 | Accel1 to Accel2 frequency transition point | | | |
| A096 | A296 | Decel1 to Decel2 frequency transition point | | | |

# 9.8 Driving by PID Process Control

## 9.8.1 Using PID Control

Q

- How to perform process control for the flow rate, air volume, pressure, and other measurements?
- How to switch between PID control and normal control?
- How to soft start the pump to avoid the water hammer phenomenon?
- How to stop the motor to save energy when the flow rate, air volume, pressure, and other measurements exceed a certain output?

A

- Use this function to perform process control for the flow rate, air volume, pressure, and other measurements. To use this function, set "PID enable [A071]" to "Enable (01)" or "Enable (with inverted output) (02)".
- When the input terminal function "Disable PID [PID] (23)" is on, the PID function is disabled and the inverter operates according to the frequency command selected for the target value.
- PID output can be limited based on the PID target value using "PID output range [A078]".
- PID control allows the use of feed-forward input that attempts to pre-stabilize any external disturbances.
- A sleep mode is available when operation is stopped to reduce downtime and improve energy efficiency.

!

- If the acceleration/deceleration time setting is longer than the PID operation, following the output frequency may delay and PID control may not be successful. In this case, reduce the acceleration/deceleration time.
- The frequency upper and lower limit function ([A061]/[A261]/[A062]/[A262]) apply to frequency command by the PID output. They do not apply to PID target value.
- When using an analog input for the PID target value/feedback value, do not set the "Analog input filter time constant [A016]" to "31 (500 ms filter ±0.1 Hz with hysteresis)". This may cause operations to become unstable.

| Code | Item | Description | Data |
|---|---|---|---|
| [d004] | PID feedback value monitor | Displays the PID feedback data multiplied by the [A075] scale value. | 0.00 to 9999.00 (%) |
| [d153] | PID deviation monitor | Displays the PID deviation amount multiplied by the [A075] scale value. | -9999.00 to 9999.00 (%) |
| [d155] | PID output monitor | Displays the PID output value after the limiter has been applied. | -100.00 to 100.00 (%) |
| [A071] | PID enable | Disable | 00 |
| | | Enable | 01 |
| | | Enable (with inverted output) | 02 |
| [A072] | PID proportional gain | Sets the PID proportional gain. | 0.00 to 25.00 |
| [A073] | PID integral time constant | Sets the PID integral gain. | 0.0 to 3600.0 (s) |
| [A074] | PID derivative gain | Sets the PID derivative gain. | 0.00 to 100.00 (s) |
| [A075] | PID scale | Data for unit conversion for PID feedback monitors, etc. | 0.01 to 99.99 |
| [A076] | PID feedback input source selection | [Ai2] terminal input (current input) | 00 |
| | | [Ai1] terminal input (voltage input) | 01 |
| | | Modbus communication (RS-485) | 02 |
| | | Pulse train frequency | 03 |
| | | Calculation function result | 10 |
| [A077] | PID deviation inversion | Disable | 00 |
| | | Enable | 01 |
| [A078] | PID output range | The PID output changeable range is limited by the PID target value ± this set value. Set in units of %, with the maximum frequency being 100%. | 0.0 to 100.0 (%) |

| Code | Item | Description | Data |
|---|---|---|---|
| [A079] | PID feed-forward input source selection | 00 (Disable) | 00 |
| | | 01 ([Ai1] terminal input (voltage input)) | 01 |
| | | 02 ([Ai2] terminal input (current input)) | 02 |
| [A156] | PID sleep start level | The sleep operation start level is set by output frequency. | 0.00 to 590.00 (Hz) |
| [A157] | PID sleep active time | The sleep operation starts when [A156] or a lower value persists for the duration of this setting. | 0.0 to 25.5 (s) |
| [C044] | PID over deviation level | Outputs "Over deviation for PID control [OD] (04)" when PID deviation equals or is greater than this setting. Set in units of %, with the maximum frequency being 100%. | 0.0 to 100.0 (%) |
| [C052] | Turn-off level for the PID feedback compare signal | Sets the point at which the PID feedback comparison signal is turned OFF. | 0.0 to 100.0 (%) |
| [C053] | Turn-on level for the PID feedback compare signal | Sets the point at which the PID feedback comparison signal is turned ON. | 0.0 to 100.0 (%) |
| [C001] to [C007] | Input terminal function | Disable PID [PID]:<br>Turn this signal ON to disable PID calculation and enter normal frequency operation mode. | 23 |
| | | PID integration reset [PIDC]:<br>Turn this signal ON to reset the integral value of PID control to 0. | 24 |
| [C021] [C022] [C026] | Output terminal function | Over deviation for PID control [OD]:<br>This signal turns ON when the PID deviation equals or exceeds the [C044] setting. | 04 |
| | | PID feedback comparison [FBV]:<br>This signal turns ON when the PID feedback falls outside the setting range. | 31 |

## A Basic configuration and operation of PID control

### ■ PID control block diagram

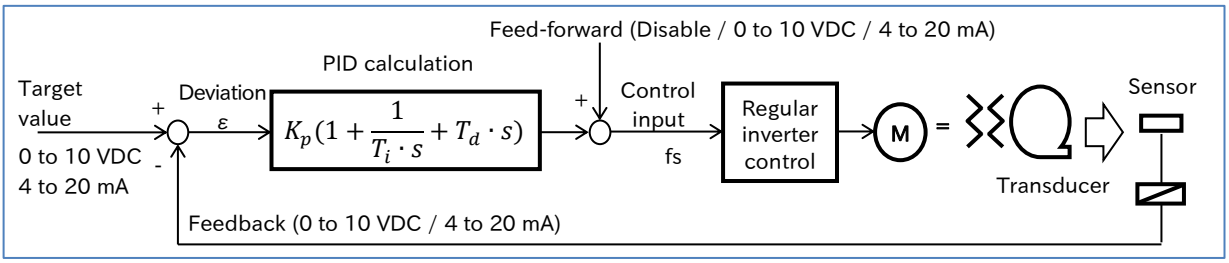


### ■ PID operation

(1) P-operation: Operation in which the control input is proportional to the deviation (PID target value - FB value).

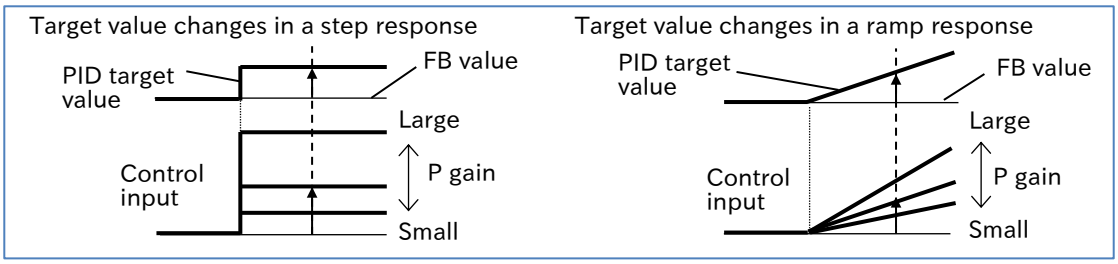


(2) I-operation: Operation in which the deviation is integrated per unit time and added to the control input. In a P-operation, changes in output are reduced as the PID target value and FB value get closer, increasing the time required to reach the target value, which is compensated for by the I-operation.

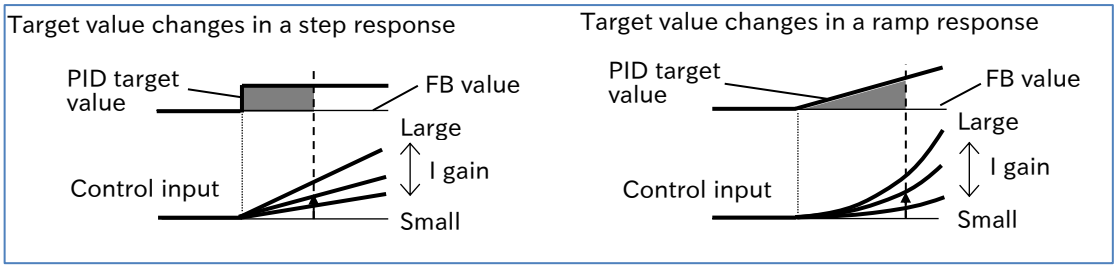


(3) D-operation: Operation in which the control input is proportional to the rate of change of deviation. This effectively compensates for external disturbances.

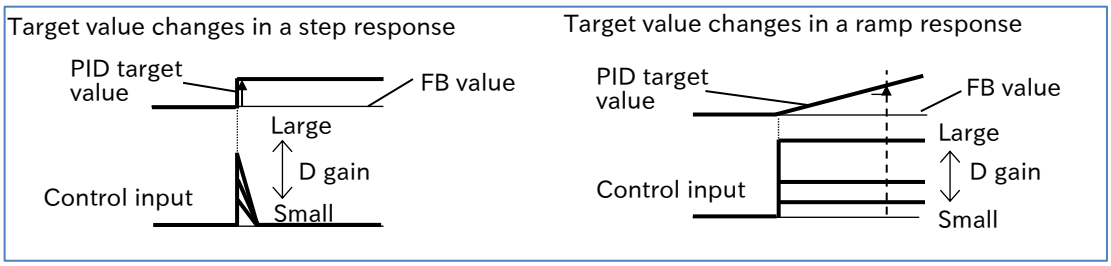

## Basic PID control setting and adjustment

### 1 Enabling the PID function

- PID control is enabled by setting "PID enable [A071]".
  When "PID enable [A071]" is set to "Enable (01)", the inverter limits the frequency command at 0 Hz if the PID calculation result is negative.
  When "PID enable [A071]" is set to "Enable (with inverted output) (02)", the frequency command can be output in the direction of reverse rotation if the PID calculation result is negative. (When [A071] is set to "Enable (with inverted output) (02)", the "PID output range [A078]" is disabled.)

### 2 Unit conversion and scale setting when PID is enabled

- When the PID function is enabled, the following parameter units change to percentage (%) units with the maximum frequency set as 100%. In addition, set "PID scale [A075]" to apply scale conversion as shown below. Set [A075] if necessary.

  Value after conversion = Value before conversion × "PID scale [A075]"

| | | | | | | | |
|---|---|---|---|---|---|---|---|
| d004 | F001 | A011 | A012 | A020 | A220 | A021 | A022 |
| A023 | A024 | A025 | A026 | A027 | A028 | A029 | A030 |
| A031 | A032 | A033 | A034 | A035 | A101 | A102 | A145 |

(Note) Please note the read and write units for the above parameters change during Modbus communication when the PID function is enabled. When writing, use units of 0.01 Hz, and when reading, use the following percentage (%) units with the maximum frequency set as 100%.
[d004]=0.1% (read only), [F001]=0.01%, [A011] to [A145]=0.1%

To the next page

## 3 Setting the PID target value input source and feedback input source

- Set the PID feedback value input source with "PID feedback input source selection [A076]", and the PID target value input source with "Frequency input source selection [A001]*1".
- If the PID feedback input source is "[Ai2] terminal input (00)" or "[Ai1] terminal input (01)", and the PID target value input source is "Control terminal (01)", the "AT selection [A005]" will be disabled, and the analog input not set by [A076] becomes the target value input source.
  (Example) If [A076] is "[Ai2] terminal input (00)" and [A001] is "Control circuit terminal block (01)", the PID target value input source is the [Ai1] terminal input.

- If the PID feedback value input source is "Modbus communication (02)", write the feedback value in the holding register address 0006h, with 10000 being 100%.

| Register number | Code | Item | R/W | Data range | Resolution (%) |
|---|---|---|---|---|---|
| 0006h | - | PID feedback | R/W | 0 to 10000 | 0.01 (%) |

(Note) This register is only writable when [A076] is set to "Modbus communication (02)".

- If the PID target value input source or PID feedback value input source is "Pulse input", the value retrieved is converted to a percentage of the maximum frequency (100%), with the maximum frequency being the pulse frequency set in "Pulse frequency scale [P055]". For details on pulse frequency commands, refer to "9.2.8 Setting Pulse Input as the Frequency Command Input Source".
- If the PID target value input source or PID feedback value input source is the "Calculation function result," refer to "9.2.11 Setting a Calculation Operation on Two Frequency Commands as the Frequency Command Input Source" for details.

## 4 Setting and adjusting proportional gain, integral gain, and derivative gain

- Set the "PID proportional gain [A072]", "PID integral gain [A073]," and "PID derivative gain [A074]" according to the actual control target.
- If the response is not stable in PID operation, refer to the procedure below to make adjustments.

| Event ▷ | Example of countermeasures |
|---|---|
| • Even when the PID target value fluctuates, output response is slow, and the feedback value changes slowly. | Increase the "PID proportional gain [A072]". |
| • Feedback values change quickly and are not stable.<br>• Overshooting and hunting occur. | Decrease the "PID proportional gain [A072]". |
| • Feedback values gradually fluctuate.<br>• There is a delay before operations stabilize. | Increase the "PID integral time constant [A073]". |
| • The PID target value and feedback value do not match easily. | Decrease the "PID integral time constant [A073]". |
| • There is a slow response even when proportional gain is increased.<br>• Small-scale hunting occurs. | Increase the "PID derivative gain [A074]". |
| • There is a greater susceptibility to external disturbances, and operations take longer to stabilize. | Decrease the "PID derivative gain [A074]". |

*1. "2nd-motor control [SET]" target parameter. The second control parameter is also subject to setting.

## A Other functions related to the PID function

### ■ PID feed-forward setting

- PID control allows the use of feed-forward control that attempts to pre-stabilize any external disturbances.
- Set the "PID feed-forward input source selection [A079]" to "[Ai1] terminal input (01)" or "[Ai2] terminal input (02)" to enable feed-forward input.
- Feed-forward input settings can be duplicated with target value input and feedback input. When creating duplicate settings, the same analog input value is entered for both.

### ■ Invert the sign of PID deviation and output

- Certain sensor characteristics may cause inconsistencies between the polarity of deviation between the target value and the feedback value and the inverter command. In such a case, set "PID deviation inversion [A077]" to "Enable (01)" to invert the polarity of deviation.

  Example: Controlling a refrigerator compressor

  Assuming temperature sensor specifications of -20 to 100˚C: 0 to 10 (V), with a target value of 0˚C, if the current temperature is 10˚C, normal PID control will decrease the speed of the inverter as the (FB value) > (PID target value). If [A077] is set to "Enable (01)", the inverter will increase its speed.

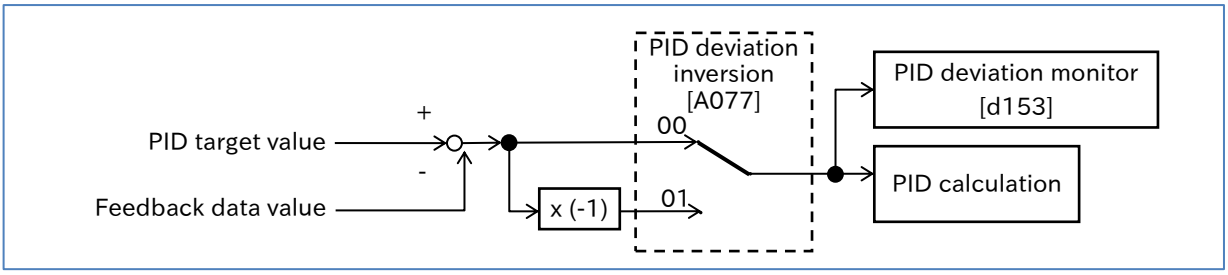


### ■ PID output range limit

- This function limits PID output to the PID target value ± "PID output range [A078]", and prevents sudden fluctuations in the output frequency caused by PID calculations. Set [A078] with the maximum frequency being 100%.
- This function is disabled when [A078] is 0.0.

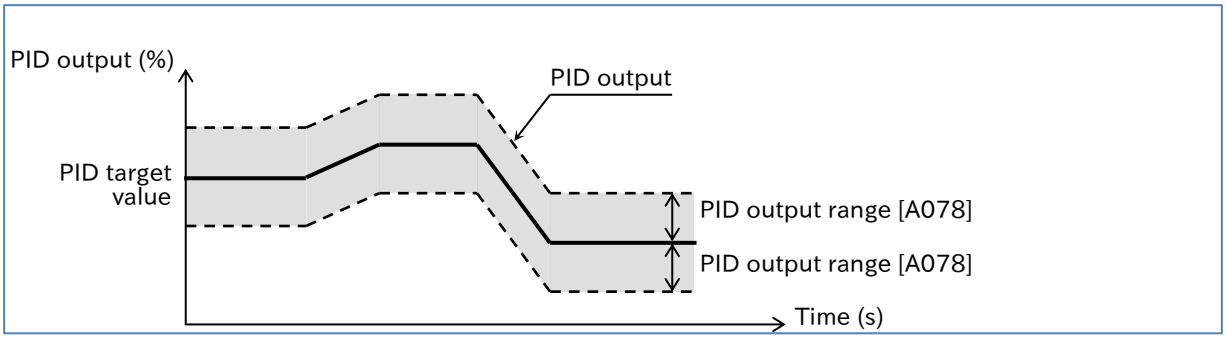


### ■ PID disable function

- Turn on the "Disable PID [PID] (23)" input to disable PID operation. While the [PID] input is on, the inverter outputs according to the frequency command.
- When using the PID disable function, assign " Disable PID [PID] (23)" to one of the input terminals.

## ■ PID integral value reset function

- Turn on the "PID integration reset [PIDC](24)" input to clear the integral value of the PID operation.
- When using the [PIDC] input, assign "PID integration reset [PIDC](24)" to one of the input terminals.
- If the [PIDC] input is turned on while the inverter is running with PID enabled, the integrated value added to the PID output command is cleared, causing a sudden fluctuation in the PID output command value, and issues such as an overcurrent trip to occur. When the [PIDC] input is turned on, the PID operation should be turned off.

## ■ PID sleep function

- The inverter stops if the PID output remains at or below the "PID sleep start level [A156]" for the duration of the "PID sleep active time [A157]". The stop method (deceleration stop/free run stop) applied is based on "STOP mode selection [b091]" settings.
- This function works even when the "Disable PID [PID] (23)" input is on during PID operation.

## ■ Over deviation for PID control signal

- The "Over deviation for PID control [OD] (04)" output turns on when the PID deviation exceeds the "PID over deviation level [C044]".
- To use this function, assign "Over deviation for PID control [OD] (04)" to one of the output terminals.

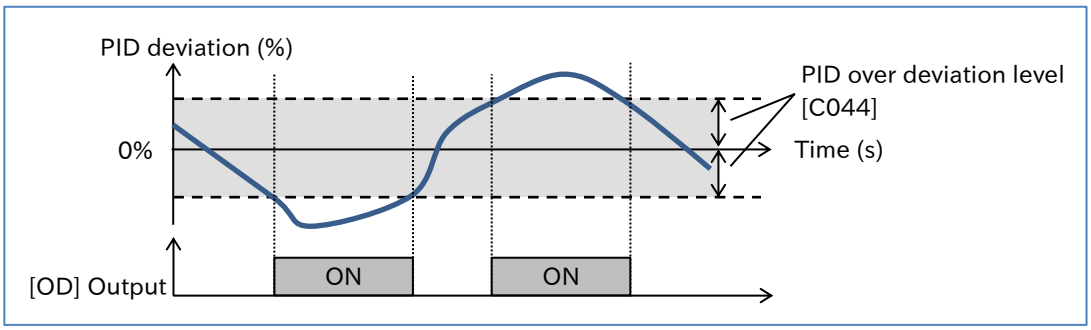


## ■ PID feedback comparison signal

- If the PID feedback is outside the setting range, the "PID feedback comparison [FBV] (31)" output turns ON. The ON/OFF level for the PID feedback compare signal ([C052]/[C053]) should be set as a percentage (%), with the maximum frequency being 100%.
- To use this function, assign "PID feedback comparison [FBV] (31)" to one of the output terminals.
- Set the PID feedback compare signal level so that the OFF level ([C052]) ≥ ON level ([C053]). If the OFF level ([C052]) < ON level ([C053]), the OFF level is converted internally to a value equal to the ON level. In this case, the PID feedback compare signal is ON at values lower than the ON level ([C053]), and OFF at values above.
- This function works by setting the ON level/OFF level to a value other than 0.0.
- This function only works during operation.

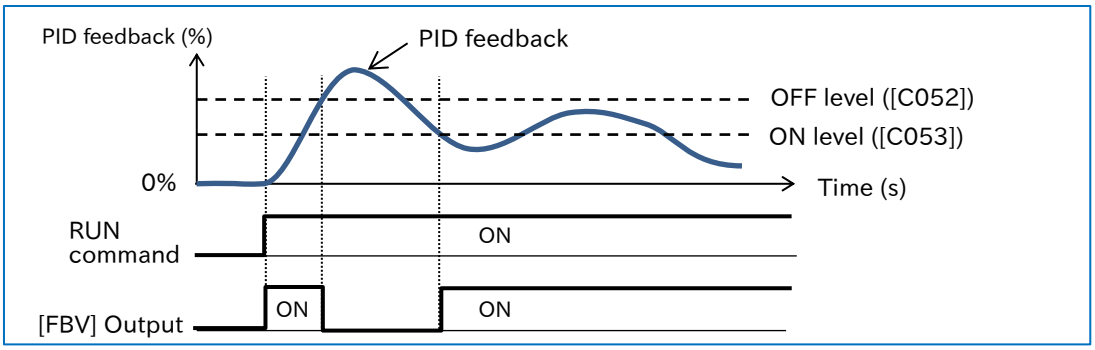

# 9.9 Using Trip Prevention Functions

## 9.9.1 Restriction to Avoid Overload

Q

- How to automatically reduce the output frequency to avoid overload when the load becomes too large?
- How to prevent stalling?
- How to accelerate the motor while reducing the current flowing to the motor?
- How to avoid overcurrent errors caused by sudden load fluctuations?

A

- The overload restriction function monitors the motor current during acceleration or operation at a constant speed and automatically reduces the output frequency according to the overload restriction action time when the overload restriction active level is reached. Depending on the overload restriction mode selection setting, the operation is as follows.
- Two independent overload restriction action levels can be set. "Overload restriction selection [OLR](39)" can be assigned to an input terminal, and the overload restriction 1/2 can be switched by turning that terminal on or off.

| Overload restriction selection | Operation description |
|---|---|
| Enabled during accel. and constant speed ([b021]=01) | Monitors output current during acceleration or operation at a constant speed. The current is suppressed by decelerating the motor against any excessive load during acceleration or for sudden load fluctuations at a constant speed. |
| Constant speed only ([b021]=02) | Monitors output current only at a constant speed. The current is suppressed by decelerating the motor only for sudden load fluctuations at a constant speed. |
| Enabled during accel. and constant speed (Accel. during regeneration) ([b021]=03) | Monitors output current during acceleration or operation at a constant speed. In addition to the operation of "Enabled during accel. and constant speed (01)", when a regenerative load is applied to the motor at a constant speed, this function accelerates the motor to prevent overload. |

!

- When this function is activated during acceleration, the acceleration time to reach the frequency command will be longer than the setting.
- When the overload restriction action time is set too short, the automatic deceleration of this function may result in an overvoltage trip due to regenerative energy from the motor.
- If the motor speed does not reach the target frequency due to the automatic deceleration caused by this function during acceleration, the following adjustments may improve the situation.
  - Increase the acceleration time
  - Adjust the torque boost
  - Increase the overload restriction active level

| Code | Item | Description | Data |
|---|---|---|---|
| [b021]*1 | Overload restriction 1 mode selection | Disable | 00 |
| | | Enable during acceleration and constant speed | 01 |
| | | Constant speed only | 02 |
| | | Enabled during acceleration and constant speed (Accel. during regeneration) | 03 |
| [b022]*1 | Overload restriction 1 active level | Sets the current value when the overload restriction is activated. | (0.20 to 2.00) × rated current (A) (ND mode)<br>(0.20 to 1.50) × rated current (A) (LD mode) |
| [b023]*1 | Overload restriction 1 action time | Sets the deceleration time when the overload restriction is activated. The value is set to the deceleration time from the maximum frequency to 0 Hz. | 0.1 to 3000.0 (s) |
| [b024] | Overload restriction 2 mode selection | Sets the operation of Overload restriction 2, which operates when the [OLR] terminal is ON.<br>The settings are similar to [b021], [b022], and [b023]. | 00 to 03 |
| [b025] | Overload restriction 2 active level | | (0.20 to 2.00) × rated current (A) (ND mode)<br>(0.20 to 1.50) × rated current (A) (LD mode) |
| [b026] | Overload restriction 2 action time | | 0.1 to 3000.0 (s) |
| [C001] to [C007] | Input terminal function | Overload restriction selection [OLR]: Switches overload restriction 1/2 by turning on or off of this terminal. | 39 |

## ■ Example of overload restriction function operation

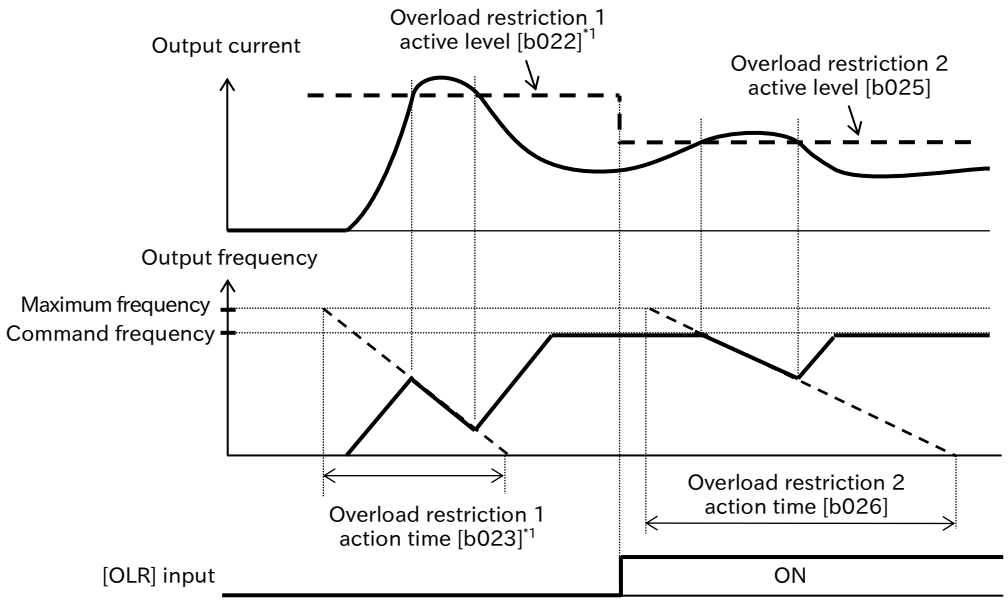


*1. "2nd-motor control [SET]" target parameter. The second control parameter is also subject to setting.

## 9.9.2 Restriction to Avoid Overcurrent

Q

- How to avoid overcurrent errors caused by impact loads?
- How to avoid tripping when the current increases momentarily?
- How to accelerate the motor while suppressing the current flowing to the motor?
- How to avoid tripping when sudden load fluctuations occur?

A

- The overcurrent suppression function can suppress overcurrent caused by sudden current increase during quick acceleration, etc.
- When overcurrent suppression function is enabled, this function is performed when the output current exceeds 180% of the rated current to prevent overcurrent trip.
- When "Enable (with voltage reduction) (02)" is set for "Overcurrent suppression enable [b027]", the output voltage is reduced during overcurrent suppression function in operation to enhance the overcurrent suppression effect.

!

- Disable this function when using the inverter for lifts, etc. Suppressing the current may result in insufficient torque, causing the load cage or suspended object to slide off.
- Even if this function is enabled, an overcurrent trip may occur when the current increases too suddenly due to an impact load or other causes.

| Code | Item | Description | Data |
|---|---|---|---|
| [b027] | Overcurrent suppression enable | Disable | 00 |
| | | Enable (without voltage reduction) | 01 |
| | | Enable (with voltage reduction) | 02 |

## 9.9.3 Suppressing Overvoltage by Controlling Output Frequency

**Q**

- How to avoid overvoltage errors that occur when the motor is decelerated?
- How to avoid overvoltage errors caused by regenerative voltage during deceleration by automatically extending the deceleration time?

**A**

- The overvoltage suppression function can prevent the occurrence of overvoltage error during deceleration.
- This function is activated when the DC bus voltage between the [P] and [N] terminals of the inverter main circuit (P-N voltage) exceeds the overvoltage suppression active level setting.

**!**

- This function makes the actual deceleration time longer than the set value.
- Depending on the moment of inertia of the load, it may take a long time to stop.
- Overvoltage trips may occur depending on the deceleration rate or load conditions.
- The overvoltage suppression active level should be set to be equal to or greater than the input voltage × √2 × 1.1. If a value lower than the P-N voltage value during operation is set, the motor may not be able to stop.

| Code | Item | Description | Data |
|---|---|---|---|
| [b130] | Overvoltage suppression enable | Disable | 00 |
| | | Constant DC bus voltage control (deceleration stop) | 01 |
| | | Enable acceleration (during deceleration only) | 02 |
| [b131] | Overvoltage suppression active level | Sets the operation level of the overvoltage suppression function. | 200V class: 330 to 400 (VDC)<br>400V class: 660 to 800 (VDC) |
| [b132] | Overvoltage suppression active time | Acceleration time when the overvoltage suppression function is in operation. | 0.10 to 30.00 (s) |
| [b133] | Constant DC bus voltage control P gain | Proportional gain for PI control of constant DC bus voltage control. | 0.00 to 5.00 |
| [b134] | Constant DC bus voltage control I gain | Integral gain for PI control of constant DC bus voltage control. | 0.0 to 150.0 (s) |

### For Constant DC bus voltage control ("Overvoltage suppression enable [b130]" = 01)

- Constant DC bus voltage control automatically decelerates the motor while performing PI control so that the P-N voltage remains constant during deceleration.
- Setting a larger proportional gain ([b133]) and a shorter integral gain ([b134]) will speed up the response but make it more likely to trip.

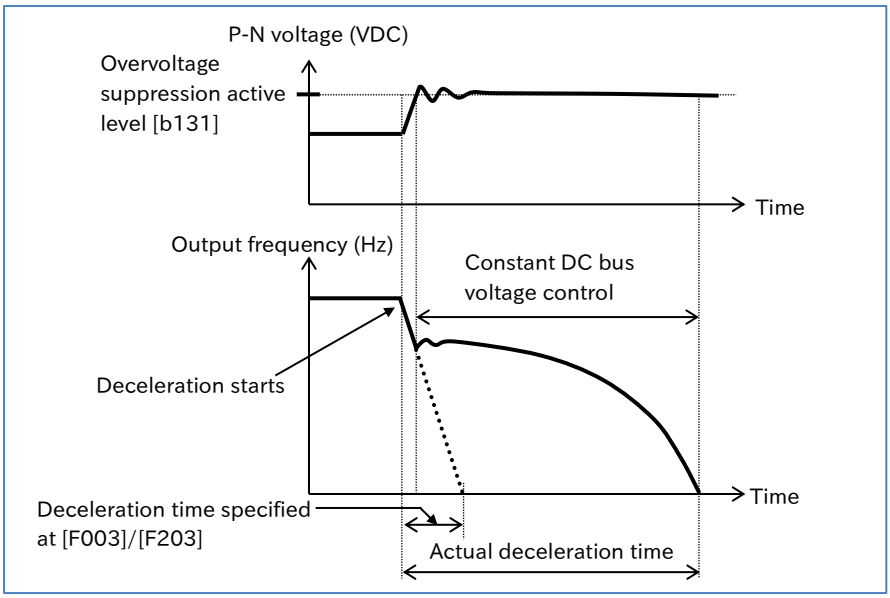

## For Enable acceleration ("Overvoltage suppression enable [b130]" = 02)

- Enable acceleration performs acceleration operation according to "Overvoltage suppression active time [b132]" when the P-N voltage exceeds the overvoltage suppression active level during deceleration. Normal deceleration is then resumed when the P-N falls to or below the overvoltage suppression active level.

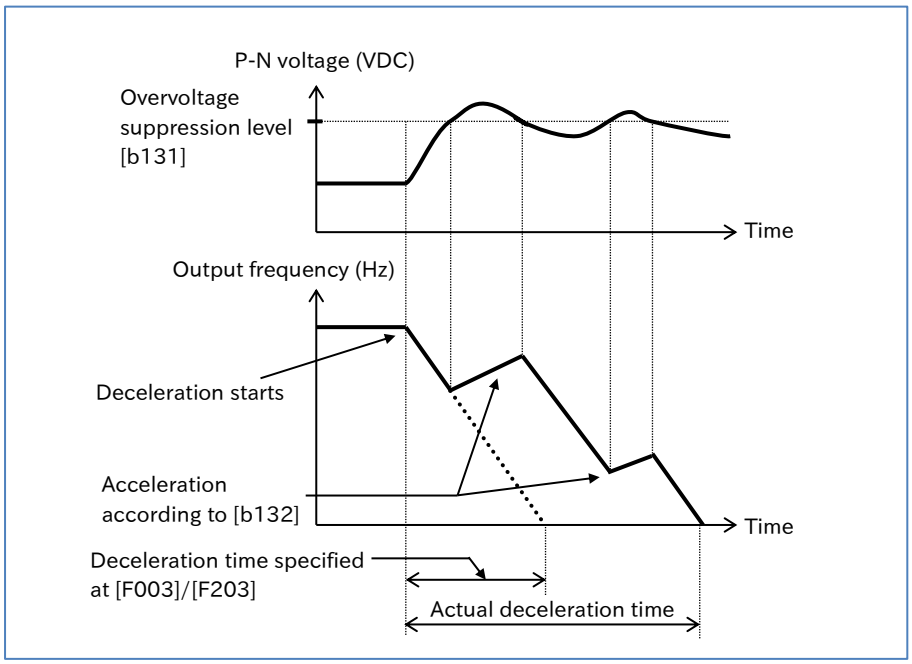


- If the "Overvoltage suppression active time [b132]" is shortened, an increase in the output frequency due to acceleration is greater than that of the deceleration, and as a result, the motor may not be able to stop. In such a case, increase the "Overvoltage suppression active level [b131]".

## 9.9.4 Suppressing Overvoltage by Controlling Output Voltage

Q

- How to avoid overvoltage errors that occur when the motor is decelerated?
- How to increase the output voltage according to the regenerative power during deceleration and decelerate the motor while avoiding the overvoltage error?

A

- When the control method is V/f control, output voltage can be controlled by the AVR function using "AVR function selection [A081][*1*2]".
- Overexcitation of the motor during deceleration reduces regenerative energy to the inverter, making it less likely to cause overvoltage error.

!

- Even when "Always enable (00)" is set, voltage exceeding the input voltage cannot be output.
- When the AVR function is turned off, the motor may generate more heat due to an increase in output current caused by an increase in output voltage or due to overexcitation of the motor.
- Overvoltage trips may occur depending on the deceleration rate or load conditions.

| Code | Item | Description | Data |
|---|---|---|---|
| [A081][*1] | AVR function selection | Always enable | 00 |
| | | Always disable | 01 |
| | | Disable during deceleration: The motor become overexcitation state only during deceleration. | 02 |
| [A082][*1] | Motor rated voltage | Sets the rated voltage of the motor. | 200 V class: 200/215/220/230/240<br>400 V class: 380/400/415/440/460/480 |
| [A083] | AVR function output filter time constant | Filter time constant for the output voltage at overexcitation state. | 0.000 to 10.000 (s) |
| [A084] | AVR function voltage gain during deceleration | Gain for the output voltage at overexcitation state. | 50 to 200 (%) |

*1. "2nd-motor control [SET]" target parameter. The second control parameter is also subject to setting.

## ■ For Always enable ("AVR function selection [A081][*1]" = 00)

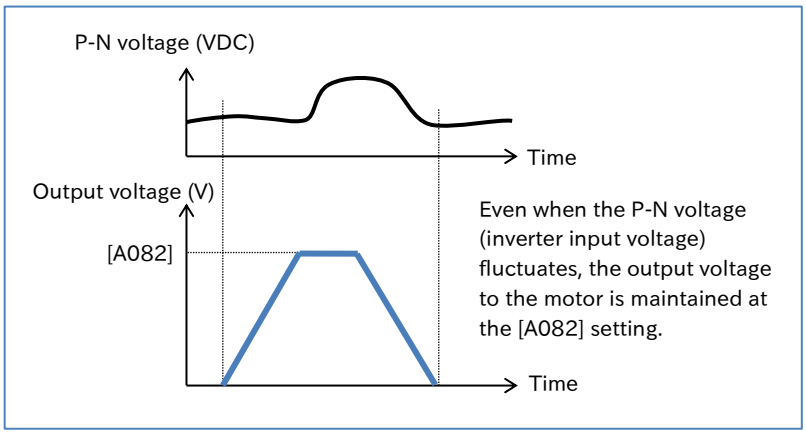


## ■ For Always disabled ("AVR function selection [A081][*1]" = 01)

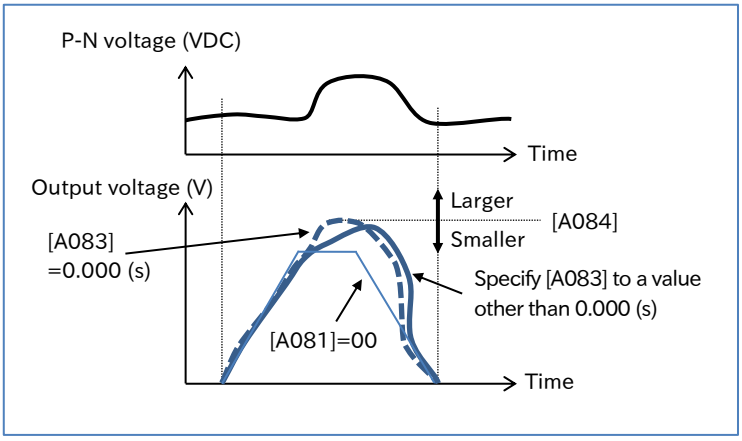


## ■ For Disabled at deceleration ("AVR function selection [A081][*1]" = 02)

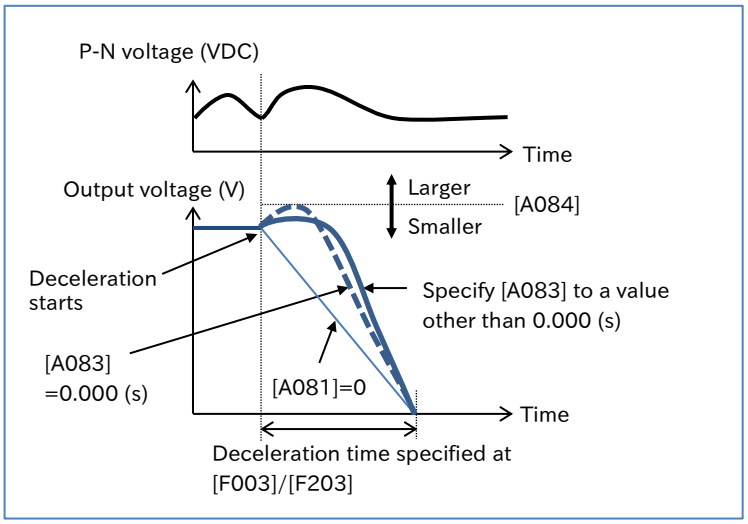

## 9.9.5 Suppressing Overvoltage with Braking Resistor

**Q**

- How to avoid overvoltage errors when decelerating the motor?
- How to avoid overvoltage errors due to a regenerative load?
- How to drive the motor in a quick deceleration application?
- How to avoid overvoltage errors during the lowering operation?

**A**

- During deceleration, the motor acts as a generator and energy is regenerated to the inverter. As a result, the P-N voltage rises and the inverter trips when the overvoltage level is exceeded. To prevent this, the BRD function uses external resistors to consume the regenerative energy from the motor as heat.
- To use this function, connect external braking resistors and set each parameter in the table below based on "5.3.5 Wiring of Braking Resistor and Regenerative Braking Unit".

**!**

- Instead of using the built-in braking resistor operation circuit (BRD), an optional regenerative braking unit can be used to obtain greater regenerative torque. In this case, set "Dynamic brake activation selection [b095]" to "Disable (00)".
- The "Dynamic brake activation level [b096]" is the level specified in the main circuit DC smoothing capacitor within the inverter. Be sure to set a value that exceeds √2 times the input voltage. Otherwise, the braking resistors may burnout.
- The minimum resistance value that can be connected depends on the model. For details, refer to "Chapter 17 Specifications/Dimensions/Derating".

| Code | Item | Description | Data |
|---|---|---|---|
| [b090] | Dynamic brake use ratio | When this setting is 0.0, the BRD function is not activated.<br>The upper limit value of [b090] varies depending on the setting of "Dynamic brake resistor value [b097]". Be sure to set the [b097] value first. Then, set the BRD use ratio to a value equal to or less than the allowable % ED of the braking resistor to be connected, based on the drawing below.<br> 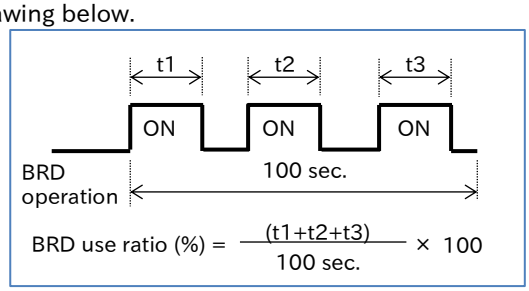 <br><br>When the specified use rate is exceeded, the inverter trips with "Braking resistor overload error [E06]". | 0.0/<br>0.1 (%) to a value depending on the [b097] setting |
| [b095] | Dynamic brake activation selection | Disabled | 00 |
| | | Enabled only while running | 01 |
| | | Enabled always | 02 |
| [b096] | Dynamic brake activation level | This is the level the BRD function is activated. This value is used to adjust the operation level of the BRD function that corresponds to the input voltage of the inverter. Be sure to set a value that exceeds √2 times the input voltage. | 200 V class:<br>330 to 400 (VDC)<br>400 V class:<br>660 to 800 (VDC) |
| [b097] | Dynamic brake resistor value | Set the resistance value of the actually connected BRD resistor. The upper limit value of the BRD use rate for the inverter will be automatically calculated. This means that only the allowable % ED of the BRD resistor needs to be considered when setting [b090]. | Minimum resistance to 600.0 (Ω) |

## 9.9.6 Restarting after Instantaneous Power Failure/Undervoltage

Q

- How to keep the inverter running even if the main power is momentarily lost due to a power failure?
- After an undervoltage error occurs, how to restart the inverter at an output frequency that corresponds to the motor speed?

A

- When the power supply falls below the undervoltage level and then power is restored, the inverter can be set to trip or restart without tripping using "Restart mode selection after instantaneous power failure/undervoltage error [b001]".
- When restart ([b001] = 01 to 04) is selected, the restart operation is repeated the number of times specified in "Number of retries after instantaneous power failure/undervoltage [b005]", and then the inverter trips after the specified reties are finished. (Only when "Unlimited (01)" is selected for [b005], unlimited restarts are enabled.)
- When frequency matching restart is performed ([b001] = 02, 03), the restart mode is active frequency matching restart at the frequency of the previous output interruption. For details, refer to "9.7.3 Starting with Frequency Matching".
- To perform an active frequency matching restart ([b001] = 04), refer to "9.7.4 Starting with Active Frequency Matching" for details.
- When power is turned off to save energy, etc. while the inverter is stopped, undervoltage trips during stop can be avoided by setting "Enable instantaneous power failure/undervoltage error while in stop status [b004]" to "Disable (00)" or "Disable at Stop/Decel. stop (02)".
- "DC bus voltage monitor [d102]" can be used to monitor the P-N voltage in the inverter.
- If the power failure lasts for long time and the control microcomputer is completely shut down, after power is restored, the same procedure will be followed as when the power is turned on.

!

- When the P-N voltage falls to or below the undervoltage level (approx. 172.5 VDC for 200 V class and 345 VDC for 400 V class), the inverter shuts off the output and the motor runs free. When the time until power returns is defined as "Undervoltage time", an "Undervoltage error [E09]" will occur in the following cases.
  - When [b001] = "Trip (00)" and the undervoltage time ≦ "Instantaneous power failure/undervoltage allowed time [b002]".
  - When [b001] ≠ "Trip (00)" and the undervoltage time > "Instantaneous power failure/undervoltage allowed time [b002]".
  - If the undervoltage time is equal to or longer than about 40 seconds, an "Undervoltage error [E09]" occurs without waiting for power to return.
- When "Decelerate and stop with frequency matching and then trip (03)" is specified and an overvoltage or overcurrent error occurs during deceleration after restart function is performed, an "Undervoltage error [E09]" appears and the motor runs free. In this case, increase the deceleration time.
- The "Undervoltage [UV]" signal is output when the voltage is insufficient regardless of whether a trip occurs or not. This signal continues to output while the inverter's control circuit power remains (including external 24 VDC power supply).

| Code | Item | Description | Data |
|---|---|---|---|
| [b001] | Restart mode selection after instantaneous power failure/undervoltage error | Trip occurs. | 00 |
| | | The inverter restarts from 0 Hz. | 01 |
| | | Performs the frequency matching restart (= Active frequency matching restart at the frequency of the previous output interruption). | 02 |
| | | After frequency matching restart (= Active frequency matching restart at the frequency of the previous output interruption), deceleration stop and trip occur. | 03 |
| | | Performs the active frequency matching restart. | 04 |
| [b002] | Instantaneous power failure/undervoltage allowed time | If the power returns within this set time, the inverter restarts. If the instantaneous power failure/undervoltage lasts for longer than this set time, the inverter will trip. | 0.3 to 25.0 (s) |
| [b003] | Retry wait time after instantaneous power failure/undervoltage error | Sets the wait time from when the power returns until the restart. | 0.3 to 100.0 (s) |
| [b004] | Enable instantaneous power failure/ undervoltage trip while in stop status | Disabled: No trips occur during stop. | 00 |
| | | Enable: Trips occur even during stop. | 01 |
| | | No trips occur during deceleration stop when RUN command is OFF or during stop. | 02 |
| [b005] | Number of retries after instantaneous power failure/undervoltage | 16 times:<br>The inverter restarts up to the 16th instantaneous power failure/ undervoltage error, but trips for the 17th time and thereafter.<br>(The counter is cleared by a reset input or power interruption.) | 00 |
| | | Unlimited: No trips occur. | 01 |
| [C021]<br>[C022]<br>[C026] | Output terminal function | Undervoltage [UV]:<br>This signal turns on when the P-N voltage is equal to or below the undervoltage level. | 09 |

## A Operations of "Restart mode selection after instantaneous power failure/undervoltage error [b001]"

### Trip ([b001] = 00)

- When an instantaneous power failure or undervoltage error is detected, the inverter output is shut off, and the motor runs free. If the power is restored within [b002], an "Undervoltage error [E09]" occurs and an "Alarm [AL]" will be output.

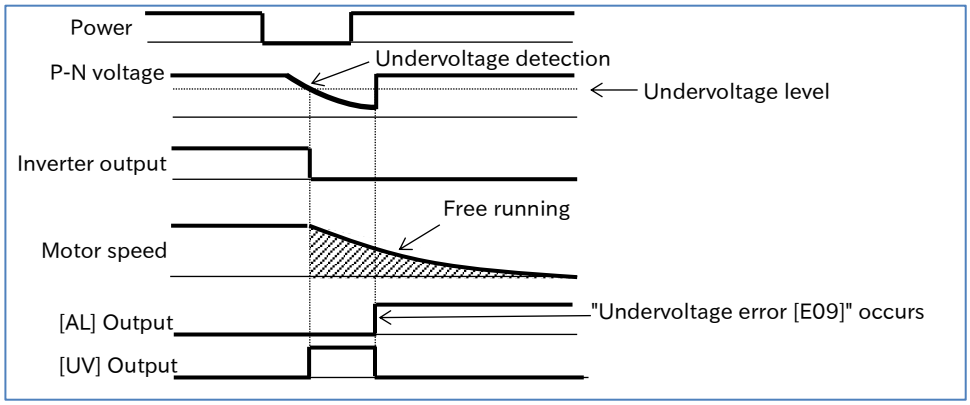


### 0 Hz start ([b001] = 01)

- Detection of an instantaneous power failure or undervoltage error shuts off the inverter output, and the motor runs free. After the power returns, the inverter restarts from 0 Hz after the retry wait time set in [b003]. At this time, no "Alarm [AL]" is output.

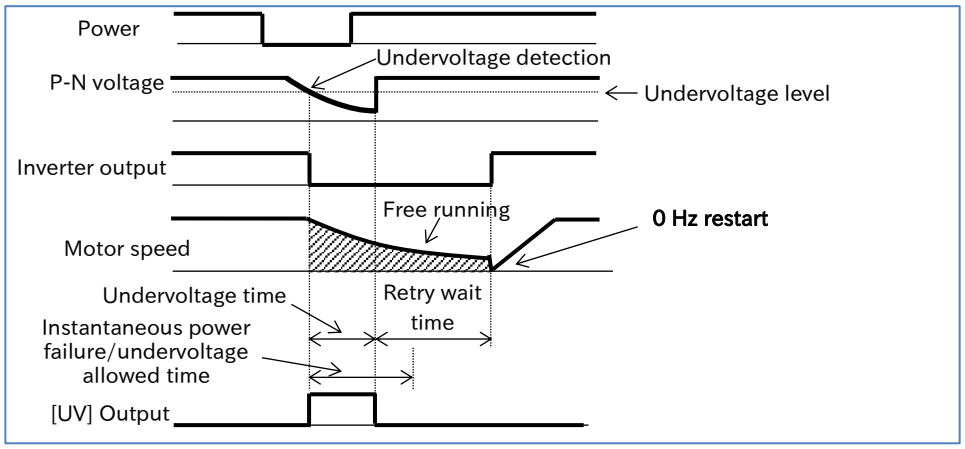

## Restart with frequency matching ([b001] = 02)

- Detection of an instantaneous power failure or undervoltage error shuts off the inverter output, and the motor runs free. After the power returns, the inverter performs an active frequency matching restart at the frequency of the previous output interruption after the retry wait time set in [b003]. At this time, no "Alarm [AL]" is output.
- For details, refer to "9.7.3 Starting with Frequency Matching".

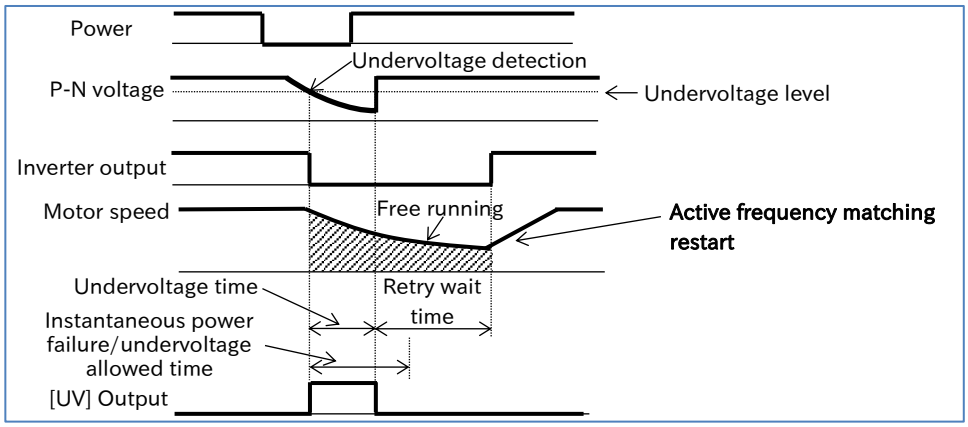


## Decelerate and stop with frequency matching and then trip ([b001] = 03)

- Detection of an instantaneous power failure or undervoltage error shuts off the inverter output, and the motor runs free. After the power returns, the inverter performs an active frequency matching restart at the frequency of the previous output interruption after the retry wait time set in [b003], then decelerates the motor to stop and outputs an "Alarm [AL]".
- For details, refer to "9.7.3 Starting with Frequency Matching".

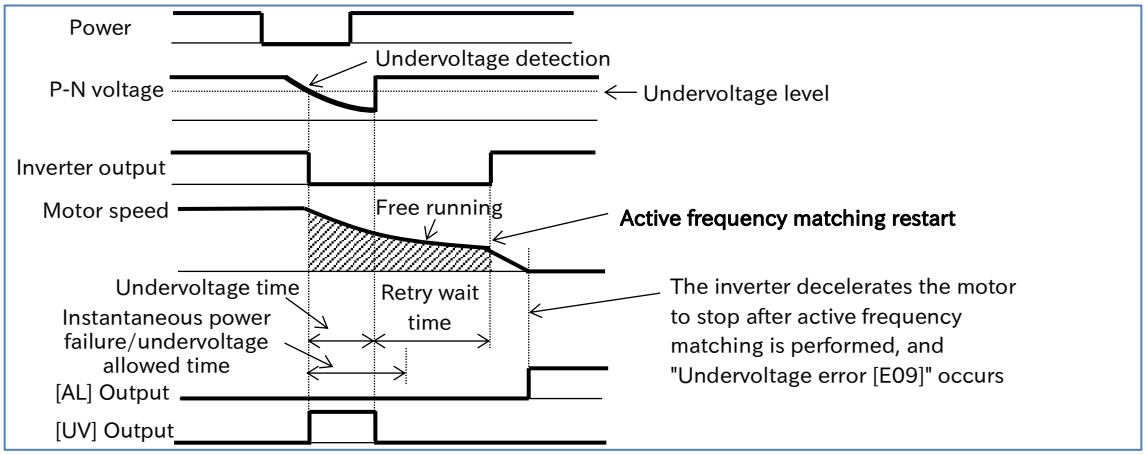


## Active Frequency matching restart ([b001] = 04)

- Detection of an instantaneous power failure or undervoltage error shuts off the inverter output, and the motor runs free. After the power returns, the inverter performs an active frequency matching restart after the retry wait time set in [b003]. At this time, no "Alarm [AL]" is output.
- For details on active frequency matching restart, refer to "9.7.4 Starting with Active Frequency Matching".

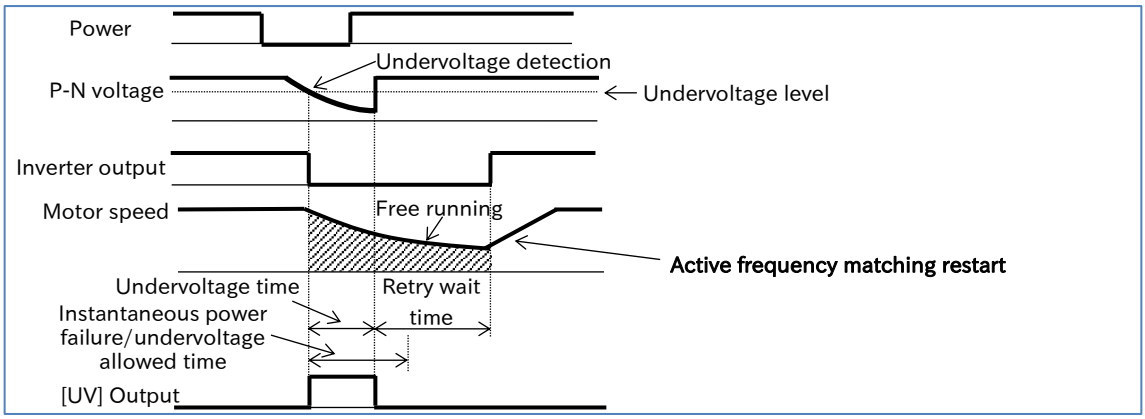

## A Operations of "Enable instantaneous power failure/undervoltage error while in stop status [b004]"

- [b004] is used to select whether or not a trip signal is output when an instantaneous power failure or undervoltage error occurs in stop status.
- The trip signal is output while the inverter's control power remains.

### For [b004] = "Disable (00)"

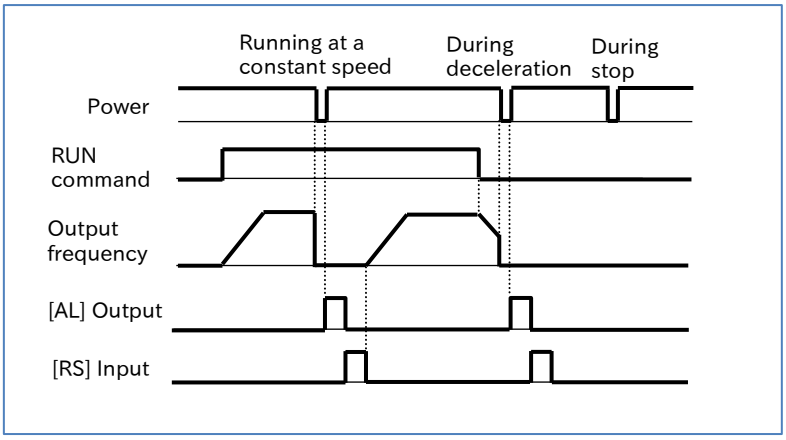


### For [b004] = "Enable (01)"

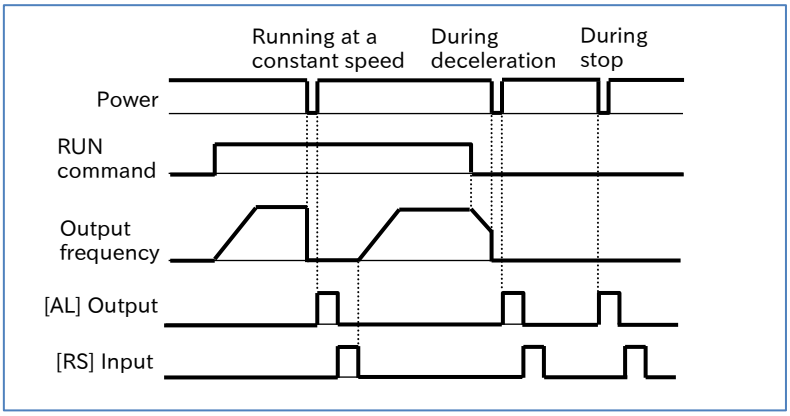


### For [b004] = "Disable at Stop/Decel. Stop (02)"

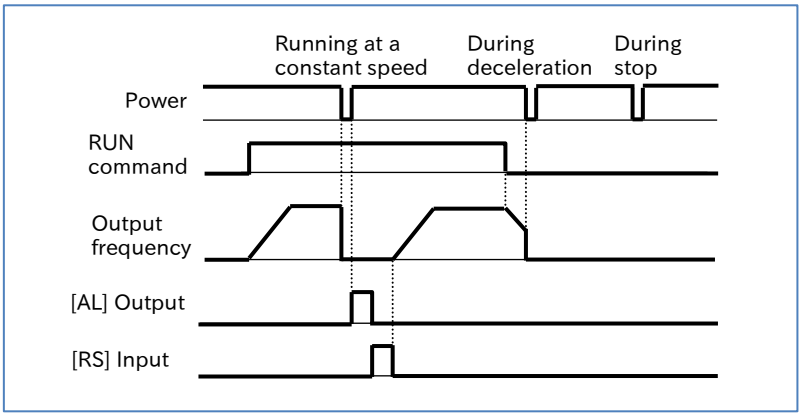

## 9.9.7 Restarting after Overvoltage/Overcurrent

Q

- Overvoltage or overcurrent rarely occurs, so how to restart the system when there is no problem in the system?
- How to continue to run the system when overvoltage or overcurrent occurs?

A

- When overvoltage or overcurrent occurs, the inverter can be set to trip or restart without tripping using "Restart mode selection after overvoltage/overcurrent error [b008]".
- When restart is selected, the restart operation is repeated the number of times specified in "Number of retries after overvoltage/overcurrent [b010]", and then the inverter trips after the specified reties are finished.
- When frequency correspondence restart is performed ([b008] = 02, 03), the restart mode is active frequency matching restart at the frequency of the previous output interruption. For details, refer to "9.7.3 Starting with Frequency Matching".
- To perform an active frequency matching restart ([b008] = 04), refer to "9.7.4 Starting with Active Frequency Matching" for details.

!

- When overcurrent continues to occur, this may be caused by acceleration time specified too short, excessive loads, or the motor being locked.
- When overvoltage continues to occur, this may be caused by deceleration time specified too short, excessive loads, or the motor rotated by an external force.
- Even when the restart operation is selected, if the trip factor has not been solved after the "Retry wait time after overvoltage/overcurrent error [b011]", the inverter will detect the trip again. In this case, increase the retry wait time.

| Code | Item | Description | Data |
|---|---|---|---|
| [b008] | Restart mode selection after overvoltage/ overcurrent error | Trip occurs. | 00 |
| | | The inverter restarts from 0 Hz. | 01 |
| | | Performs the frequency matching restart (= Active frequency matching restart at the frequency of the previous output interruption). | 02 |
| | | After frequency matching restart (= Active frequency matching restart at the frequency of the previous output interruption), deceleration stop and trip occur. | 03 |
| | | Performs the active frequency matching restart. | 04 |
| [b010] | Number of retries after overvoltage/overcurrent | Sets the number of retries for when there is an overvoltage/overcurrent. | 1 to 3 (times) |
| [b011] | Retry wait time after overvoltage/overcurrent error | Sets the wait time from when overvoltage or overcurrent is detected until the restart. | 0.3 to 100.0 (s) |

## A Operations of "Restart mode selection after overvoltage/overcurrent error [b008]"

### Trip ([b008] = 00)

- Detection of overcurrent or overvoltage shuts off the inverter output, and the motor runs free. "Overcurrent error [E01] to [E04]" or "Overvoltage error [E07]" occurs and "Alarm [AL]" is output.

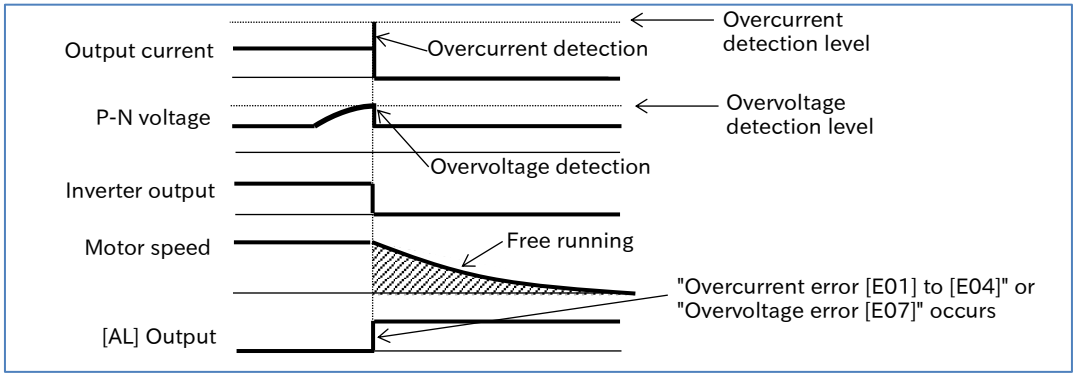


### 0 Hz restart ([b008] = 01)

- Detection of overcurrent or overvoltage shuts off the inverter output, and the motor runs free. The inverter then restarts from 0 Hz after the retry wait time set in [b011]. At this time, no "Alarm [AL]" is output.

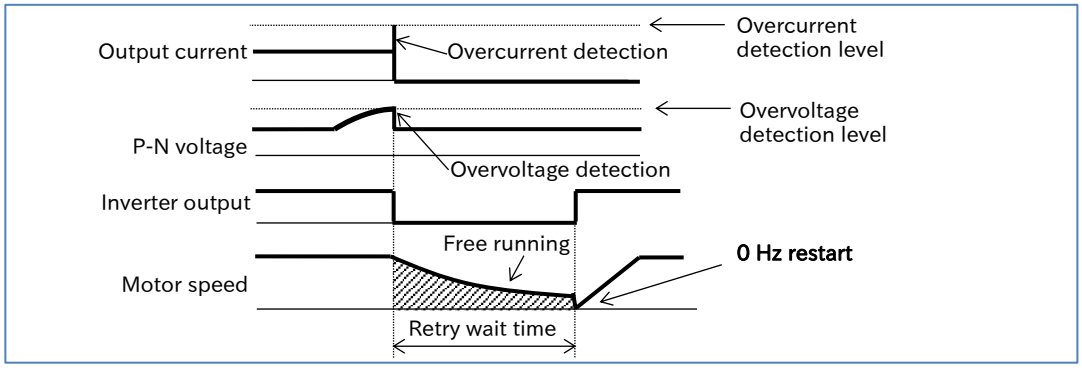


### Decelerate and stop with frequency matching and then trip ([b008] = 02)

- Detection of overcurrent or overvoltage shuts off the inverter output, and the motor runs free. The inverter then performs an Active frequency matching restart at the frequency of the previous output interruption after the retry wait time set in [b011]. At this time, no "Alarm [AL]" is output.
- For details, refer to "9.7.3 Starting with Frequency Matching".

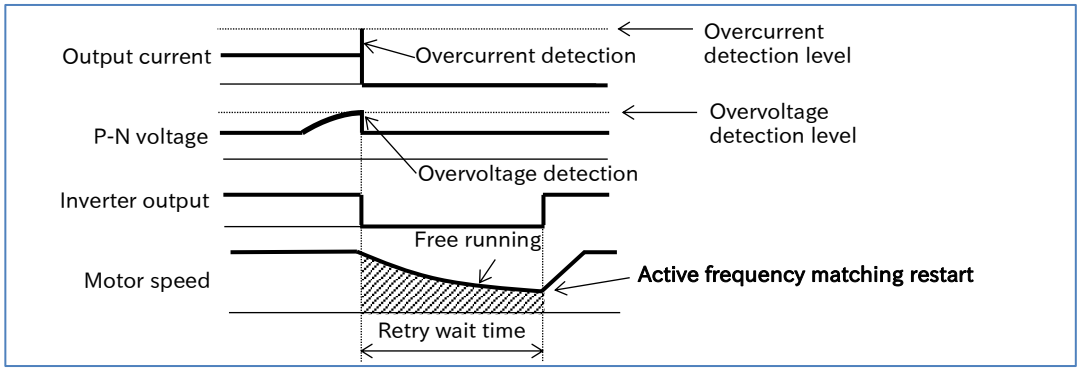

## Decelerate and stop with frequency matching and then trip ([b008] = 03)

- Detection of overcurrent or overvoltage shuts off the inverter output, and the motor runs free. The inverter performs an active frequency matching restart at the frequency of the previous output interruption after the retry wait time set in [b011], then decelerates the motor to stop and outputs an "Alarm [AL]".
- For details, refer to "9.7.3 Starting with Frequency Matching".

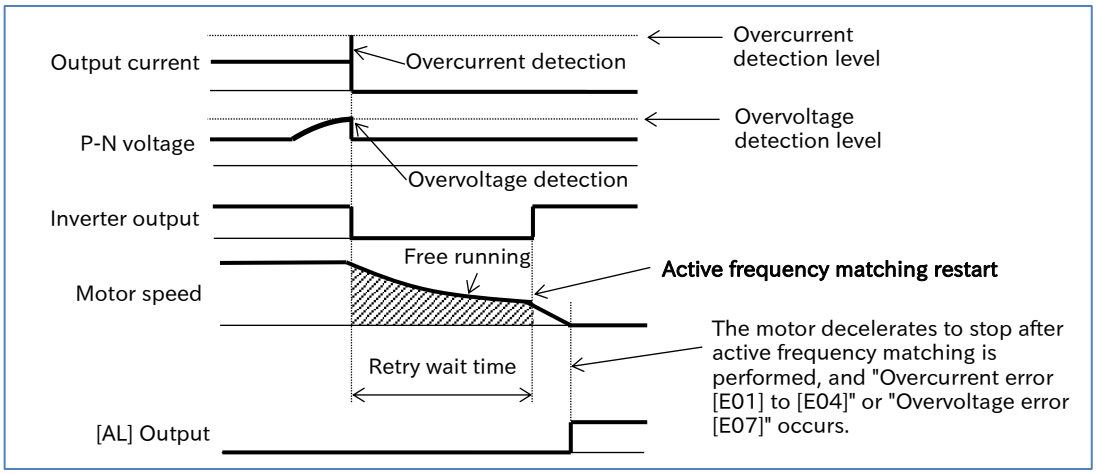


## Active frequency matching restart ([b008] = 04)

- Detection of overcurrent or overvoltage shuts off the inverter output, and the motor runs free. The inverter then performs an active frequency matching restart after the retry wait time set in [b011]. At this time, no "Alarm [AL]" is output.
- For details on active frequency matching restart, refer to "9.7.4 Starting with Active Frequency Matching".

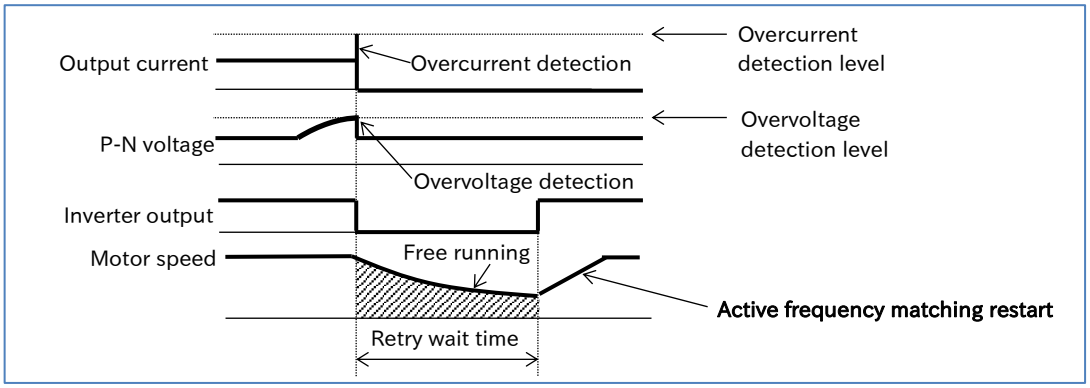

## 9.9.8 Continuing to Drive Even after Instantaneous Power Failure/Undervoltage Error

**Q**

- How to keep the motor running without shutting off the output after instantaneous power failure or undervoltage error occurs?
- How to resume operation when the power is restored without shutting off the output after instantaneous power failure or undervoltage error occurs?

**A**

- The non-stop operation during instantaneous power failure function is a function that decelerates the motor to stop without shutting off the inverter output and without exceeding the overvoltage level, even when a power interruption occurs during operation.
- Three deceleration stop operation modes can be selected by setting "Instantaneous power failure non-stop function, mode selection [b050]".

**!**

- The "Instantaneous power failure non-stop function, start voltage level [b051]" and the "Instantaneous power failure non-stop function, target voltage level [b052]" should be equal to or greater than the undervoltage level (approx. 172.5 VDC for 200 V class and 345 VDC for 400 V class). This function does not operate when there is an undervoltage. Also, set the [b051] value to be smaller than that of [b052].
- When " Instantaneous power failure non-stop function, mode selection [b050]" is set to either "Deceleration-stop (01)", "Voltage controlled deceleration-stop (without recovery) (02)", or "Voltage controlled deceleration-stop (with recovery) (03)" to perform deceleration stop, this function is not released until the deceleration stop is completed after this function is activated. When restarting the inverter, confirm that deceleration stop by this function is completed and the power has returned, turn off the RUN command once, and then turn it on again.

| Code | Item | Description | Data |
|---|---|---|---|
| [b050] | Instantaneous power failure non-stop function, mode selection | Disable | 00 |
| | | Deceleration-stop:<br>This decelerates the motor to stop. | 01 |
| | | Voltage controlled deceleration-stop (without recovery):<br>This decelerates the motor to stop while performing constant DC voltage control. The deceleration stop continues even after the power returns. | 02 |
| | | Voltage controlled deceleration-stop (with recovery):<br>This decelerates the motor to stop while performing constant DC voltage control. When the power returns, operation resumes. | 03 |
| [b051] | Instantaneous power failure non-stop function, start voltage level | Deceleration starts when the P-N voltage falls to or below this setting. | 200 V class:<br>0.0 to 400.0 (VDC)<br>400 V class:<br>0.0 to 800.0 (VDC) |
| [b052] | Instantaneous power failure non-stop function, target voltage level | After deceleration starts, when the P-N voltage exceeds this setting due to regeneration, this temporarily stops deceleration. | 200 V class:<br>0.0 to 400.0 (VDC)<br>400 V class:<br>0.0 to 800.0 (VDC) |
| [b053] | Instantaneous power failure non-stop function, deceleration time | Sets the deceleration time during the operation of this function. | 0.01 to 3600.00 (s) |
| [b054] | Instantaneous power failure non-stop function, start frequency decrement | Sets the difference between the output frequency and the frequency at which deceleration starts. | 0.00 to 10.00 (Hz) |
| [b133] | Constant DC bus voltage control P gain | Proportional gain for PI control of constant DC voltage control. | 0.00 to 5.00 |
| [b134] | Constant DC bus voltage control I gain | Integral gain for PI control of constant DC voltage control. | 0.0 to 150.0 (s) |

## Instantaneous power failure non-stop function, mode selection, "Deceleration-stop ([b050] = 01)"

- When the power is interrupted during operation, once the P-N voltage falls to or below the "Instantaneous power failure non-stop function, start voltage level [b051]", the output frequency is reduced to the "Instantaneous power failure non-stop function, start frequency decrement [b054]", and then deceleration starts for the "Instantaneous power failure non-stop function, deceleration time [b053]".
- After the power is interrupted during operation, it decelerates to a stop while ensuring that the P-N voltage does not exceed the "Instantaneous power failure non-stop function, target voltage level [b052]".
- During deceleration, if the P-N voltage exceeds the "Instantaneous power failure non-stop function, target voltage level [b052]" due to regeneration, deceleration is stopped and constant speed operation is performed until the P-N voltage falls below [b052].

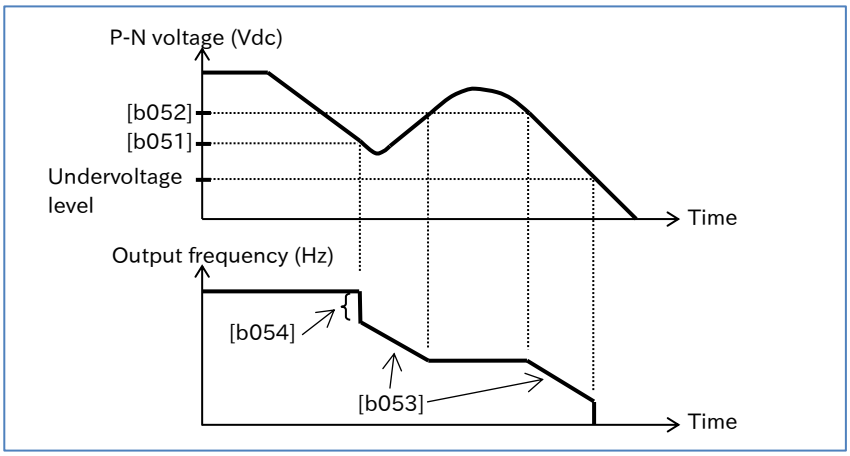


- When "Instantaneous power failure non-stop function, target voltage level [b052]" < "Instantaneous power failure non-stop function, start voltage level [b051]", [b052] is regarded as the same value as [b051] to start operation. (However, this does not change the specified value.)
- Be sure to set [b052] to a value greater than √2 times the input voltage. If [b052] is smaller than √2 times the input voltage, when the power is restored during the operation of this function, the motor operation is maintained at constant speed and cannot be decelerated. (Stop command and changes to frequency command do not work at this time. The power must be turned off and turned back on, or [b052] must be specified again during operation.)
- If [b054] is too large, it may quickly decelerate upon the operation of this function, resulting in an overcurrent error. If [b054] is too small or [b053] is too long, an undervoltage error may occur due to insufficient regenerative power.

## Instantaneous power failure non-stop function, mode selection, "Voltage controlled deceleration-stop " ([b050] = 02, 03)

- When an instantaneous power failure or undervoltage error occurs during operation and the P-N voltage falls to or below [b051], the inverter automatically decelerates the motor while maintaining the P-N voltage at the "Instantaneous power failure non-stop function, target voltage level [b052]".
- When the duration of the instantaneous power failure is short, the operation is able to continue without shutting off the output. However, when an instantaneous power failure also causes an undervoltage error, the output is immediately shut off, ending the operation of this function. After the instantaneous power failure and operation resumption, the "Restart mode selection after instantaneous power failure/undervoltage error [b001]" determines the subsequent operation. For details, refer to "9.9.6 Restarting after Instantaneous Power Failure/ Undervoltage".
- When [b050] is set to "Voltage controlled deceleration-stop (with recovery) (03)", if the power is restored before the output is shut off, normal operation can be resumed. However, depending on the setting of [b052], the inverter may decelerate the motor to stop. Details are as follows:

| [b050] | [b052] | Operation |
|---|---|---|
| 02 (Voltage controlled deceleration-stop (without recovery)) | [b052] > Vre (P-N voltage when the power is received/restored) | Deceleration stop (constant DC voltage control) (Example 1) |
| | [b052] < Vre (P-N voltage when the power is received/restored) | Deceleration stop (normal operation) (Example 2) |
| 03 (Voltage controlled deceleration-stop (with recovery)) | [b052] > Vre (P-N voltage when the power is received/restored) | Deceleration stop (constant DC voltage control) (Example 1) |
| | [b052] < Vre (P-N voltage when the power is received/restored) | Operation (normal operation) (Example 2) |

■ (Example 1) [b052] is greater than the P-N voltage when the power is received/restored

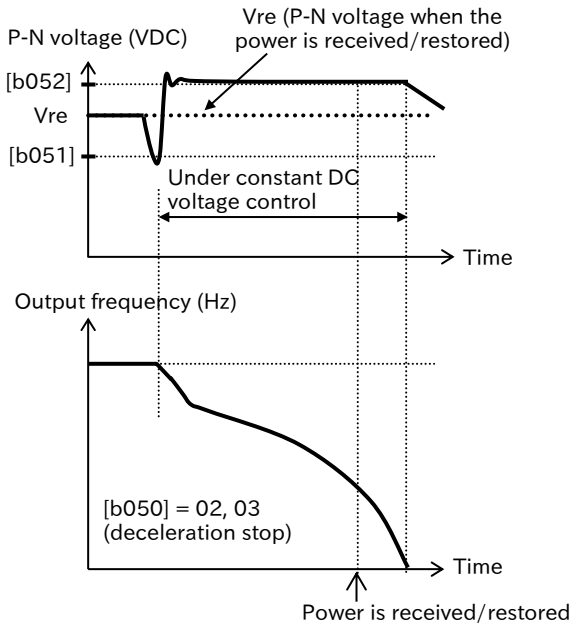


■ (Example 2) [b052] is smaller than the P-N voltage when the power is received/restored

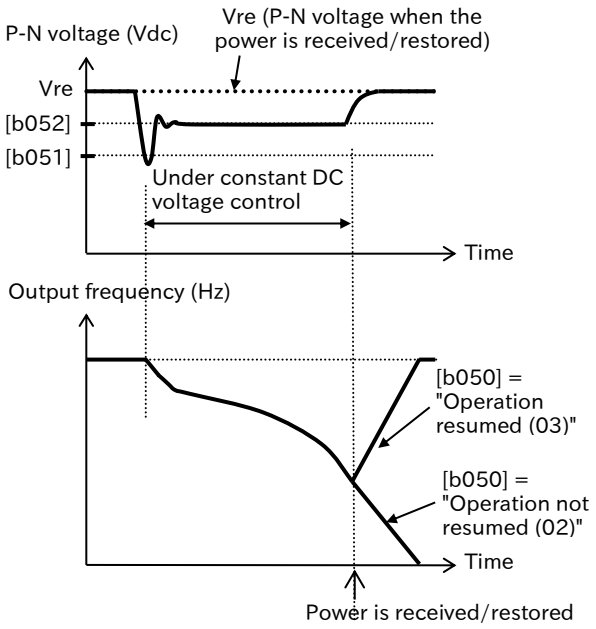


(Note) Depending on the proportional gain ([b133]) or integral gain ([b134]) setting of the constant DC voltage control, the P-N voltage may be lower than that of [b052].

- If the difference between "Instantaneous power failure non-stop function, start voltage level [b051]" and "Instantaneous power failure non-stop function, target voltage level [b052]" is great, when the value specified for "Constant DC voltage control P gain [b133]" is too large, it may quickly accelerate immediately after this function starts, resulting in an overcurrent error.
- Use "Constant DC bus voltage control P gain [b133]" and "Constant DC bus voltage control I gain [b134]" to adjust this function. Setting a larger proportional gain ([b133]) or a shorter integral gain ([b134]) speeds up the response but make it more likely to trip. Setting a smaller proportional gain ([b133]) on the other hand, an undervoltage error may occur due to a voltage drop immediately after this function starts.

# 9.10 Using System Protection Functions

## 9.10.1 Adjusting Carrier Frequency

**Q**

- How to reduce the electromagnetic noise coming from the motor?
- How to reduce the electromagnetic noise emitted by the inverter?
- How to reduce the heat generated by the inverter?
- How to prevent current leakage?

**A**

- The carrier frequency is the frequency of the PWM waveform output from the inverter.
- By setting a larger "Carrier frequency [b083]," the metallic noise from the motor can be reduced. However, electromagnetic noise emitted by the inverter and current leakage may increase. Changing the carrier frequency may also be effective in avoiding resonance in mechanical systems and motors.

**!**

- The setting of "Load type selection [b049]" automatically limits the setting range of the carrier frequency.
- The carrier frequency may be automatically reduced by setting "Automatic carrier reduction selection [b089]" or by the DC braking function.
- The higher the carrier frequency, the more heat the inverter generates. Therefore, derating may be required for the rated output current. The relationship between the carrier frequency and output current derating differs for each model. For details, refer to "17.3 Current Derating".
- When "Control mode selection [A044][*1]" is set to "Sensorless vector control (03)", the carrier frequency is automatically lowered to 2 kHz at low speed to maintain output torque even if "Carrier frequency [b083]" is set to a value exceeding 2 kHz. In addition, since the carrier frequency increases with acceleration, electromagnetic noise, etc. from the motor may vary depending on the output frequency.
- The carrier frequency should be set to at least 10 times the "Maximum frequency [A004]".
  (Example) When [A004] is 590 Hz, [b089] should be 5.9 kHz or higher

| Code | Item | Description | Data |
|---|---|---|---|
| [b083] | Carrier frequency | Sets the carrier frequency of the PWM waveform output from the inverter to the motor. | 2.0 to 15.0 (kHz) (ND mode)<br>2.0 to 10.0 (kHz) (LD mode) |

### Carrier frequency and its extent of the effect

| Carrier frequency | Low ⟺ | High |
|---|---|---|
| Motor electromagnetic sound | Loud | Quiet |
| Electrical noise and current leakage | Low | High |
| Inverter heat generation | Low | High |
| Example of inverter output voltage waveform (PWM output) | Carrier frequency: Low ⟺ 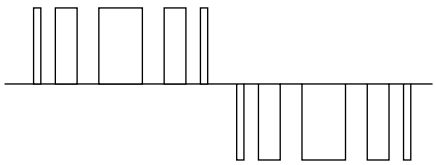 | Carrier frequency: High 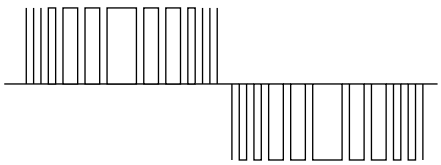 |

*1. "2nd-motor control [SET]" target parameter. The second control parameter is also subject to setting.

## 9.10.2 Automatically Reducing Carrier Frequency

**Q**

- How to automatically lower the carrier frequency according to the output current of the inverter?
- How to automatically lower the carrier frequency according to the temperature of the inverter?

**A**

- The higher the carrier frequency is, the more the internal temperature of the inverter increases, which may cause shorter service life or failure. The automatic carrier frequency reduction function reduces inverter life degradation by automatically lowering the carrier frequency according to the output current or cooling fin temperature.

**!**

- Current derating specifications may require the carrier frequency lower than that of this function. In such cases, lower the "Carrier frequency [b083]" to meet the current derating specifications for each model, or review the operation pattern or system so that the maximum output current becomes smaller. For details, refer to "17.3 Current Derating".
- The carrier frequency fluctuations range from the upper limit of the "Carrier frequency [b083]" to the lower limit of 3 kHz. When [b083] is less than 3 kHz, this function becomes disabled.
- The operating rate is 2 kHz per second when the carrier frequency is changed

| Code | Item | Description | Data |
|---|---|---|---|
| [b089] | Automatic carrier reduction selection | The automatic carrier frequency reduction function is disabled. | 00 |
| | | Reduces the carrier frequency according to the output current. | 01 |
| | | Reduces the carrier frequency according to the cooling fin temperature. | 02 |

### Output current-dependent reduction ([b089] = 01)

- When the output current exceeds a certain percentage of the rated output current, the carrier frequency is reduced.
- The carrier frequency automatically returns to the normal value when the output current is lowered.

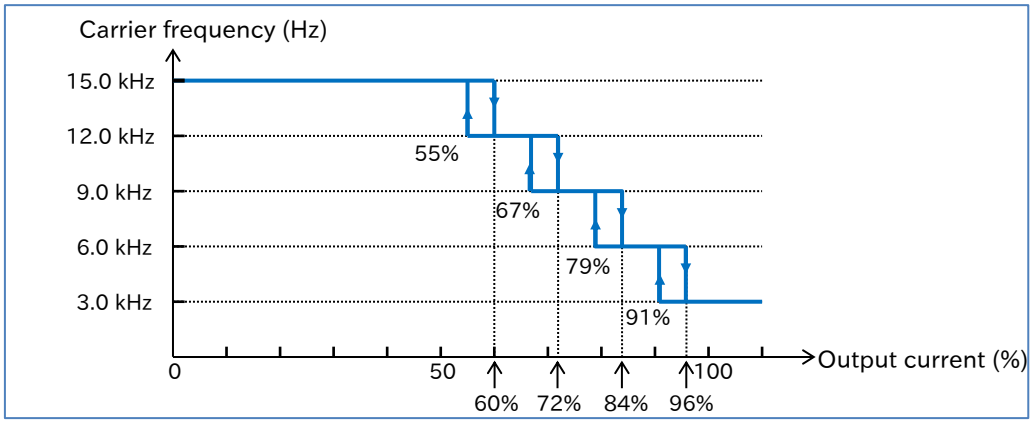


### Cooling fin temperature-dependent reduction ([b089] = 02)

- When the cooling fin temperature exceeds a certain value, the carrier frequency is reduced.
- Carrier frequency automatically returns to the normal value when the temperature drops.

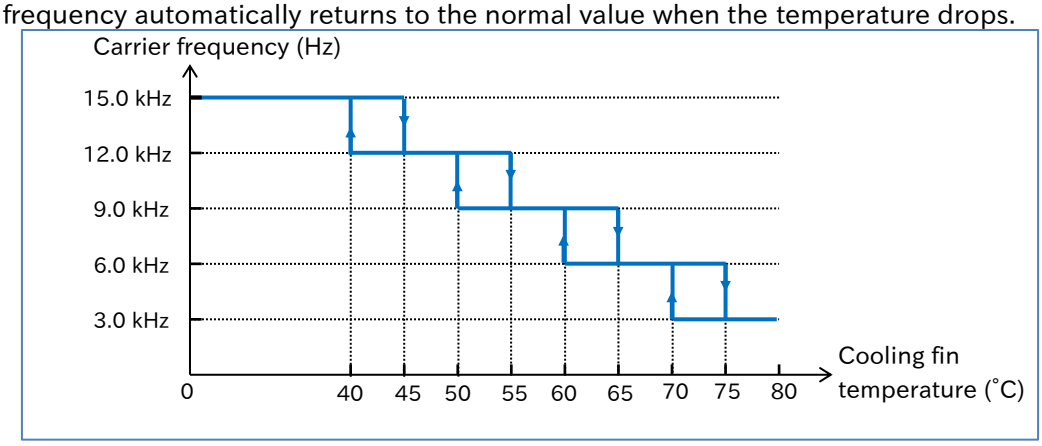

## 9.10.3 Externally Tripping the Inverter

**Q**

- How to force the inverter to shut off output or output an alarm in case of a system error, etc.?

**A**

- External trip function assigns the "External fault [EXT]" to an input terminal and turns on that terminal to generate "External trip error [E12]".
- Use this function when it is necessary to trip the inverter because of an error (trip) signal generated by a peripheral system, etc.

**!**

- When "External trip error [E12]" occurs, the trip cannot be released even when the "External fault [EXT]" terminal is turned off. Reset the system or turn the power off and back on to release the trip.
- When the system is reset while [EXT] is still on, [E12] occurs again.
- Restart after reset is determined depending on the setting of "Restart mode after RS release [C103]". For details, refer to "9.7.5 Starting after Trip Reset or Power-on".
- [E12] occurs when [EXT] is turned on despite the inverter output being stopped.

| Code | Item | Description | Data |
|---|---|---|---|
| [C001] to [C007] | Input terminal function | External fault [EXT]:<br>When this signal is turned on, an "External trip error [E12]" occurs. | 12 |

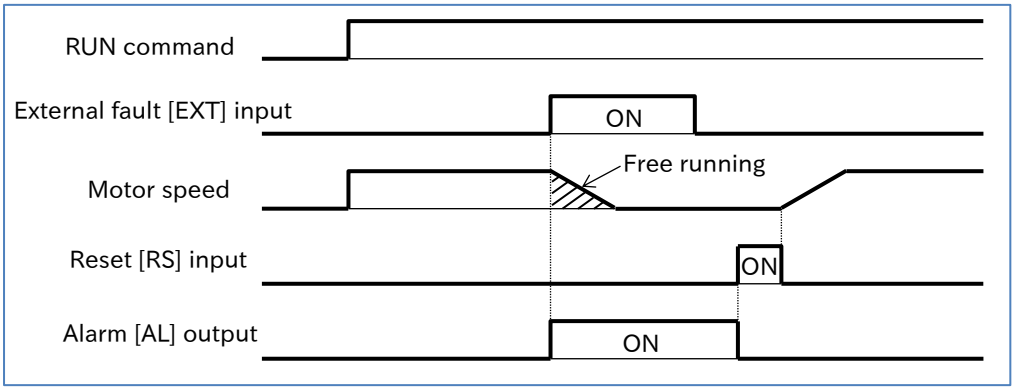

## 9.10.4 Preventing Unattended Start at Power-on

**Q**

- How to prevent the motor from suddenly starting to rotate when the inverter power is turned on?
- If the RUN command is already set when power is turned back on, how to stop the inverter operation as an error?

**A**

- The unattended start protection function generates a "USP error [E13]" to prevent a sudden start when the power is turned on while the RUNcommand to the inverter is still on. When using this function, assign "Unattended start protection [USP]" to the input terminal.
- The "USP error [E13]" trip can be released by turning off the RUN command without performing a reset operation. (Example 1)
- When the trip is released while the RUN command is still on, the inverter starts operating. (Example 2)
- When the RUN command is turned on after the power is turned on, the normal operation starts. (Example 3)

**!**

- Unlike other types of trips, the "USP Error [E13]" is automatically released when the RUN command is turned off.
- This function judges for up to 1 second after control power is established.

| Code | Item | Description | Data |
|---|---|---|---|
| [C001] to [C007] | Input terminal function | Unattended start protection [USP]:<br>When the power is turned on while this signal and the RUN command are also on, a "USP error [E13]" occurs. | 13 |

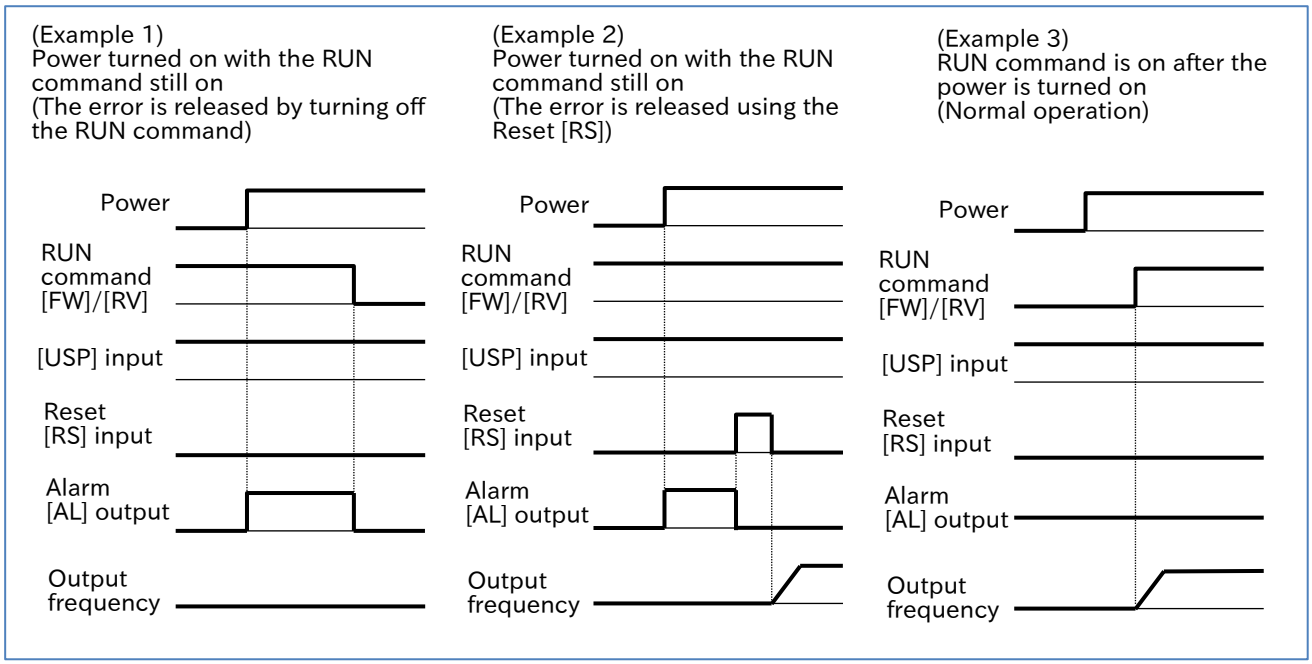

## 9.10.5 Avoiding Mechanical Resonance of Motor and Machine

**Q**

- How to avoid strong vibrations at a certain speed when driving the motor installed in the system?

**A**

- The frequency jump function is used to avoid the resonance points on inverter-driven machines.
- The jump frequency can be set in three locations.
- The output frequency within the range of the jump command varies continuously according to the normal acceleration/deceleration time.

**!**

- When this function is specified, the output frequency cannot be set within the jump frequency range in order to avoid steady operation within the jump frequency range. A warning appears when the frequency command set in [F001]/[A020]/[A220]/[A021] to [A035] is within the frequency range specified in the jump frequency. For details on warnings, refer to "15.3.1 Warning Display".

| Code | Item | Description | Data |
|---|---|---|---|
| [A063] | Jump frequency 1 | Sets the center of the frequency range you want to jump. When 0.00 Hz is specified, the frequency jump function is disabled. | 0.00 to 590.00 (Hz) |
| [A065] | Jump frequency 2 | | |
| [A067] | Jump frequency 3 | | |
| [A064] | Jump frequency width 1 | Sets 1/2 of the frequency range you want to jump. The frequency jumps a range of ± jump width from the jump speed. | 0.00 to 10.00 (Hz) |
| [A066] | Jump frequency width 2 | | |
| [A068] | Jump frequency width 3 | | |

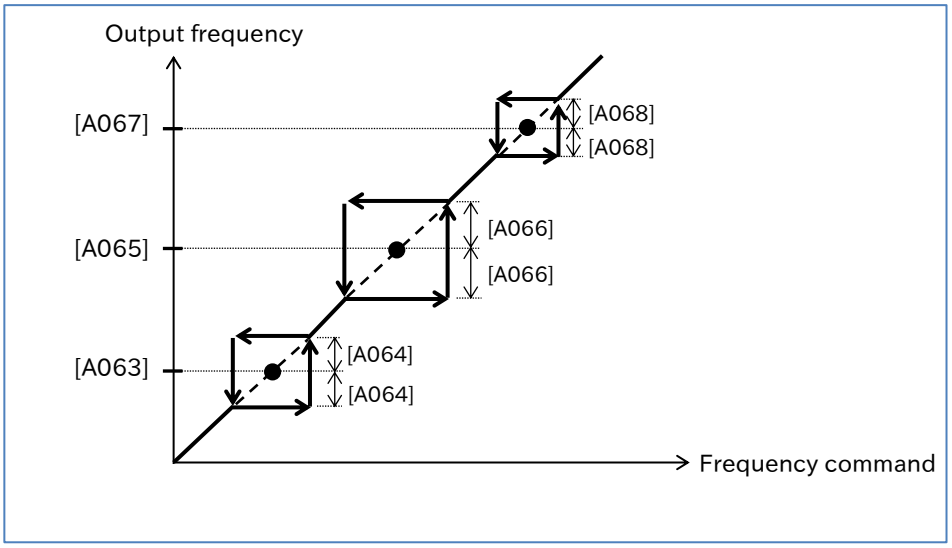

## 9.10.6 Selecting Cooling Fan Operation

Q

- How to always keep running the inverter cooling fan?
- How to operate the cooling fan only when the inverter is running?
- How to stop the noise from the cooling fan when the inverter is stopped?
- How to operate the cooling fan only when heat is generated from the inverter?

A

- Any of the following cooling fan operations can be selected by setting "Cooling fan control method selection [b092]".
  - Always operate the cooling fan.
  - The cooling fan operates only when the inverter is running.
  - The cooling fan operates when the cooling fin temperature reaches approximately 40˚C or higher.

!

- When an instantaneous power failure or power interruption occurs when the cooling fan is running, the cooling fan temporarily stops and automatically resume operation after power is restored.
- For details on life assessment of the cooling fan, "Cooling-fan life warning [WAF]" output signal, and cumulated cooling fan operating hours, refer to "9.11.8 Outputting a Warning for Cooling Fan Life", "10.3.3 Monitor the Results of Lifetime Diagnosis", and "16.2.6 Life Warning Output".

| Code | Item | Description | Data |
|---|---|---|---|
| [b092] | Cooling fan control method selection | Always operates | 00 |
| | | Operates when the inverter is in operation:<br>When the inverter is in operation, the cooling fan operates automatically. It also operates for 3 minutes after the inverter operation is stopped.<br>However, when the cooling fin temperature is still above 50˚C after 3 minutes have passed, the cooling fan continues to operate until the temperature drops below 50˚C and stops after another 3 minutes.<br>*Even when the operation is stopped, the cooling fan starts operating if the cooling fin temperature exceeds 60˚C. | 01 |
| | | Cooling fin temperature-dependent:<br>The cooling fan operates when the inverter cooling fin temperature exceeds approximately 40˚C.<br>The cooling fan stops when the cooling fin temperature remains equal to or below 40˚C for 3 minutes. | 02 |

## 9.10.7 Monitoring Motor Temperature

Q

- How to provide thermal protection for the motor?
- How to use the resistance of the thermistor in the motor to provide temperature protection?

A

- A thermistor installed in the motor and other external devices can be wired to the inverter and set to function to provide temperature protection for external devices.
- An external thermistor should be wired between the input terminal [5] and [L]. At this time, assign an "External thermistor [PTC] (19)" to the input terminal [5]. When assigning [PTC], the [L] terminal is the common terminal regardless of the sink/source logic.
- If the resistance of the PTC thermistor becomes approximately 3 kΩ or more, a "Thermistor error [E35]" occurs. To fine-tune the resistance value that generates [E35] or to change the temperature setting for generating an error according to the characteristics of the thermistor used, adjust the value of "Thermistor gain adjustment [C085]".

!

- Use twisted wires for wiring the [PTC] terminal and [L] terminal of the external thermistor to separate from other [L] common wires. The wiring distance should be within 20 m. For wiring, also refer to "5.4 Control Circuit Terminal".
- Since the current flowing in the thermistor is small, consider separation of wiring to avoid noise caused by motor current, etc.

| Code | Item | Description | Data |
|---|---|---|---|
| [C005] | Input terminal [5] function | External thermistor [PTC]:<br>A PTC thermistor can be wired to [PTC] terminal and inverter can detect the temperature of the motor and other external devices. | 19 |
| [C085] | Thermistor gain adjustment | This allows for fine-tuning the setting of "Thermistor error [E35]" for the operation resistance value of the connected thermistor.<br>To trip the inverter with the PTC thermistor's resistance value smaller than 3 kΩ, increase the value of this setting.<br>To trip the inverter with the PTC thermistor's resistance value greater than 3 kΩ, decrease the value of this setting. | 0.0 to 200.0 (%) |

# 9.11 Outputting Warning Signals to Terminals

## 9.11.1 Outputting an Alarm Signal

Q

- How to detect an error condition in the inverter and inform the system?

A

- Assigning an "Alarm [AL] (05)" to one of the output terminal functions ([C021]/[C022]/[C026]) will output an alarm signal when the inverter trips.
- Output terminal active state ([C031]/[C032]/[C036]) allows you to individually set contact a (NO: Normally Open) or contact b (NC: Normally Close) output specifications to the output terminals [11]/[12] and the relay output terminals [AL1]-[AL0]/[AL2]-[AL0].
- In the initial state, the "Alarm [AL] (05)" signal is assigned to the contact c relay of [AL1]-[AL0]/ [AL2]-[AL0].
  - "Output terminal [AL] function [C026]" = "Alarm [AL] (05)"
  - "Output terminal [AL] active state [C036]" = "NC: Normally Closed (01)"

!

- If the system recognizes an error during the inverter power interruption, changing the wiring and selecting different contact point may improve the situation.
- In the factory default state, [AL2]-[AL0] is "close" when the power is turned off, and "open" when the power is turned on and there is no error in the inverter, as shown in the table below. To avoid this condition, set "Output terminal [AL] active state (C036)" to "NO: Noramlly Open (00)" or change the wire where the error was detected.
- For electrical specifications of the relay contacts [AL1]-[AL0]/ [AL2]-[AL0], refer to "5.4 Control Circuit Terminal".

| Active state | Power state | Inverter state | Output terminal status | |
|---|---|---|---|---|
| | | | [AL1]-[AL0] | [AL2]-[AL0] |
| 00 | ON | Trip | Close | Open |
| | | Normal | Open | Close |
| | OFF | - | Open | Close |
| 01 (Initial value) | ON | Trip | Open | Close |
| | | Normal | Close | Open |
| | OFF | - | Open | Close |

| Code | Item | Description | Data |
|---|---|---|---|
| [C021] [C022] [C026] | Output terminal function | Alarm [AL]: This signal turns on when a trip occurs. | 05 |
| [C031] [C032] [C036] | Output terminal active state | Operates as Contact a (NO: Normally Open). | 00 |
| | | Operates as Contact b (NC: Normally Closed). | 01 |

## 9.11.2 Outputting a Major Failure Signal

Q

- How to detect an error condition that cannot be reset in the inverter and inform the system?

A

- Assigning a "Major failure [MJA] (53)" to one of the output terminal functions ([C021]/[C022]/[C026]) enables the inverter to output a major failure signal.
- Trips that are determined to be major failures are shown in the table below. If any of these occurs, the trip cannot be released by resetting.

!

- If this signal is output, the inverter hardware may be malfunctioning. Please confirm the trip history and take appropriate action.

| Error code | Name | Description |
|---|---|---|
| E08 | Memory error | There is an abnormality in the memory element of the inverter. |
| E11 | CPU error | There is an abnormality in the drive CPU of the inverter. |
| E14 | Ground fault | The inverter has ground fault. |
| E30 | Driver error | There is an abnormality in the main element of the inverter. |

| Code | Item | Description | Data |
|---|---|---|---|
| [C021]<br>[C022]<br>[C026] | Output terminal function | Major failure [MJA]:<br>This signal turns on when an error (a trip shown in the table above) that is determined to be a major failure occurs. | 53 |

## 9.11.3 Outputting a Warning When Overload Occurs

**Q**

- How to be notified of the increase in the motor output current by a warning signal?
- How to be notified of the increase in motor current as soon as possible?

**A**

- Assigning an "Overload warning notice [OL] (03)" or "Overload warning notice 2 [OL2] (26)" to one of the output terminal functions ([C021]/[C022]/[C026]) enables the inverter to output an overload warning signal.
- The overload warning signal is output when the output current exceeds the overload warning level.
- By changing the "Overload signal output mode selection [C040]", the signal can be output according to the operating status.

**!**

- If the overload warning level is set too high, an overcurrent error may occur before the overload warning signal is output. In this case, lower the overload warning level.
- When an analog input is used for the output frequency command input source, the frequency command input may not be determined as constant speed due to fine fluctuations in the frequency input. In this case, change the "Overload signal output mode selection [C040]" to "Enable during running (00)" or increase the "Analog input filter time constant [A016]".

| Code | Item | Description | Data |
|---|---|---|---|
| [C040] | Overload signal output mode selection | Enabled during running | 00 |
| | | Enabled only during constant speed | 01 |
| [C041]*1 | Overload warning level | Sets the output current level at which the overload warning signal is output. | (0.00 to 2.00) × inverter rated current (A) |
| [C111] | Overload warning level 2 | | |
| [C902] | Overload signal filter time constant | Sets the filter that acts on the [OL], [OL2], and [LOC] detection levels. | 0 to 9,999 (ms) |
| [C021]<br>[C022]<br>[C026] | Output terminal function | Overload warning notice [OL]:<br>This signal turns on when the output current exceeds the overload warning level. | 03 |
| | | Overload warning notice 2 [OL2]:<br>This signal turns on when the output current exceeds the overload warning level 2. | 26 |

*1. Parameter for "Second Control [SET]". ting also applies to the second control parameter.

### ■ When [C040] is set to "Enable during running (00)"

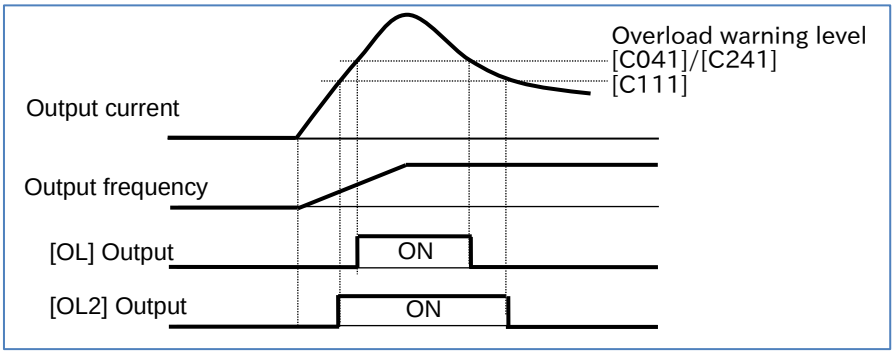


### ■ When [C040] is set to "Enable only during constant speed (01)"

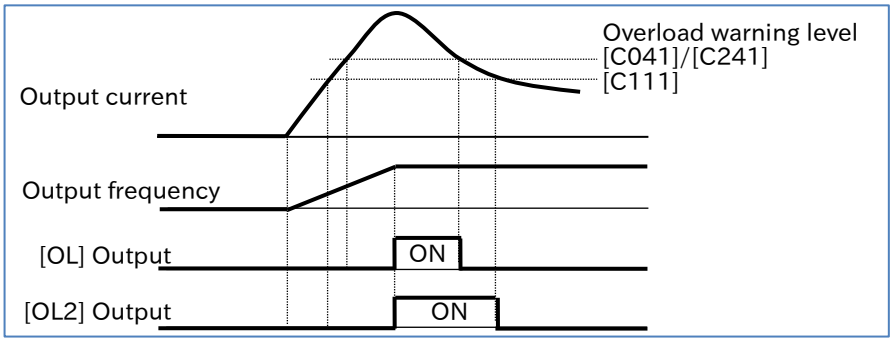

## 9.11.4 Outputting a Warning When Current Is Low

**Q**

- How to make a notification that the output current of the motor has dropped?
- How to detect a decrease in the motor current when a load is released?

**A**

- Assigning "Low current signal [LOC] (43)" to one of the output terminal functions ([C021]/[C022]/[C026]) enables the inverter to output a low current signal.
- A low current detection signal can be output when the load becomes lighter.
- The low current signal is output when the output current falls below the "Low current detection level [C039]".
- By changing the "Low current signal output mode selection [C038]", the signal can be output according to the operating state.

**!**

- When an analog input is used for the output frequency command input source, the frequency command input may not be determined as constant speed due to fine fluctuations in the frequency input. In this case, change the "Low current signal output mode selection [C038]" to "Enable during running (00)" or increase the "Analog input filter time constant [A016]".

| Code | Item | Description | Data |
|---|---|---|---|
| [C038] | Low current signal output mode selection | Enable during running. | 00 |
| | | Enable only during constant speed | 01 |
| [C039] | Low current detection level | Sets the output current level at which the overload warning signal is output. | (0.00 to 2.00) × inverter rated current (A) |
| [C902] | Overload signal filter time constant | Sets the filter that acts on the [OL], [OL2], and [LOC] detection levels. | 0 to 9,999 (ms) |
| [C021]<br>[C022]<br>[C026] | Output terminal function | Low current signal [LOC]:<br>This signal turns on when the output current falls to or below the low current detection level. | 43 |

### ■ When [C038] is set to "Enabled during running (00)"

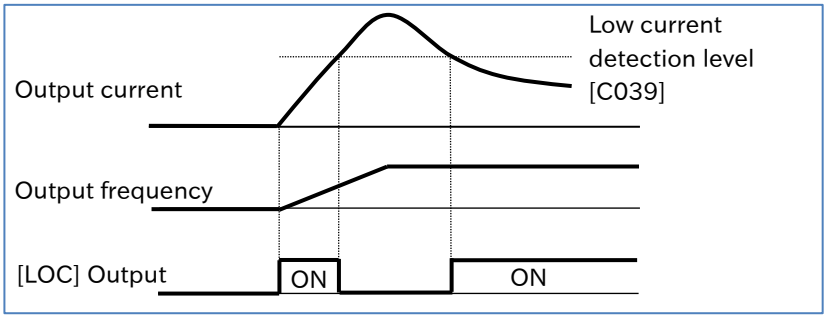


### ■ When [C038] is set to "Enabled only during constant speed (01)"

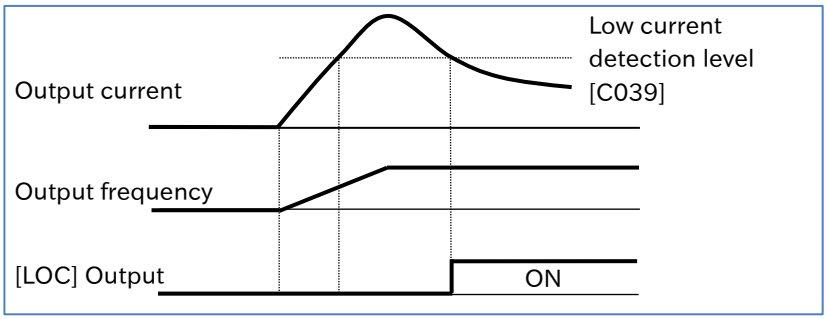

## 9.11.5 Outputting a Warning before Electronic Thermal Protection

**Q**

- How to monitor the output current of the motor and output a signal before the electronic thermal error?
- How to cool down the system before a thermal error occurs?

**A**

- Assigning "Electronic thermal alarm (Motor) [THM] (13)" to one of the output terminal functions ([C021]/[C022]/[C026]) enables the inverter to output an electronic thermal warning signal.
- The status can be notified by a signal before an "Overload error [E05]" is issued by the electronic thermal function.

**!**

- When the electronic thermal integrated value reaches 100.0%, an "Overload error [E05]" occurs.
- For details on electronic thermal settings, see "8.1.4 Setting the Electronic Thermal for the Motor".

| Code | Item | Description | Data |
|---|---|---|---|
| [d104] | Electronic thermal load ratio monitor (Motor) | Monitors the electronic thermal load ratio. When the monitored value reaches 100.0%, an "Overload error [E05]" occurs. | 0.0 to 100.0 (%) |
| [C061] | Electronic thermal warning level (Motor) | Sets the overload level which turns on the "Electronic thermal alarm (Motor) [THM]". When this is set to 0, it will not function. | 0 (Disabled)/ 1 to 100 (%) |
| [C021] [C022] [C026] | Output terminal function | Electronic thermal alarm (Motor) [THM]: This signal turns on when the "Electronic thermal load ratio monitor (Motor) [d104]" is equal to or greater than the [C061] setting value. | 13 |

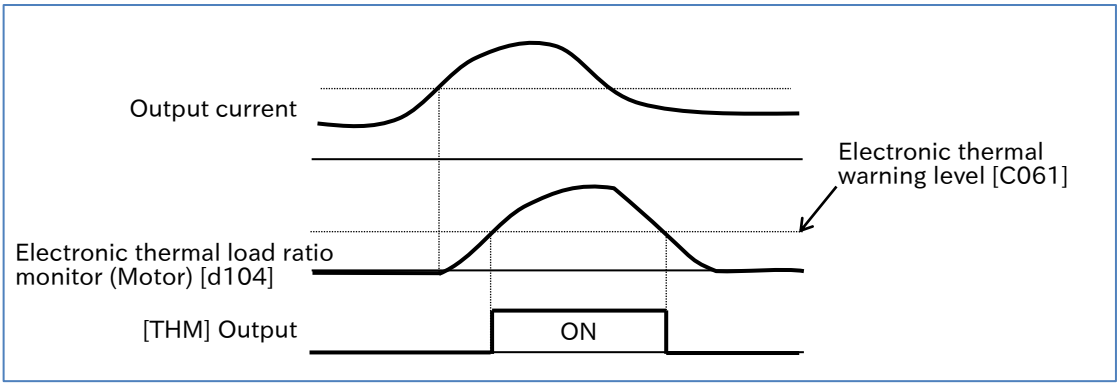

## 9.11.6 Outputting a Warning When Cooling Fin Temperature Rises

**Q**

- How to be notified of the temperature rise of the cooling fin before a trip occurs?
- How to cool the system before a temperature error occurs?

**A**

- Assigning "Cooling fin overheat warning [OHF] (42)" to one of the output terminal functions ([C021]/[C022]/[C026]) enables the inverter to output a warning signal when the cooling fin is overheated.
- The temperature of the cooling fin inside the inverter is monitored and the status can be notified by a signal before a "Cooling fin temperature error [E21]" occurs.

**!**

- The "Cooling fin temperature error [E021]" occurs when the cooling fin exceeds the maximum temperature of 105˚C.

| Code | Item | Description | Data |
|---|---|---|---|
| [d018] | Cooling fin temperature monitor | Monitors the temperature of the cooling fin. | -20 to 150.0 (˚C) |
| [C064] | Cooling fin overheat warning level | Sets the cooling fin temperature which turns on the cooling fin overheat warning [OHF]. | 0 to 110 (˚C) |
| [C021]<br>[C022]<br>[C026] | Output terminal function | Cooling fin overheat warning [OHF]:<br>This signal turns on when the "Cooling fin temperature monitor [d018]" exceeds the [C064] setting value. | 42 |

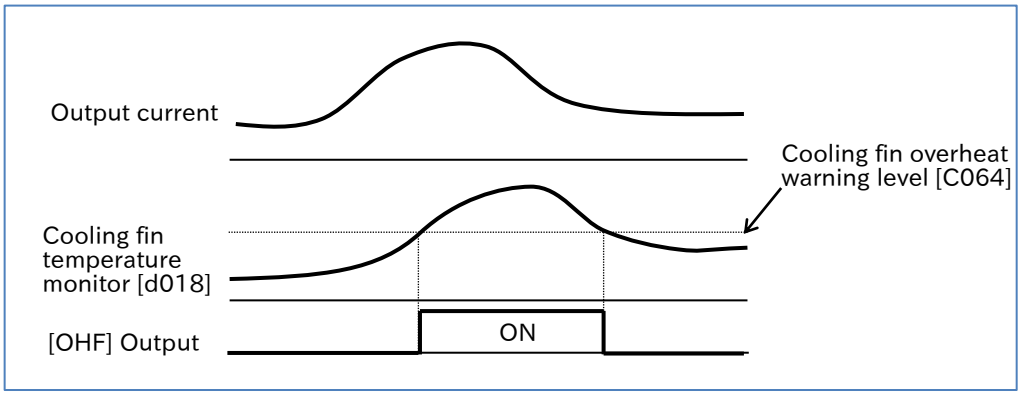

## 9.11.7 Outputting a Warning for Capacitor Life on the Control Board

**Q**

- How to be notified before the electrolytic capacitor on the board reaches the end of life?

**A**

- Assigning "Capacitor life warning [WAC](39)" to one of the output terminal functions ([C021]/[C022]/[C026]) enables the inverter to output a warning signal for the life of the electrolytic capacitor on the control board.
- The life of the capacitor on the board can be assessed based on the temperature inside the inverter and the accumulated power-on time.
- The status of this signal can also be monitored by the "Life assessment monitor [d022]".

**!**

- When a capacitor life warning occurs, it is recommended to replace the main circuit board, logic board, etc.

| Code | Item | Description | Data |
|---|---|---|---|
| [d022] | Life assessment monitor | Indicates the life assessment of the electrolytic capacitor on the board and the cooling fan. | ON: Expired<br>OFF: Normal<br> 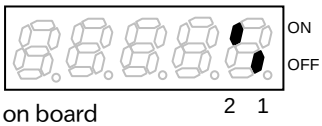 <br><br>1: Capacitor on board<br>2: Cooling fan |
| [C021]<br>[C022]<br>[C026] | Output terminal function | Capacitor life warning [WAC]:<br>Outputs a life warning for the electrolytic capacitor on the logic board.<br>OFF: No warning<br>ON: Time to replace the board due to capacitor life expiration | 39 |

## 9.11.8 Outputting a Warning for Cooling Fan Life

**Q**

- How to be notified before the cooling fan reaches the end of life?

**A**

- Assigning "Cooling-fan life warning [WAF](40)" to one of the output terminal functions ([C021]/[C022]/[C026]) enables the inverter to output a cooling fan life warning signal.
- The life of the cooling fan is estimated based on the accumulated operating hours of the cooling fan and the ambient temperature set for "Ambient temperature [b075]", and a signal is output when the replacement time is reached.
- After replacing the cooling fan, life of the replaced new cooling fan can be assessed by clearing the accumulated operating hours using the "Accumulated cooling fan run time clear [b093]".
- The status of this signal can also be monitored by the "Life assessment monitor [d022]".

**!**

- When this signal is output, check the cooling fan for clogging, etc.
- Do not clear the accumulated operating hours except when replacing the cooling fan, as the cooling fan life assessment will not function properly.
- When the fan is stopped due to "Cooling fan control method selection [b092]", the cooling fan operating hours are not accumulated.

| Code | Item | Description | Data |
|---|---|---|---|
| [d022] | Life assessment monitor | Indicates the life assessment of the electrolytic capacitor on the board and the cooling fan. | ON: Expired<br>OFF: Normal<br> 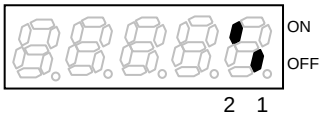 <br><br>1: Capacitor on board<br>2: Cooling fan |
| [b075] | Ambient temperature | Set the ambient temperature of the operating environment. | -10 to 50 (˚C) |
| [b093] | Accumulated cooling fan run time clear | Clears the accumulated operating hours of the cooling fan. | 00:Disabled<br>01:Clear |
| [C021]<br>[C022]<br>[C026] | Output terminal function | Cooling-fan life warning [WAF]:<br>Outputs a cooling fan life warning.<br>OFF: No warning<br>ON: Time to replace the board due to cooling fan life expiration | 40 |

## 9.11.9 Outputting a Warning When RUN Time or Power-on Time Elapses

Q
- How to be notified when the inverter has been running for a certain amount of time?
- How to be notified when the inverter power has been on for a certain amount of time?
- How to output a signal for the operating hours of the system incorporating the inverter?

A
- By assigning "Accumulated RUN time over [RNT] (11)" or "Accumulated power-on time over [ONT] (12)" to one of the output terminal functions ([C021]/[C022]/[C026]), a signal can be output when the operation time or power-on time exceeds the specified time.
- When the accumulated operation time of the inverter exceeds the time set in "Accum. RUN time (RNT) / Accum. power-on time (ONT) [b034]", "Accumulated RUN time over [RNT](11)" is output.
- If the accumulated power-on time of the inverter exceeds the time set in "Accum. RUN time (RNT) / Accum. power-on time (ONT) [b034]", "Accumulated power-on time over [ONT](12)" is output.

!
- When setting the values as a rough guide for replacing the inverter, make sure you allow enough time before replacement.

| Code | Item | Description | Data |
|---|---|---|---|
| [d016] | Accumulated RUN time monitor | Accumulates and stores the inverter operation time to monitor the inverter. | 0 to 999,000 (hr) |
| [d017] | Accumulated power-on time monitor | Accumulates and stores the inverter power-on time to monitor the inverter. | 0 to 999,000 (hr) |
| [b034] | Accum. RUN time (RNT)/ Accum. power-on time (ONT) | Sets the elapsed time to output Accumulated RUN time over [RNT] or Accumulated power-on time over [ONT]. | 0 to 65,535 (× 10 hr) |
| [C021]<br>[C022]<br>[C026] | Output terminal function | Accumulated RUN time over [RNT]:<br>Outputs an Accumulated RUN time over signal.<br>OFF: Below the set time<br>ON: Equal to or over the set time | 11 |
| | | Accumulated power-on time over [ONT]:<br>Outputs an Accumulated power-on time over signal.<br>OFF: Below the set time<br>ON: Equal to or over the set time | 12 |

### ■ Example of [RNT]/[ONT] setting

| | Accumulated RUN time over [RNT]/<br>Accumulated power-on time over [ONT] output conditions | [b034] |
|---|---|---|
| Example 1 | Issue a warning when the inverter has been operated for 250 days/year × 8 hours × 5 years = 10,000 hours since the factory default setting. | 10000 |
| Example 2 | Issue a warning when the inverter has been operated for another 250 days/year × 8 hours × 3 years = 6,000 hours since (Example 1). | 16000<br>(10000+6000) |
| Example 3 | Issue a warning when the inverter power has been on for 300 days/year × 24 hours × 3 years = 21,600 hours since the factory default setting. | 21600 |
| Example 4 | Issue a warning when the inverter power has been on for another 250 days/year × 8 hours × 5 years = 10,000 hours since (Example 3). | 31600<br>(21600+10000) |

## 9.11.10 Detecting Analog Input Disconnection/Out of Range

**Q**

- How to know if the analog input value is within the specified range?
- How to detect analog input disconnection?
- How to keep the inverter running at a constant frequency even in the event of analog disconnection or short circuit failure?

**A**

- By assigning "Analog [Ai1] disconnection detection [Ai1Dc] (27)", "Analog [Ai2] disconnection detection [Ai2Dc] (28)", "Window comparator [Ai1] [WCAi1] (54)", or "Window comparator [Ai2] [WCAi2] (55)" to one of the output terminal function ([C021]/[C022]/[C026]), an analog disconnection detection signal and a window comparator signal can be output.
- The [WCAi1] or [WCAi2] ([Ai1DC] or [Ai2DC]) signal is output when the analog input [Ai1] or [Ai2] value is within the upper and lower limits of the window comparator. Disconnection detection and other analog inputs can be monitored at any level.
- Hysteresis width can be set within the upper and lower limits of the window comparator.
- The level and hysteresis width can be set individually for each analog input [Ai1] and [Ai2].
- To run the inverter with a specific frequency command even when the analog input becomes the maximum value due to a short circuit fault or when the analog input becomes 0 V due to disconnection, set the operation level in the event of disconnection.

**!**

- When the [WCAi1] or [WCAi2] signal is output due to disconnection, etc., the [Ai1] or [Ai2] operation set level at disconnection or compare event ([b070] or [b071]) can be used as the analog input value instead of the actual analog input. When "no (Disabled)" is set, the analog input value is used as it is. However, when the "Analog command holding [AHD] (65)" function is enabled, the held input value is given priority.
- The upper and lower limit settings for the window comparator are independent of the external frequency start/end functions ([A011] to [A015] and [A101] to [A105]). Set the voltage as a percentage (%) of 0 to 10 VDC and the current as a percentage (%) of 4 to 20 mA.
- When using this function to detect disconnection, set the analog input value to be determined as disconnection to the Window comparator upper limit ([b060] or [b063]).
- When using this function to detect short-circuit, set the analog input value to be determined as a short-circuit to the "Window comparator lower limit ([b061] or [b064])".

| Code | Item | Description | Data |
|---|---|---|---|
| [b060] | [Ai1] window comparator upper limit | Sets the upper limit of the window comparator.<br>(The lower limits of the Ai1 and Ai2 upper limit setting ranges are [b061] + ([b062] × 2) and [b064] + ([b065] × 2), respectively.) | 0 to 100 (%) |
| [b063] | [Ai2] window comparator upper limit | | |
| [b061] | [Ai1] window comparator lower limit | Sets the lower limit of the window comparator.<br>(The upper limits of the Ai1 and Ai2 lower limit setting ranges are [b060] - ([b062] × 2) and [b063] - ([b065] × 2), respectively.) | 0 to 100 (%) |
| [b064] | [Ai2] window comparator lower limit | | |
| [b062] | [Ai1] window comparator hysteresis width | Sets the hysteresis width for the upper and lower limits.<br>(The upper limits of the Ai1 and Ai2 hysteresis width setting ranges are ([b060] - [b061]) / 2 and ([b063] - [b064]) / 2, respectively.) | 0 to 10 (%) |
| [b065] | [Ai2] window comparator hysteresis width | | 0 to 10 (%) |
| [b070] | [Ai1] operation set level at disconnection or compare event | Sets the analog input value used when [WCAi1]/[WCAi2]/[AI1Dc]/[Ai2Dc] are output. | no (Disable)/<br>0 to 100 (%) |
| [b071] | [Ai2] operation set level at disconnection or compare event | | |
| [C021]<br>[C022]<br>[C026] | Output terminal function | Analog [Ai1] disconnection detection [Ai1Dc] /<br>Analog [Ai2] disconnection detection [Ai2Dc]:<br>Outputs an analog disconnection signal. | 27/28 |
| | | Window comparator [Ai1] [WCAi1]/<br>Window comparator [Ai2] [WCAi2]:<br>Outputs a window comparator signal. | 54/55 |

## Window comparator operation example 1: When [b070]/[b071] is set to "no (Disable)"

- If the "[Ai1] operation set level at disconnection or compare event [b070]" or "[Ai2] operation set level at disconnection or compare event [b071]" is set to "No (Disabled)", the [WCAi1] or [WCAi2] ([Ai1Dc] or [Ai2Dc]) signal is output when the analog input value is within the window comparator upper and lower limit range.

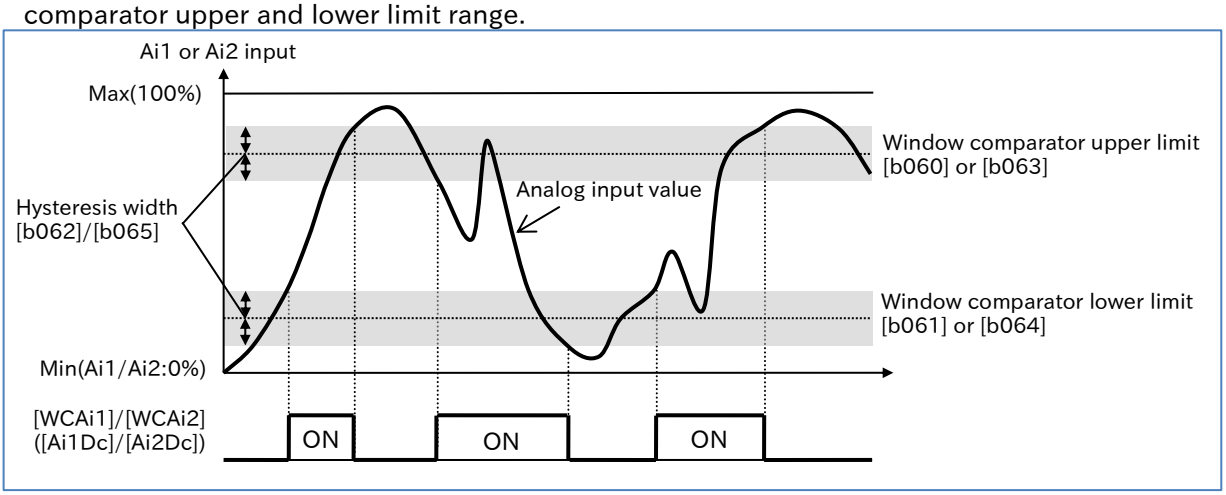


## Window comparator operation example 2: Example of disconnection detection

- If the lower limit, upper limit, and operation set level at disconnection or compare event are set as shown in the figure below, the analog disconnection detection signal turns on when the analog input reaches the minimum value due to disconnection, and the operation set level at disconnection or compare event will be used as the analog input value instead of the actual analog input value.

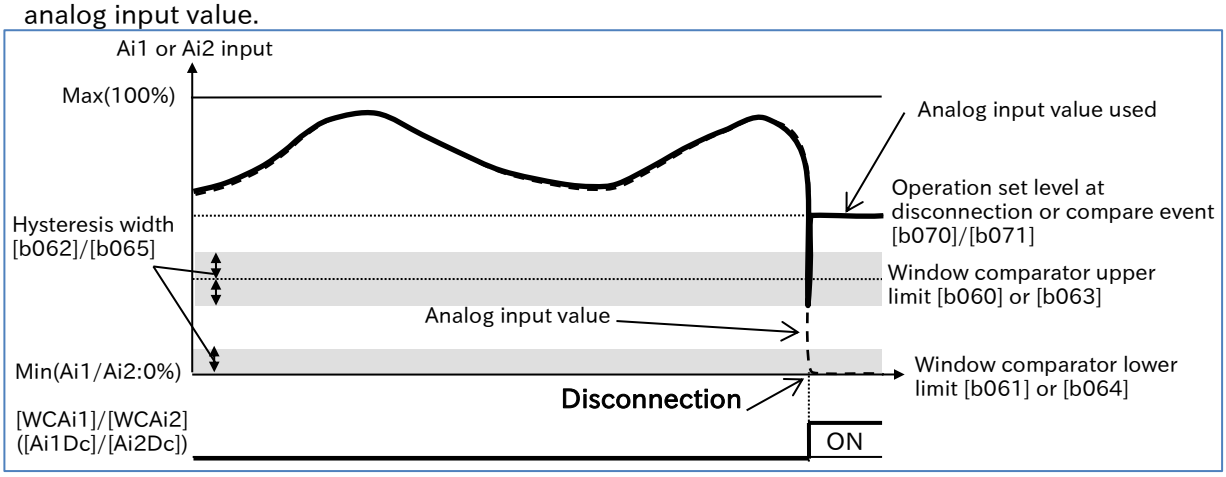


## Window comparator operation example 3: Example of short-circuit detection

- If the lower limit, upper limit, and operation set level at disconnection or compare event are set as shown in the figure below, the analog disconnection detection signal turns on when the analog input reaches the maximum value due to a short circuit, and the operation set level at disconnection or compare event will be used as the analog input value instead of the actual analog input value.

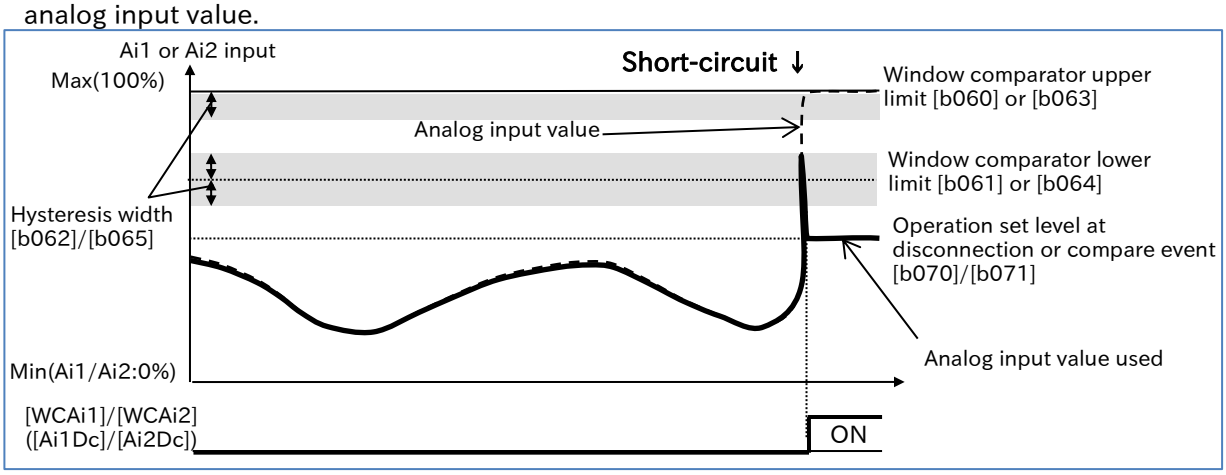

# 9.12 Outputting Running Status to Terminals

## 9.12.1 Outputting a Signal during Running

Q

- How to detect the output status of the inverter and inform the system?

A

- Assigning "Running [RUN] (00)" to one of the output terminal functions ([C021]/[C022]/[C026]) enables the inverter to output a running signal.

!

- In addition to nomal motor operation, when a voltage is output to the motor as function such as during DC braking, the [RUN] signal is turned on.
- The [RUN] signal is not output during the retry wait time or waiting for DC braking.

| Code | Item | Description | Data |
|---|---|---|---|
| [C021]<br>[C022]<br>[C026] | Output terminal function | Running [RUN]:<br>This signal is output during inverter operation. | 00 |

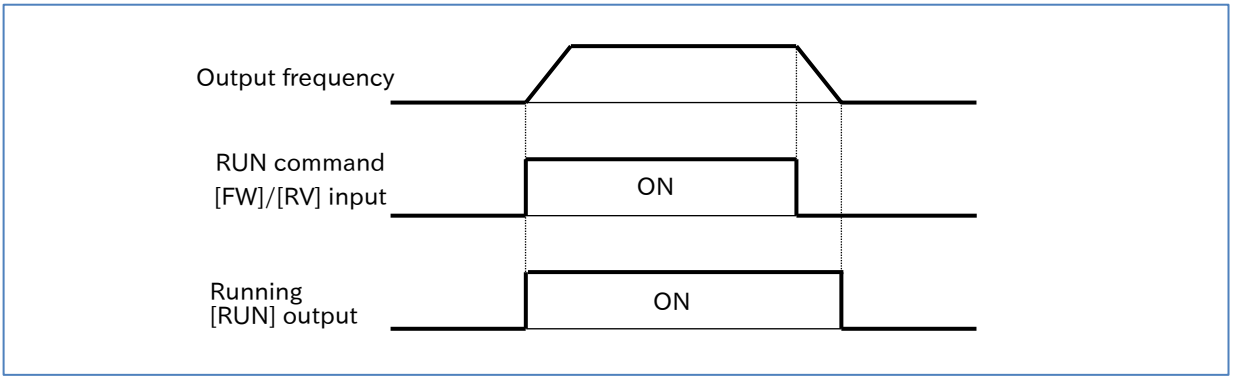

## 9.12.2 Outputting a Signal during Forward/Reverse Running

Q
- How to detect information during the forward rotation of the inverter and inform the system?
- How to detect information during the reverse rotation of the inverter and inform the system?

A
- Assigning "Forward rotation [FWR] (51)" or "Reverse rotation [RVR] (52)" to one of the output terminal functions ([C021]/[C022]/[C026]) enables the inverter to output a forward/reverse rotation signal.

!
- The [FWR]/[RVR] signal is not output while the voltage is being output from the inverter to the motor due to DC injection braking or other reasons.

| Code | Item | Description | Data |
|---|---|---|---|
| [C021]<br>[C022]<br>[C026] | Output terminal function | Forward rotation [FWR]:<br>This signal is output during inverter forward rotation. | 51 |
| | | Reverse rotation [RVR]:<br>This signal is output during inverter reverse rotation. | 52 |

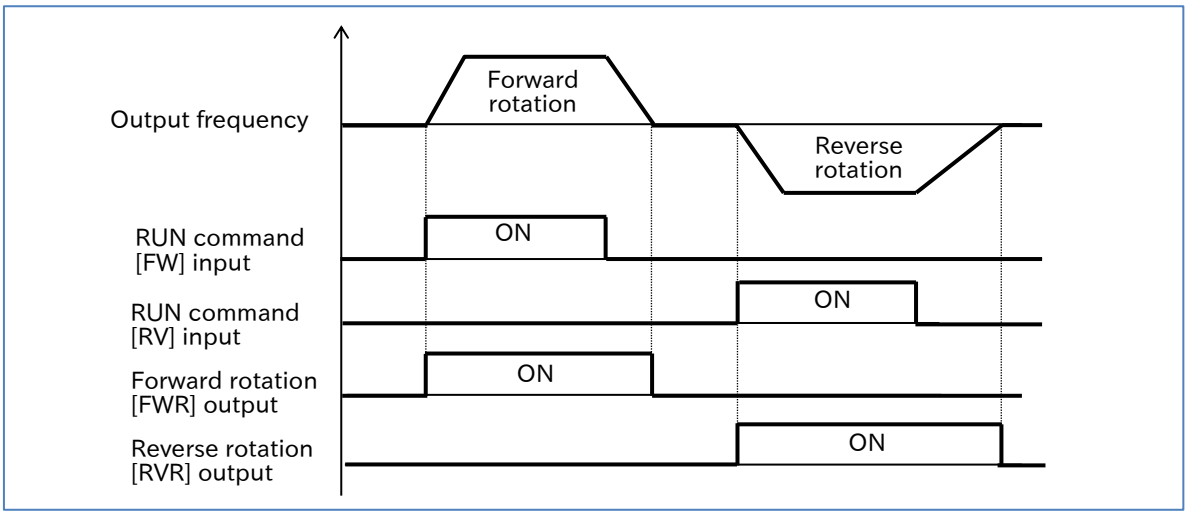

## 9.12.3 Outputting a Signal When RUN Command Is Given

**Q**

- How to detect that the inverter has received RUN commands and inform the system?

**A**

- Assigning "RUN command active [FR] (41)" to one of the output terminal functions ([C021]/[C022]/[C026]) enables the inverter to output a RUN command active signal.
- The [FR] signal is output while the inverter is receiving a RUN command.
- The [FR] output signal is output based on the RUN command reception status, even if the RUN command input source is not the [FW]/[RV] input terminals.

**!**

- When the RUN command signal is assigned to an input terminal, if "Forward rotation [FW](00)" and "Reverse rotation [RV](01)" RUN commands are received from the input terminal simultaneously, a stop command will be issued as a result of the command inconsistency. In this case, "RUN command active [FR] (41)" is not output.
- The [FR] signal is output even when the DC voltage is being output from the inverter to the motor due to DC braking or other reasons.

| Code | Item | Description | Data |
|---|---|---|---|
| [C021]<br>[C022]<br>[C026] | Output terminal function | RUN command active [FR]:<br>This signal is output when an RUN command is received. | 41 |

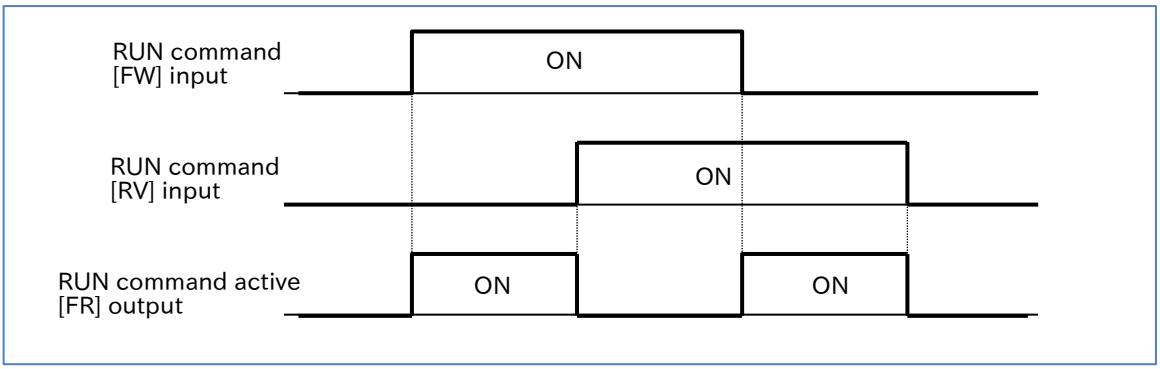

## 9.12.4 Outputting a Signal When Inverter Is Ready to Run

**Q**

- How can I inform the system that the inverter is ready to operate with a RUN command?

**A**

- Assigning "Inverter ready [IRDY] (50)" to one of the output terminal functions ([C021]/[C022]/[C026]) enables the inverter to output an inverter ready signal.
- The [IRDY] signal is output when the inverter is ready to accept a RUN command.

**!**

- The system does not function even if RUN commands are input if this signal has not been output.
- This signal remains off while output is unavailable, such as during startup preparations when turning the power on, undervoltage, tripping, a free-run stop command is issued, STO is activated, and other circumstances.

| Code | Item | Description | Data |
|---|---|---|---|
| [C021]<br>[C022]<br>[C026] | Output terminal function | Inverter ready [IRDY]:<br>This signal is output when the inverter is ready to accept RUN commands. | 50 |

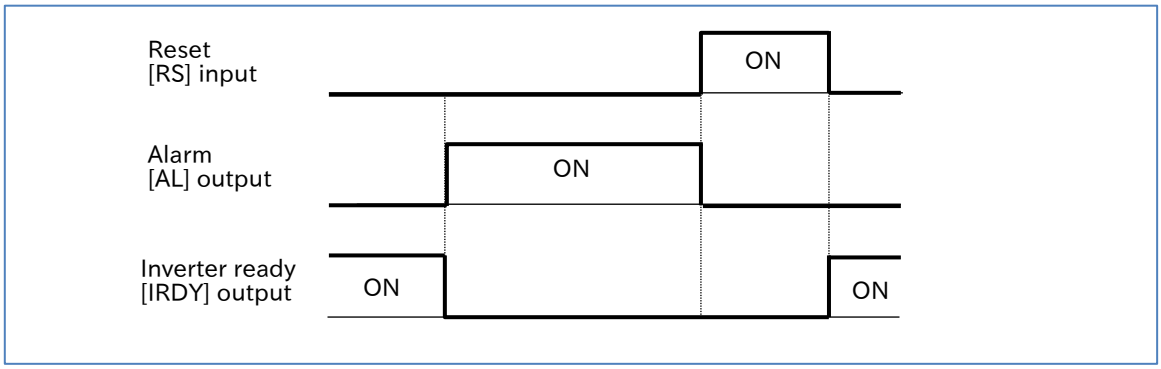

# 9.13 Outputting Signals According to the Output Frequency

## 9.13.1 Outputting a Signal When the Output Frequency Reaches the Target

Q

- How to detect and tell the system that the output frequency to the motor has accelerated to the command frequency?

A

- Assigning "Constant-frequency reached [FA1] (01)" to one of the output terminal functions ([C021]/[C022]/[C026]) enables the inverter to output command frequency arrival signal.
- When the output frequency reaches the frequency command ([F001], [A020], [A220], [A021] to [A035]), [FA1] is output.

!

- If the frequency command is an analog input, [FA1] may not be output stably. In this case, the on/off delay function of the output terminals may improve the situation. For details, refer to "9.16.2 Delaying and Holding Output Signals".

| Code | Item | Description | Data |
|---|---|---|---|
| [C021]<br>[C022]<br>[C026] | Output terminal function | Constant-frequency reached [FA1]:<br>This signal turns on when the output frequency reaches the command frequency. | 01 |

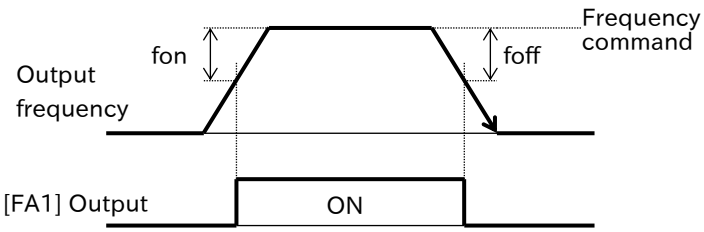


fon: 1% of the maximum frequency
foff: 2% of the maximum frequency

(Example of operation)
When the maximum frequency is 60 Hz, and the frequency command is 50 Hz
- fon = 60 × 0.01 = 0.6 Hz
- foff = 60 × 0.02 = 1.2 Hz
- During acceleration:
  On at 50 - 0.6 = 49.4 Hz
- During deceleration:
  Off at 50 - 1.2 = 48.8 Hz

## 9.13.2 Outputting a Signal When the Output Frequency Exceeds the Set Value

**Q**

- How to detect and tell the system that the output frequency to the motor has reached or exceeded the set value?

**A**

- Assigning "Set frequency overreached [FA2] (02)"/"Set frequency overreached 2 [FA4] (24)" to one of the output terminal functions ([C021]/[C022]/[C026]) enables the inverter to output command frequency arrival signals.
- Two independent set frequency overreached signals [FA2] and [FA4] can be assigned to the output terminals.

**!**

- The frequency setting for turning [FA2] on during acceleration and off during deceleration is set by "Arrival frequency during acceleration [C042]"/"Arrival frequency during deceleration [C043]", respectively. Similarly, set "Arrival frequency 2 during acceleration [C045]"/"Arrival frequency 2 during deceleration [C046]" for [FA4].

| Code | Item | Description | Data |
|---|---|---|---|
| [C042] | Arrival frequency during acceleration | During acceleration, [FA2] turns on when the output frequency exceeds this set value. | 0.00 to 590.00 (Hz) |
| [C043] | Arrival frequency during deceleration | During deceleration, [FA2] turns off when the output frequency falls below this set value. | 0.00 to 590.00 (Hz) |
| [C045] | Arrival frequency 2 during acceleration | During acceleration, [FA4] turns on when the output frequency exceeds this set value. | 0.00 to 590.00 (Hz) |
| [C046] | Arrival frequency 2 during deceleration | During deceleration, [FA4] turns off when the output frequency falls below this set value. | 0.00 to 590.00 (Hz) |
| [C021]<br>[C022]<br>[C026] | Output terminal function | Set frequency overreached [FA2]:<br>This signal turns on when the output frequency exceeds the [C042]/[C043] set values. | 02 |
| | | Set frequency overreached 2 [FA4]:<br>This signal turns on when the output frequency exceeds the [C045]/[C046] set values. | 24 |

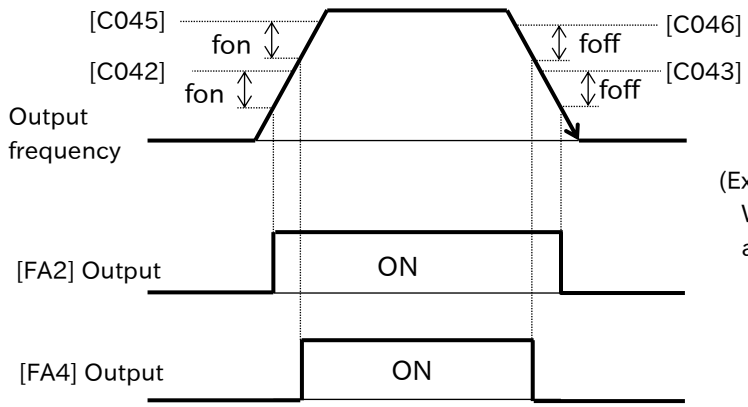


fon: 1% of the maximum frequency
foff: 2% of the maximum frequency

(Example of operation)
When the maximum frequency is 60 Hz, and [C042] = [C043] = 50 Hz
- fon = 60 × 0.01 = 0.6 Hz
- foff = 60 × 0.02 = 1.2 Hz
- During acceleration:
  On at 50 - 0.6 = 49.4 Hz
- During deceleration:
  Off at 50 - 1.2 = 48.8 Hz

## 9.13.3 Outputting a Signal When the Output Frequency Is Close to the Set Value

**Q**

- How to detect and tell the system that the output frequency to the motor is close to the set value?

**A**

- Assigning "Set frequency reached [FA3] (06)"/"Set frequency reached 2 [FA5] (25)" to one of the output terminal functions ([C021]/[C022]/[C026]) enables the inverter to output command frequency arrival signals.
- Two independent set frequency reached signals [FA3] and [FA5] can be assigned to the output terminals.

**!**

- The frequency setting for turning [FA3] on during acceleration and off during deceleration is set by "Arrival frequency during acceleration [C042]"/"Arrival frequency during deceleration [C043]", respectively. Similarly, set "Arrival frequency 2 during acceleration [C045]"/"Arrival frequency 2 during deceleration [C046]" for [FA5].

| Code | Item | Description | Data |
|---|---|---|---|
| [C042] | Arrival frequency during acceleration | During acceleration, [FA3] turns on when the output frequency reaches this set value. | 0.00 to 590.00 (Hz) |
| [C043] | Arrival frequency during deceleration | During deceleration, [FA3] turns on when the output frequency reaches this set value. | 0.00 to 590.00 (Hz) |
| [C045] | Arrival frequency 2 during acceleration | During acceleration, [FA5] turns on when the output frequency reaches this set value. | 0.00 to 590.00 (Hz) |
| [C046] | Arrival frequency 2 during deceleration | During deceleration, [FA5] turns on when the output frequency reaches this set value. | 0.00 to 590.00 (Hz) |
| [C021]<br>[C022]<br>[C026] | Output terminal function | Set frequency reached [FA3]:<br>This signal turns on/off when the output frequency reaches the [C042]/[C043] set values. | 06 |
| | | Set frequency reached 2 [FA5]:<br>This signal turns on/off when the output frequency reaches the [C045]/[C046] set values. | 25 |

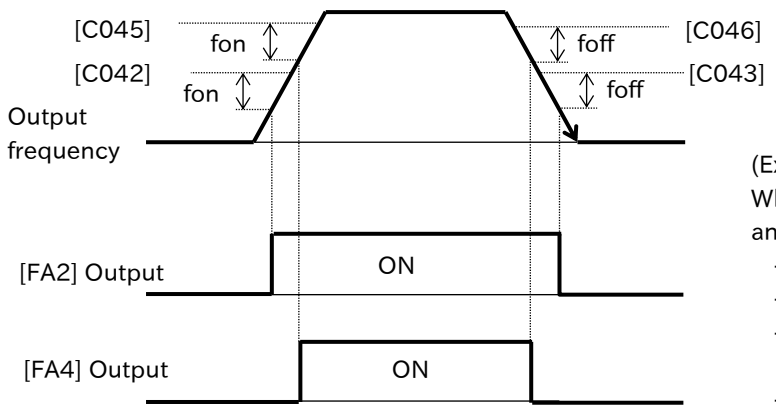


fon: 1% of the maximum frequency
foff: 2% of the maximum frequency

(Example of operation)
When the maximum frequency is 60 Hz, and [C042] = [C043] = 50 Hz
- fon = 60 × 0.01 = 0.6 Hz
- foff = 60 × 0.02 = 1.2 Hz
- During acceleration:
  On at 50 - 0.6 = 49.4 Hz
- During deceleration:
  Off at 50 - 1.2 = 48.8 Hz

## 9.13.4 Outputting a Signal When the Output Frequency is Close to 0 Hz

**Q**

- How to detect and tell the system that the output frequency to the motor is close to 0 Hz?

**A**

- Assigning "Zero speed detection [ZS] (21)" to one of the output terminal functions ([C021]/[C022]/[C026]) enables the inverter to output 0 Hz detection signal.
- When the output frequency of the inverter drops below the level set with "Zero speed detection level [C063]", [ZS] is output.

**!**

- During 0 Hz operation, such as when the inverter is stopped or during DC braking, [ZS] is on because the frequency is 0 Hz.
- When encoder feedback is used, this signal is output by determining the actual rotation speed of the motor.

| Code | Item | Description | Data |
|---|---|---|---|
| [C063] | Zero speed detection level | [ZS] turns on when the output frequency falls below this set value. | 0.00 to 100.00 (Hz) |
| [C021]<br>[C022]<br>[C026] | Output terminal function | Zero speed detection [ZS]:<br>The output frequency outputs the analog disconnection signal | 21 |

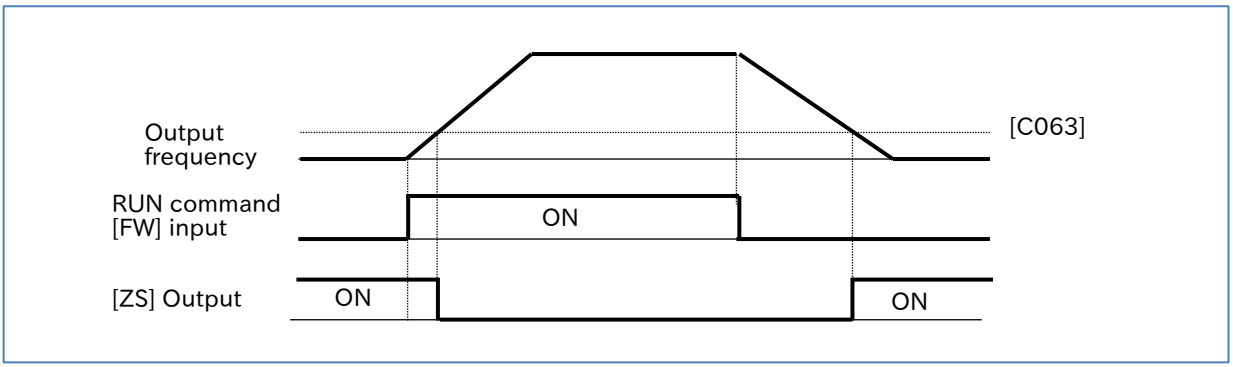

## 9.13.5 Outputting a Signal by Combining Two Output Signals

Q

- How to create my own output signals by combining output terminal functions?

A

- Since logical operations of output signals can be performed inside the inverter, various signals can be output by combining the operation of output terminal functions.
- There are three types of logical operators that can be selected: logical conjunction (AND), logical disjunction (OR), and exclusive disjunction (XOR).

!

- All output signals are covered. However, the logical operation results ([LOG1] to [LOG3]) cannot be used as the operation target.

| Code | Item | Description | Data |
|---|---|---|---|
| [C142]<br>[C145]<br>[C148] | LOG1 to LOG3 operand-1 selection | Selects logical operation target 1. | 00 to 62<br>(except 33 to 35, 63, no) |
| [C143]<br>[C146]<br>[C149] | LOG1 to LOG3 operand-2 selection | Selects logical operation target 2. | |
| [C144]<br>[C147]<br>[C150] | LOG1 to LOG3 logical calculation selection | The AND operation (logical conjunction) of target 1 and target 2 is output. | 00 |
| | | The OR operation (logical disjunction) of target 1 and target 2 is output. | 01 |
| | | The XOR operation (exclusive disjunction) of target 1 and target 2 is output. | 02 |
| [C021]<br>[C022]<br>[C026] | Output terminal function | Logic operation result 1 to 3 ([LOG1] to [LOG3]):<br>Performs logical operations on the output signals selected by logical operation target 1 and logical operation target 2, and outputs the results. | 33<br>34<br>35 |

## (Example 1) Logical conjunction (AND) operation example

- Set the "signal that turns on when the output current drops while the output frequency is above the set value" to [LOG1] and output it from the output terminal [11].

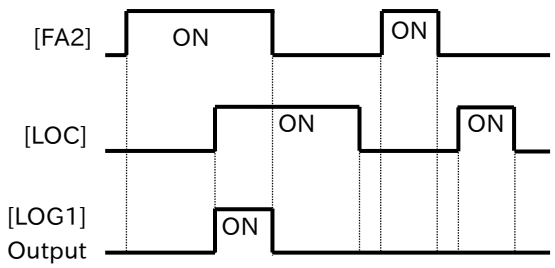


(Setting example)
- Output terminal [11] function [C021]
  = Logical operation result 1 [LOG1] (33)
- LOG1 operand-1 selection [C142]
  = Above set frequency [FA2] (02)
- LOG1 operand-2 selection [C143]
  = Low current signal [LOC] (43)
- LOG1 logical calculation selection [C144] = AND (00)

## (Example 2) Logical disjunction (OR) operation example

- Set the "signal that turns on when the output current is outside the range while either overload or electronic thermal overload state is occurring" to [LOG2] and output it from the output terminal [11].

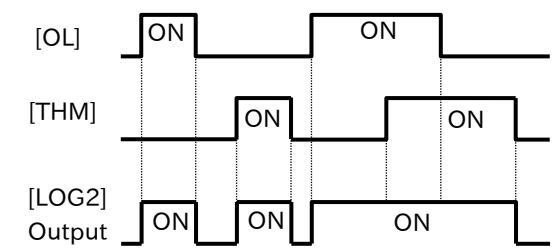


(Setting example)
- Output terminal [11] function [C021]
  = Logical operation result 2 [LOG2] (34)
- LOG2 operand-1 selection [C145]
  = Overload warning notice [OL] (03)
- LOG2 operand-2 selection [C146]
  = Electronic thermal alarm (Motor) [THM] (13)
- LOG2 logical calculation selection [C147] = OR (01)

## (Example 3) Exclusive disjunction (XOR) operation example

- Set the "signal when the output current is within the specified range" to [LOG3] and output it from the output terminal [12].

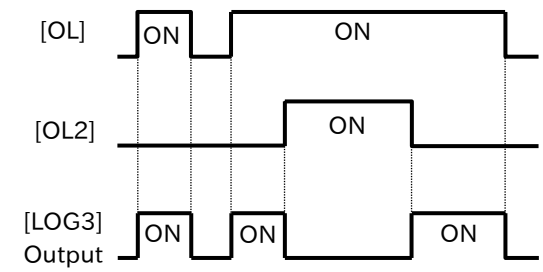


(Setting example)
- Output terminal [12] function [C022]
  = Logical operation result 3 [LOG3] (35)
- LOG3 operand-1 selection [C148]
  = Overload warning notice [OL] (03)
- LOG3 operand-2 selection [C149]
  = Overload warning notice 2 [OL2] (26)
- LOG3 logical calculation selection [C150] = XOR (02)

# 9.14 Performing Positioning Operation (Simple Position Control Function)

## 9.14.1 Overview of Simple Position Control Function and Basic Settings

Q
- How to perform the position control based on the origin like a servo?
- How to perform the positioning operation by moving to a position at a fixed distance with conveyors or carrier machines?

A
- The WJ-C1 is equipped with a simple position control function. It enables the simple positioning operation by feeding pulse signals from an external encoder, etc. back to the inverter. The main functions of the simple position control are as follows.
  - Multistage position control function (up to 8 target positions can be set, and the target position is selected by I/O input)
  - Turntable function (without rotation limit)
  - Positioning restart function
  - Homing (Homing function, Current position clear function, Current position preset function, Current position at power off save function)
  - Speed/position control switching function
  - Brake control interlock function
- For details on the positioning operation, refer to "Operation procedure for simple position control function" described in this section.
- The inverter starts with the current position cleared to zero when the power is turned on. In addition, if the motor rotates while the power is interrupted, the position cannot be counted at that time, which may cause position misalignment. Therefore, consider homing when power is turned on, or using the current position at power off save function. For details, refer to "9.14.2 Performing Homing Function during Positioning Operation".

!
- The simple position control function is available when using the first control mode. This function does not work when "2nd-motor control [SET]" is turned on. The "Permission of torque control [ATR]" function is also disabled.

| Code | Item | Description | Data |
|---|---|---|---|
| [d008] | Detect speed monitor | Monitors the feedback detection speed. | -590.00 to +590.00 (Hz) |
| [d029] | Position reference monitor | Monitors the current commanded position. | -268435455 to +268435455 (pls) |
| [d030] | Current position monitor | Monitors the current position. | |
| [A051] | DC braking selection | Set to "Disable (00)". In the simple position control function, the DC braking is automatically applied when the positioning is completed even if "Disable (00)" is selected. | 00 |
| [A054] | DC braking force | Set the DC braking force at the completion of positioning. | 0 to 100 (%) (ND mode)<br>0 to 70 (%) (LD mode) |
| [C102] | Reset mode selection | Set to "Only enable in trip status (Trip release at turn-ON, clear only trip memory)". | 03 |
| [C169] | Multistage input determination time | Time required to determine a position set-point when a multistage position set-point switching is performed. | 0 to 200 (× 10 ms) |
| [P003] | Pulse input, target function selection | Set to "Speed feedback (01)". | 01 |
| [P012] | Simple positioning selection | Set to "Simple positioning enabled (02)". | 02 |

| Code | Item | Description | Data |
|---|---|---|---|
| [P014] | Position displacement at creep speed | Sets the amount of movement at which it operates at the speed of [P015], with one motor rotation treated as 100%. | 0.0 to 400.0 (%) |
| [P015] | Creep speed | Sets the low-speed operation immediately before the positioning is completed. | Minimum frequency [b082] to 10.00 (s) |
| [P017] | Positioning completed range | When the current position falls within the target position ± [P017] range, positioning is considered completed, and [POK] is output. (Multiplier of 4) | 0 to 10000 (pls) |
| [P060] to [P067] | Position set-point 0 to Position set-point 7 | Sets position set-points 0 to 7. Positive values indicate the forward rotation, while negative values indicate the reverse rotation. | [P073] to [P072] |
| [P072] | Position control range (forward) | Sets the position limit on the forward rotation side when [P075] is "Limit (00)". | 0 to +268435455 |
| [P073] | Position control range (reverse) | Sets the position limit on the reverse rotation side when [P075] is "Limit (00)". | -268435455 to 0 |
| [P075] | Position control mode selection | Limit: The position control range ([P072], [P073]) can be specified. | 00 |
| | | No Limit: Turntable operation is enabled. | 01 |
| [P080] | Positioning restart range | After the positioning is completed, if the current position shifts outside the target position ± [P080] range, the positioning operation is performed again. (Multiplier of 4) | 0 to 10000 (pls) |
| [C001] to [C007] | Input terminal function | Multistage position settings selection 1 to 3 ([CP1]/[CP2]/[CP3]): Selects position set-points by combining ON/OFF for each input terminal function. | 66/67/68 |
| [C021] [C022] [C026] | Output terminal function | Positioning completed [POK]: When the current position falls within the target position ± [P017] range, this output is turned on. | 23 |

## Operation procedure for simple position control function

### 1 Pre-Setting of Parameters

(1) Perform wiring of the encoder and set related parameters. For details, refer to "9.5.8 Using Encoder Feedback".

(2) To enable the simple position control function, set "Pulse input, target function selection [P003]" to "Speed feedback (01)" and "Simple positioning selection [P012]" to "Simple positioning enabled (02)".

(3) To prevent the current position data from being cleared when a reset is input for trip release, etc., set "Reset mode selection [C102]" to "Only enable in trip status (Trip release at turn-ON, clear only trip memory) (03)".

(4) Set "DC braking selection [A051]" to "Disable (00)" (in the simple position control, even if [A051] is "Disable (00)", the DC braking operates automatically when the positioning is completed). Also, set "DC braking force [A054]" so that the required braking force is obtained when the positioning is completed.

(5) When "RUN command input source selection [A002]" is "Keypad (RUN-key) (02)", the DC braking does not work when stopped after the completion of positioning. To operate the DC braking when stopped after the completion of positioning, set [A002] to "Control terminal (01)", and assign either "Forward rotation [FW]" or "Reverse rotation [RV]" to the input terminal. The rotation method for the simple position control is the forward rotation if (target position - current position) is a positive value, and the reverse rotation if (target position - current position) is a negative value. Therefore, the "Forward rotation [FW]" input and the "Reverse rotation [RV]" input have no meaning in terms of rotation direction, but they work only as an input signal for starting or stopping operation.

(6) Set "Position displacement at creep speed [P014]" and "Creep speed [P015]" according to the operation pattern. Set the creep speed movement amount, with one motor rotation treated as 100%.
Also, set "Lower frequency limit, 1st-motor [A062]" to zero. If it is not set to zero, the value specified will be the lower limit of [P015].

(7) Set a pulse multiplier of 4 (the number of pulses for phase A single pulse cycle multiplied by four) for "Positioning completed range [P017]". When the current position falls within the target position ± [P017] range, the "Positioning completed [POK] (23)" output is turned on. Assign [POK] to the output terminal as needed.

(8) Set the target position, speed command (frequency command), acceleration time, and deceleration time for the positioning operation. Set the target position to "Position set-point 0 [P060]" to "Position set-point 7 [P067]", and select a value by combining the position set-point selections 1 to 3 ([CP1] to [CP3]) of the input terminal function. The speed command (frequency command) and the acceleration/deceleration time are specified according to the frequency command and the acceleration/deceleration time setting from each command selection source at the time of RUN command input.

(9) If "Position control mode selection [P075]" is set to "Limit (00)", the specified position control range is enabled. Set the position control range to "Position control range (forward) [P072]" and "Position control range (reverse) [P073]". If the current position goes outside the specified position control range, the inverter trips due to the "Position control range error [E83]". If [P075] is set to "No Limit (01)", the specified position control range is disabled and the turntable operation function is enabled. For details, refer to "Turntable Operation Function" in this section.

## 2 Positioning Operation

- The positioning operation when the RUN command is turned on is shown in the figure below.

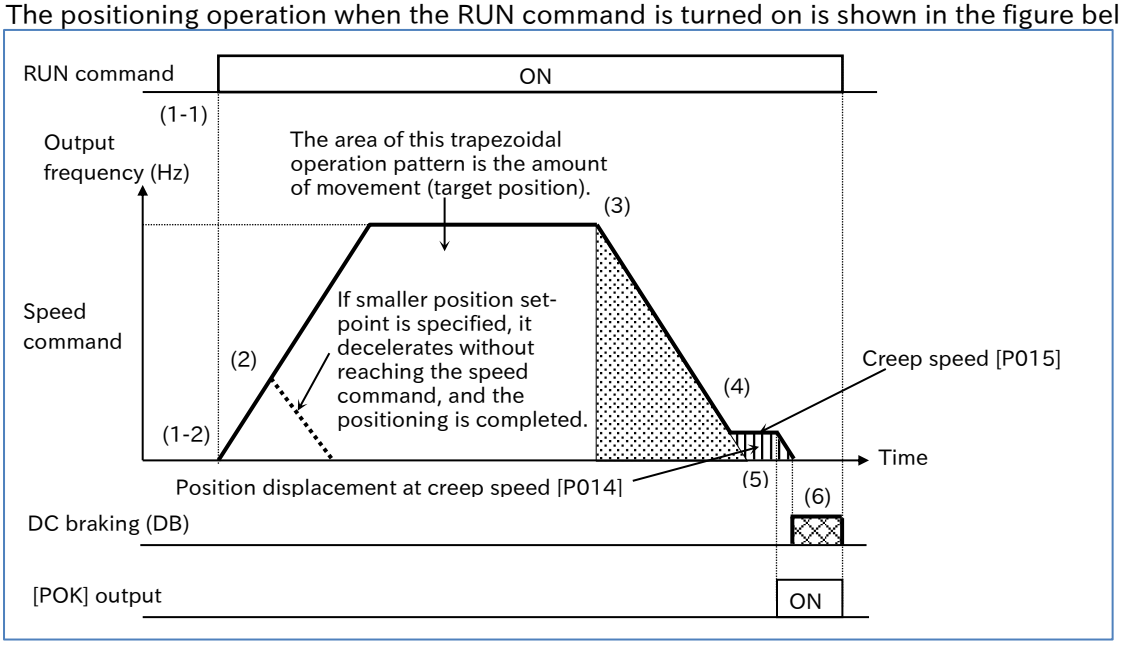


(1) When an RUN command is specified (1-1), the positioning operation starts automatically (1-2), following the trapezoidal operation pattern shown above, according to the position set-point, speed command (frequency command), acceleration time, and deceleration time selected from each respective command source at that time. The rotation direction is forward rotation if (target position - current position) is positive, and reverse rotation if (target position - current position) is negative.

(2) The operation accelerates according to the acceleration time until it reaches the speed command (frequency command). If the amount of movement to the target position is small, it decelerates before reaching the speed command (dashed line in the figure).
If the amount of movement is smaller than "Position displacement at creep speed [P014]", it moves to the target position at the "Creep speed [P015]", and if the amount of movement is within "Positioning completed range [P017]", the DC braking is activated on the spot.

(3) Deceleration starts before the target position (before "the amount of movement during deceleration" + "Position displacement at creep speed [P014]").

(4) The operation decelerates and when the output frequency reaches "Creep speed [P015]", operates at that speed.
If the motor rotation becomes unstable at the low speed, increase [P015].

(5) When the current position reaches within [the target position ± "Positioning completed range [P017]"], the "Positioning completed [POK]" output is turned on, and it decelerates and stops.

(6) The DC braking activates after stopping. When the RUN command is turned off, the DC braking is released.
Since the DC braking after stopping is not controlled to maintain the position, the stop position may shift if an external force is applied. Use an external brake if the position needs to be maintained.

- For the single-phase pulse input ([P004]=00), the position is not counted if the motor is rotated at the stopped state without RUN command input. To prevent the position from shifting during stop, use a brake or other means to prevent the motor shaft from rotating during stop, or change to the phase AB 90° phase difference pulse so that position counting is performed even during stop.
- For the single-phase pulse input ([P004]=00), if the rotation direction command is switched during operation, an error may occur in the position count due to the time difference between the switching of the inverter's output frequency direction and the switching of the actual motor rotation direction. Controlling the position at the single-phase pulse input, be sure to completely stop the operation, and then change the rotation direction.

## A Multistage position set-point switching function

- The multistage position set-point switching function allows position set-points to be selected from "Position set-point 0 [P060]" to "Position set-point 7 [P067]" by combining "Multistage position settings selection 1 [CP1] (66)" to "Multistage position settings selection 3 [CP3] (68)" of the input terminal function.
- Position set-points 0 to 7 are set with absolute positions based on the origin.
- If [CP1] to [CP3] are not assigned to the input terminal, "Position set-point 0 [P060]" is used as the position set-point.

!

- When inputting position set-point selections 1 to 3, the time until the input terminal status (position set-point selection) is determined can be adjusted with "Multistage input determination time [C169]". Erroneous selection due to time difference of inputs between position set-point selections 1 to 3 can be prevented. The selected data is determined after the time set for [C169] elapses with no change in input.
  Note that increasing the determination time will result in poor input response.

| Code | Item | Description | Data |
|---|---|---|---|
| [C169] | Multistage input determination time | This is the time required to determine a position set-point when a multistage position set-point switching is performed. | 0 to 200 (× 10 ms) |
| [P060] to [P067] | Position set-point 0 to Position set-point 7 | Sets position set-points 0 to 7. Positive values indicate the forward rotation, while negative values indicate the reverse rotation. (The setting range is limited to "Position control range (reverse) [P073]" to "Position control range (forward) [P072]".) | [P073] to [P072] |
| [C001] to [C007] | Input terminal function | Multistage position settings selection 1 to 3 ([CP1]/[CP2]/[CP3]): Selects position set-points by combining ON/OFF for each input terminal function. | 66/67/68 |

| Position set-point | CP3 | CP2 | CP1 |
|---|---|---|---|
| Position set-point 0 | OFF | OFF | OFF |
| Position set-point 1 | OFF | OFF | ON |
| Position set-point 2 | OFF | ON | OFF |
| Position set-point 3 | OFF | ON | ON |
| Position set-point 4 | ON | OFF | OFF |
| Position set-point 5 | ON | OFF | ON |
| Position set-point 6 | ON | ON | OFF |
| Position set-point 7 | ON | ON | ON |

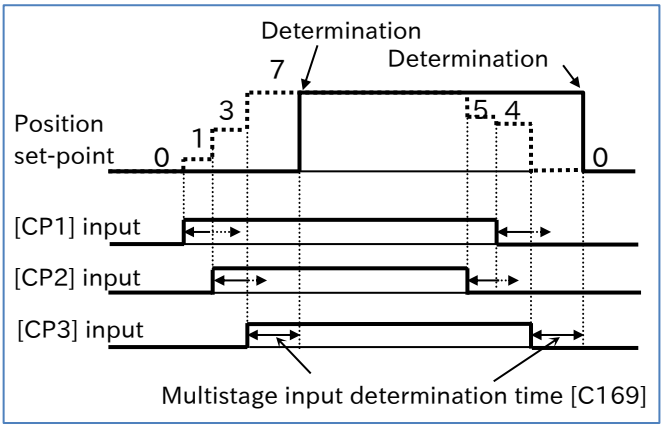

## A Turntable operation function

- When "No limit (01)" is selected for "Position control mode selection [P075]", the rotation direction is determined so as to take the shortest movement distance from the current position to the target position, for usage such as the turntable shown in the figure below.
- Set the amount of movement for one rotation of the rotation coordinates to "Position set-point 0 [P060]", and set the target position of actual operation to "Position set-points 1 to 7 ([P061] to [P067])".

!

- This function is enabled when the "Pulse input mode selection [P004]" is "Single phase pulse input (00)" or "90 degrees shift pulse (01)". Do not use this function when "Forward and reverse command and pulse (03)" is specified.
- If [P075] is set to "No limit (01)", the homing function, and the speed/position switching function cannot be used.

| Code | Item | Description | Data |
|---|---|---|---|
| [P075] | Position control mode selection | No limit: Turntable operation is enabled. | 01 |
| [P060] | Position set-point 0 | Sets the amount of movement for one rotation with a positive value.<br>This is not a target position for the positioning operation. | 0 to 268435455 |
| [P061] to [P067] | Position set-point 1 to Position set-point 7 | Sets a target position for the positioning operation. Set to a positive value that is smaller than [P060]. | 0 to [P060] - 1 |
| [C001] to [C007] | Input terminal function | Multistage position settings selection 1 to 3 ([CP1], [CP2], [CP3]):<br>Selects position set-points by combining ON/OFF for each input terminal function. | 66/67/68 |

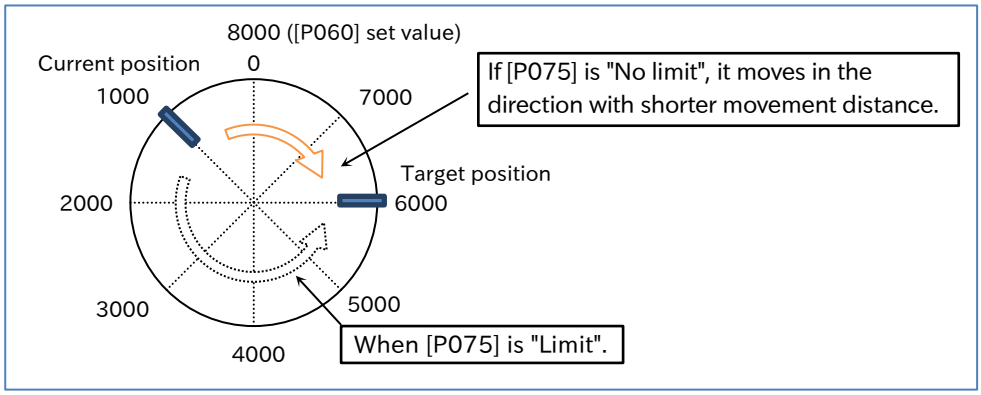

## A Positioning restart function

- This function automatically performs the positioning operation again if the position shifts due to the motor being rotated by an external force, etc. during the DC braking after the completion of positioning in the position control operation.
- This function activates when the current position shifts outside the target position ± "Positioning restart range [P080]".
- When [P080] is set to a value other than zero, this function is enabled. If [P080] is zero, it is not enabled.
- If the RUN command is turned off after the positioning is completed, this function is disabled.
- In the same manner as [P017], set [P080] to a pulse multiplier of 4 (the number of pulses for phase A single pulse cycle multiplied by four).

!

- Depending on the settings of "Positioning restart range [P080]" and "Positioning completed range [P017]", the positioning restart function may start and stop repeatedly. Set and adjust the values to be [P080] > [P017] so that starting and stopping do not occur frequently.
- Do not use this function if a brake is used to maintain the stop position. Frequent brake opening and closing may occur, resulting in load drop and overload trip.

| Code | Item | Description | Data |
|---|---|---|---|
| [P017] | Positioning completed range | When the current position falls within the target position ± [P017] range, positioning is considered completed, and [POK] is output. (Multiplier of 4) | 0 to 10000 (pls) |
| [P080] | Positioning restart range | After the positioning is completed, if the current position shifts outside the target position ± [P080] range, the positioning operation is performed again. (Multiplier of 4) | 0 to 10000 (pls) |

## 9.14.2 Performing Homing Function during Positioning Operation

Q

- How to perform homing before the positioning operation?
- How to make the current position as the origin position by clearing to zero or setting to any value?
- How to store the current position at power off and use the same stored position at power on?

A

- The inverter starts with the current position data cleared to zero when power is turned on. Therefore, homing is required for the simple position control.
- Two types of homing operations can be selected from "Homing mode selection [P068]".
- When using the homing function, assign "Limit signal of homing function [ORL] (69)" and "Start signal of homing function [ORG] (70)" to the input terminal. Input an origin signal from a limit sensor, etc. to [ORL].
- Select the rotation direction for homing from "Homing direction selection [P069]". When the homing is completed, the current position is cleared to zero.
- Along with the homing function, you can also use the current position clear function, the current position preset function, and the current position at power off save function described below, depending on the application.

!

- When using the homing function, set "Position control mode selection [P075]" to "Limit (00)". When "No limit (01)" is selected, it is not enabled.

| Code | Item | Description | Data |
|---|---|---|---|
| [d030] | Current position monitor | This monitor value is cleared to zero when the power is interrupted and the homing is completed. It is also possible to change to any value using the current position preset function (described below) and to save the current position in the internal memory using the current position at power off save function. | -268435455 to +268435455 (pls) |
| [P068] | Homing mode selection | Low-speed homing mode | 00 |
| | | High-speed homing mode | 01 |
| [P069] | Homing direction selection | The direction of homing is the forward rotation. | 00 |
| | | The direction of homing is the reverse rotation. | 01 |
| [P070] | Low-speed homing speed | Sets the speed of the low-speed homing mode. | 0.00 to 10.00 (Hz) |
| [P071] | High-speed homing speed | Sets the speed of the high-speed homing mode. | 0.00 to Maximum frequency, 1st-motor (Hz) |
| [P075] | Position control mode selection | When using the homing function, set to "Limit (00)". | 00 |
| [C001] to [C007] | Input terminal function | Limit signal of homing function [ORL]: Input signal from an origin limit switch, etc. in the homing operation. | 69 |
| | | Start signal of homing function [ORG]: Turning on this signal during simple position control starts the homing operation. | 70 |

## Low-speed homing mode (P068=00)

- The following figure illustrates the operation when "Homing mode selection [P068]" is "Low-speed homing (00)".

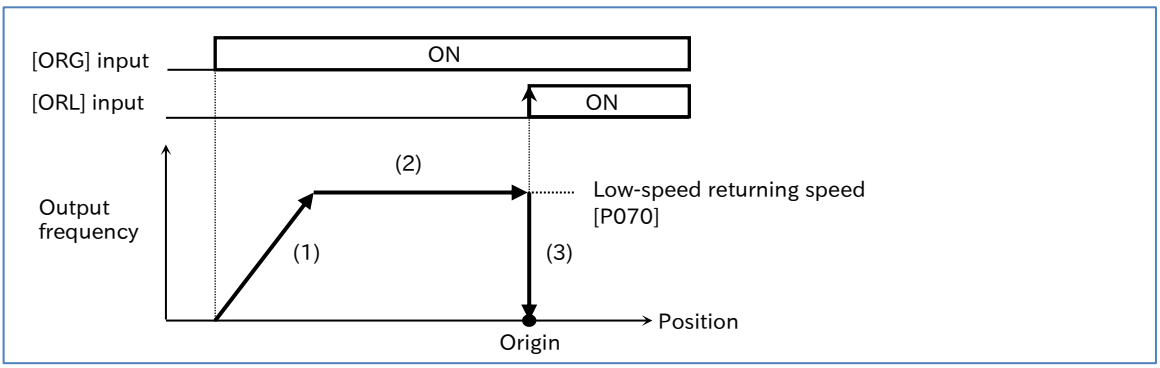


(1) When the "Start signal of Homing function [ORG] (70)" input is turned on, it accelerates in the direction of "Homing direction selection [P069]". At this time, the simple position control starts, so do not enter any RUN command.

(2) It operates at "Low-speed homing speed [P070]".

(3) At the point when "Limit signal of homing function [ORL] (69)" is turned on, "Current position monitor [d030]" is cleared to zero and the DC braking is activated at the same time. Turning [ORG] off releases the DC braking.

## High-speed homing mode (P068=01)

- The following figure illustrates the operation when "Homing mode selection [P068]" is "High-speed homing (01)".

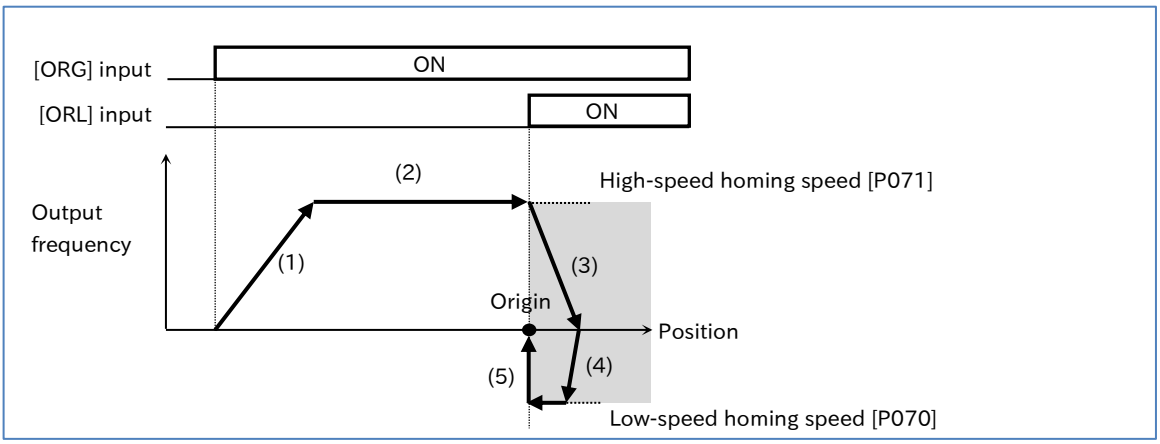


(1) When the "Start signal of homing function [ORG] (70)" input is turned on, it accelerates in the direction of "Homing direction selection [P069]". At this time, the simple position control starts, so do not enter any RUN command.

(2) It operates at "High-speed homing speed [P071]".

(3) When "Limit signal of homing function [ORL] (69)" is turned on, the deceleration starts.

(4) It accelerates in the opposite direction of "Homing direction selection [P069]" and operates at "Low-speed homing speed [P070]".

(5) At the point when "Limit signal of Homing function [ORL] (69)" is turned on, "Current position monitor [d030]" is cleared to zero and the DC braking is activated at the same time. Turning [ORG] off releases the DC braking.

## A Origin setting using the current position clear function

- Assigning "Clearance of position deviation [PCLR] (47)" to the input terminal and turning on that terminal clears "Current position monitor [d030]" to zero.
- Moving to the position that will be the origin beforehand and turning on [PCLR] determines the origin.

!

- [PCLR] is enabled when "Pulse input, target function selection [P003]" is set to "Speed feedback (01)" regardless of the setting of "Simple positioning selection [P012]".

| Code | Item | Description | Data |
|---|---|---|---|
| [C001] to [C007] | Input terminal function | Clearance of position deviation [PCLR]:<br>When "Pulse input, target function selection [P003]" is "Speed feedback (01)", turning this signal on clears "Current position monitor [d030]" to zero. | 47 |

## A Origin setting using the current position preset function

- The current position preset function specifies the current position to the position set in "Pre-set position data [P083]". This is used when there is an offset between the origin position ([ORL] signal input position) and the actual origin when the returning function is used.
- Assigning "Position data presetting [PSET] (91)" to the input terminal and turning on that terminal allows "Current position monitor [d030]" to be "Pre-set position data [P083]".

!

- When using the current position preset function, set "Position control mode selection [P075]" to "Limit (00)". When "No Limit (01)" is selected, please set [P083] in the range of 0 to ([P060]-1).
- [PSET] is enabled when "Pulse input, target function selection [P003]" is set to "Speed feedback (01)" regardless of the setting of "Simple positioning selection [P012]".

| Code | Item | Description | Data |
|---|---|---|---|
| [P075] | Position control mode selection | When using the current position preset function, select "Limit (00)". | 00 |
| [P083] | Pre-set position data | Sets the preset value of the position data.<br>(The setting range is limited to "Position control range (reverse) [P073]" to "Position control range (forward) [P072]".) | [P073] to [P072] |
| [C001] to [C007] | Input terminal function | Position data presetting [PSET]:<br>When "Pulse input, target function selection [P003]" is "Speed feedback (01)", if this signal is turned on, "Current position monitor [d030]" becomes the value of " Pre-set position data [P083]". | 91 |

## Current position at power off save function

- When "Save current position at power off [P081]" is set to "Enable (01)", the value of "Current position monitor [d030]" is stored in the inverter memory when the power is interrupted, and the stored value is used as the current position when the power is on again.

- If the motor rotates while the power is interrupted, the position is not counted at that time, resulting in position misalignment. Therefore, when activating this function, use a brake or other means to prevent the motor from rotating when the power is interrupted.
- Even when the motor movement is restrained by a brake when the power is interrupted, the position misalignment may accumulate due to the rotating shaft backlash, etc. Therefore, check the operation of the application, and eliminate the position misalignment by using the power return function or other means if necessary.

| Code | Item | Description | Data |
|---|---|---|---|
| [P081] | Save current position at power off | Disable: Does not save the position data when the power is interrupted. | 00 |
| | | Enable: Stores the current position when the power is interrupted, and uses the stored position as the current position when the power is on again. | 01 |
| [P082] | Current position at power off | This is the storage parameter for saving the position data when the power is interrupted.<br>(The setting range is limited to "Position control range (reverse) [P073]" to "Position control range (forward) [P072]".) | [P073]<br>to<br>[P072] |

## 9.14.3 Operating by Switching between Speed Control and Position Control

**Q** How to switch to the position control during the operation in the speed control and perform the positioning stop?

**A**

- In the simple position control mode, normal frequency operation (speed control operation) is performed when "Speed/position switching [SPD] (73)" of the input terminal function is turned on. The rotation direction follows the direction command for the RUN command.
- While the [SPD] input is on, the current position counter is zero. When the [SPD] input is turned off during the operation, the operation is switched to the position control operation from that point.
- If the position command is zero when switching from speed control to position control, it goes into stop operation at that point.

**!**

- When using the speed/position switching function, set "Position control mode selection [P075]" to "Limit (00)". When "No Limit (01)" is selected, it is not enabled.
- While the [SPD] input is on, it moves in the direction depending on the RUN command. When switching from the speed control to the position control, pay attention to a positive or negative sign of the RUN command.

| Code | Item | Description | Data |
|---|---|---|---|
| [P075] | Position control mode selection | When using the speed/position switching function, select "Limit (00)". | 00 |
| [C001] to [C007] | Input terminal function | Speed/position switching [SPD]:<br>The operation is performed in the speed control when this signal is turned on, and it switches to the position control when the signal is turned off. | 73 |

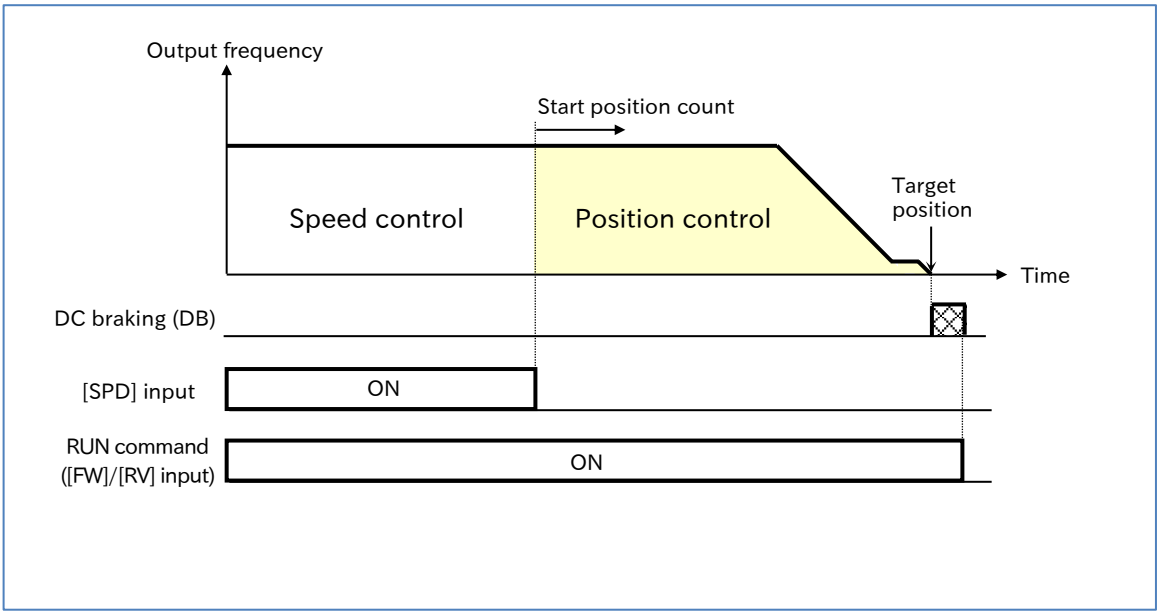

## 9.14.4 Operating Simple Position Control with Brake Control

**Q**

- How to link an external brake with the system to operate when the positioning operation is completed?
- How to apply a brake to prevent position misalignment after moving the work piece by the position control?

**A**

- In the simple position control mode, the simple position control is automatically linked with the brake control when "Brake control enable [b120]" is "Enable (DC braking enabled at stop when position control is enabled) (01)" or "Enable (DC braking disabled at stop when position control is enabled) (02)".
- When using this function, assign "Brake release [BRK] (19)" to the output terminal.
- When operating this function while interlocking by inputting an engagement/release check signal from an external brake to the inverter, assign "Answer back from brake [BOK] (44)" to the input terminal and set "Brake confirmation signal wait time [b124]". If necessary, assign "Brake error [BER] (20)" to the output terminal.
- Refer to "9.7.10 Starting and Stopping with External Brake Control" and "9.14.1 Overview of Simple Position Control Function and Basic Settings" respectively, and make appropriate settings accordingly.

**!**

- During deceleration, when the "Creep speed [P015]" is reached, the brake is engaged to turn off the "Brake release [BRK] (19)" and the motor stops. Therefore, it stops before the actual target position (before the point of "Position displacement at creep speed [P014]" at maximum stopping distance). Set "Position displacement at creep speed [P014]" and "Positioning completed range [P017]" considering the accuracy of the stop position.

| Code | Item | Description | Data |
|---|---|---|---|
| [b120] | Brake control enable | Enabled (DC braking enabled at stop when position control is enabled) | 01 |
| | | Enabled (DC braking disabled at stop when position control is enabled) | 02 |
| [b121] | Brake release wait time | Sets the time required for the output current to reach the brake release current after the brake release frequency is reached. | 0.00 to 5.00 (s) |
| [b122] | Brake wait time for accel. | Sets the mechanical delay time from the brake confirmation signal (or the brake release signal) is received until the brake is released. | 0.00 to 5.00 (s) |
| [b123] | Brake wait time for stopping | Sets the mechanical delay time from the brake release signal is turned off until the brake is engaged. | 0.00 to 5.00 (s) |
| [b124] | Brake confirmation signal wait time | Set the time or longer from the brake release signal is output until the release completion signal output from the brake is received by the inverter. | 0.00 to 5.00 (s) |
| [b126] | Brake release current | Sets the output current at which the brake release is permitted. Note that a lower value may not produce sufficient torque when the brake is released. | (0.0 to 2.0) × Rated current (A) |
| [P012] | Simple positioning selection | Sets to enable the simple position control. | 02 |
| [P014] | Position displacement at creep speed | Sets the amount of movement at which it operates at the speed of [P015], with one motor rotation treated as 100%. | 0.0 to 400.0 (%) |
| [P015] | Creep speed | Sets the low-speed operation immediately before the positioning is completed. | Minimum frequency [b082] to 10.00 (s) |
| [P017] | Positioning completed range | When the current position falls within the target position ± [P017] range, positioning is considered completed, and [POK] is output. (Multiplier of 4) | 0 to 10000 (pls) |
| [C001] to [C007] | Input terminal function | Answer back from Brake [BOK]:<br>This checks the input signal using the answer returned for the [BRK] output signal to the external brake. | 44 |
| [C021] [C022] [C026] | Output terminal function | Brake release [BRK]:<br>It is the signal for an external brake engagement/release. | 19 |
| | | Brake error [BER]:<br>Turns on in the event of a sequence error for the brake control function. When this signal is turned on, the inverter trips with the "Brake error [E36]". | 20 |

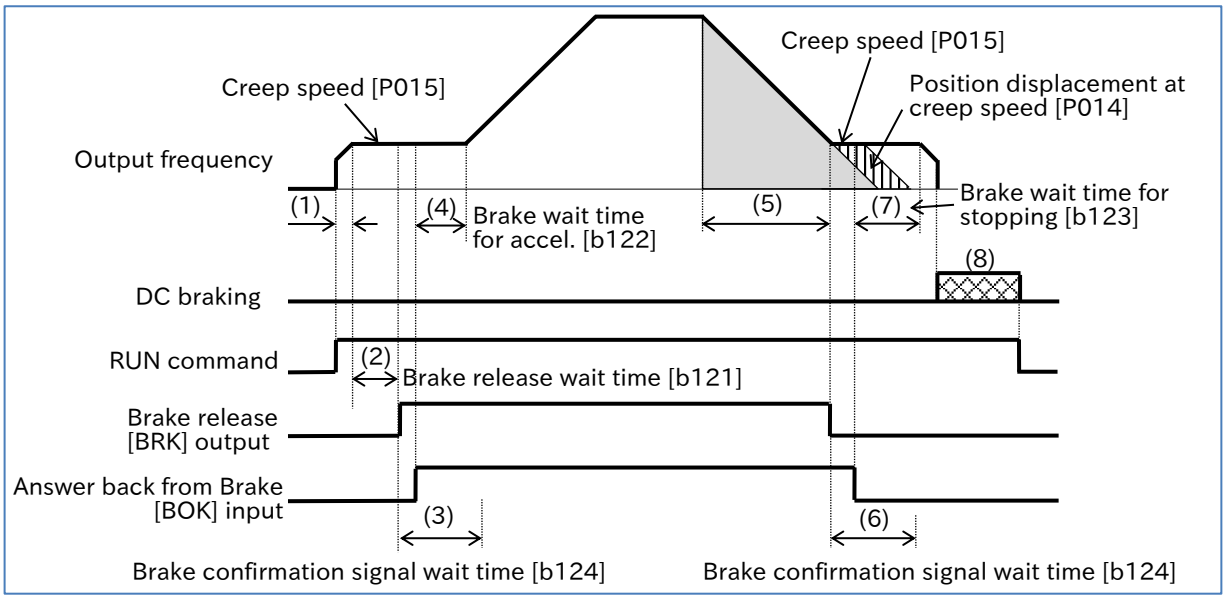


(1) When the RUN command is received, the inverter accelerates to the "Creep speed [P015]".
The rotation direction is forward rotation if (current position - target position) is positive, and reverse rotation if (current position - target position) is negative.
If the target position is within ± "Positioning completed range [P017]", it stops on the spot without releasing the brake. Whether the DC braking is performed depends on the setting of [b120].

(2) After the output frequency reaches "Creep speed [P015]" and after "Brake release wait time [b121]" has elapsed, "Brake release [BRK] (19)" is turned on.
However, if the output current at this time is less than "Brake release current [b126]", [BRK] is not turned on, and instead, the "Brake error [E36]" trip occurs and "Brake error [BER] (20)" is turned on.

(3) Operation differs depending on whether or not "Answer back from brake [BOK] (44)" is assigned to the input terminal.

With [BOK] assignment: After [BRK] is turned on, the inverter waits for [BOK] to be turned on during the "Brake confirmation signal wait time [b124]" without accelerating. If [BOK] is not turned on within the wait time, the "Brake error [E36]" trip occurs and "Brake error [BER] (20)" is turned on.

Without [BOK] assignment: After [BRK] is turned on, move to step (4).

(4) After the [BOK] input is turned on (or after the [BRK] output is turned on), when "Brake wait time for accel. [b122]" has elapsed, it accelerates to the set frequency again. If the amount of movement to the target position is small, deceleration starts before reaching to the set frequency.

(5) Deceleration starts before the target position (before "the amount of movement during deceleration" + "Position displacement at creep speed [P014]"). The inverter decelerates to "Creep speed [P015]" and [BRK] is turned off.

(6) Operation differs depending on whether or not "Answer back from brake [BOK] (44)" is assigned to the input terminal.

With [BOK] assignment: After [BRK] is turned off, the inverter waits for [BOK] to be turned off during "Brake confirmation signal wait time [b124]" without decelerating. If [BOK] is not turned off within the wait time, the "Brake error [E36]" trip occurs and "Brake error [BER]" is turned on.

Without [BOK] assignment: After [BRK] is turned off, move to step (7).

(7) After the [BOK] input is turned off (or the [BRK] output is turned off), it decelerates to 0 Hz again after "Brake wait time for stopping [b123]" or the moving time of "Position displacement at creep speed [P014]", whichever is longer.

(8) After stopping, the inverter follows the setting of "Brake control enable [b120]". When "Enable (DC braking enabled at stop when position control is enabled) (01)" is selected, the DC braking is activated, and the output is shut off when the RUN command is turned off. When "Enable (DC braking disabled at stop when position control is enabled) (02)" is selected, the output is shut off.

# 9.15 Functions with External Signal Input

## 9.15.1 Using External I/O Input Signal Functions

Q

- How to assign each function to the input terminals of the inverter to operate with I/O signal input?
- How to switch a/b (NO/NC) contact for the input terminals?

A

- The input terminal [1] to [7] are intelligent input terminals. By assigning the functions in the list of input terminal functions shown on the next page to [C001] to [C007], the functions specified in the input terminals [1] to [7] is assigned. For details of each function, refer to the chapter shown in the "Page" column of the list of input terminal functions.
- The input terminals [1] to [7] can be individually selected as contact a (NO) input or contact b (NC) input by setting [C011] to [C017].
- For details of the electrical specifications of the input terminals [1] to [7], refer to "5.4 Control Circuit Terminal".

!

- The same function cannot be assigned to multiple input terminals. When assigning the same function to multiple terminals, the last terminal assigned becomes enabled, and the assignment before that terminal becomes "No assignment [no] (no)".
- Some functions may be assignable only to specific terminals. For details, refer to the pages describing each function.

| Code | Item | Description | Data |
|---|---|---|---|
| [C001] to [C007] | Input terminal function | Assigns input terminal functions to input terminals [1] to [7].<br>The settings of [C001] to [C007] correspond to the input terminals [1] to [7], respectively. | Refer to the list of input terminal functions in this section. |
| [C011] to [C017] | Input terminal active state | Operates as "a" contact (NO). | 00 |
| | | Operates as "b" contact (NC). | 01 |

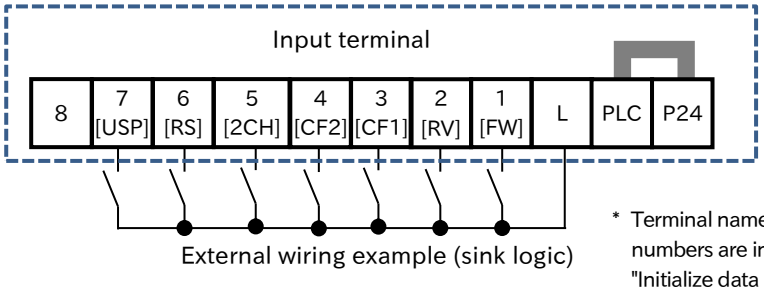


* Terminal names such as [FW] under the terminal numbers are initial assigned functions when "Initialize data selection [b085]" set to "Pattern 0 (00)". For details of initial setting when [b085] is set to other value, refer to "18.2.5 C Parameter Group".

## ■ List of input terminal functions

| Data | Symbol | Function name | Page |
|---|---|---|---|
| 00 | FW | Forward rotation | 9-1-3 |
| 01 | RV | Reverse rotation | |
| 02 | CF1 | Multi-speed selection 1 | 9-2-7 |
| 03 | CF2 | Multi-speed selection 2 | |
| 04 | CF3 | Multi-speed selection 3 | |
| 05 | CF4 | Multi-speed selection 4 | |
| 06 | JG | Jogging | 9-2-10 |
| 07 | DB | External DC braking | 9-7-11 |
| 08 | SET | 2nd-motor control | 9-7-18 |
| 09 | 2CH | 2-stage Acceleration/ Deceleration | 9-3-3 |
| 11 | FRS | Free run stop | 9-7-9<br>9-7-10 |
| 12 | EXT | External fault | 9-10-3 |
| 13 | USP | Unattended start protection | 9-10-4 |
| 14 | CS | Commercial power supply change | 9-7-15 |
| 15 | SFT | Soft-Lock | 7-2-5 |
| 16 | AT | Analog input switching | 9-2-4 |
| 18 | RS | Reset | 9-1-9<br>9-7-8 |
| 19 | PTC | External thermistor (Can be assigned only to [C005].) | 5-4-4<br>9-10-7 |
| 20 | STA | 3-wire Start | 9-1-4 |
| 21 | STP | 3-wire Stop | |
| 22 | F/R | 3-wire Forward/Reverse | |
| 23 | PID | Disable PID | 9-8-2 |
| 24 | PIDC | PID integration reset | |
| 27 | FUP | Remote control Speed-UP function | 9-2-18 |
| 28 | FDN | Remote control Speed-DOWN function | |
| 29 | UDC | Remote control Speed data clearing | |
| 31 | F-OP | Force operation | 9-1-7<br>9-2-21 |
| 32 | SF1 | Multi-speed Bit-1 | 9-2-7 |
| 33 | SF2 | Multi-speed Bit-2 | |
| 34 | SF3 | Multi-speed Bit-3 | |
| 35 | SF4 | Multi-speed Bit-4 | |
| 36 | SF5 | Multi-speed Bit-5 | |
| 37 | SF6 | Multi-speed Bit-6 | |
| 38 | SF7 | Multi-speed Bit-7 | |
| 39 | OLR | Overload restriction selection | 9-9-2 |

| Data | Symbol | Function name | Page |
|---|---|---|---|
| 40 | TL | Torque limit enable | 9-6-2 |
| 41 | TRQ1 | Torque limit selection bit 1 | |
| 42 | TRQ2 | Torque limit selection bit 2 | |
| 44 | BOK | Answer back from brake | 9-7-16 |
| 46 | LAC | Acceleration/Deceleration cancellation | 9-3-7 |
| 47 | PCLR | Clearance of position deviation | 9-14-10 |
| 50 | ADD | Trigger for frequency addition | 9-2-17 |
| 51 | F-TM | Force terminal | 9-1-7<br>9-2-21 |
| 52 | ATR | Permission of torque control | 9-6-5 |
| 53 | KHC | Accumulated input power monitor clear | 10-1-7 |
| 56 | MI1 | General-purpose input 1 | 12-2-3 |
| 57 | MI2 | General-purpose input 2 | |
| 58 | MI3 | General-purpose input 3 | |
| 59 | MI4 | General-purpose input 4 | |
| 60 | MI5 | General-purpose input 5 | |
| 61 | MI6 | General-purpose input 6 | |
| 62 | MI7 | General-purpose input 7 | |
| 65 | AHD | Analog command holding | 9-2-20 |
| 66 | CP1 | Multistage position settings selection 1 | 9-14-2<br>9-14-5 |
| 67 | CP2 | Multistage position settings selection 2 | |
| 68 | CP3 | Multistage position settings selection 3 | |
| 69 | ORL | Limit signal of homing function | 9-14-8 |
| 70 | ORG | Start signal of homing function | |
| 73 | SPD | Speed/position switching | 9-14-12 |
| 81 | ECOM | EzCOM activation | 11-4-2 |
| 82 | PRG | Program RUN | 12-2-2 |
| 83 | HLD | Acceleration/deceleration disable | 9-3-4 |
| 84 | REN | RUN enable | 9-4-4 |
| 85 | PLB | Pulse input B (Can be assigned only to [C007].) | 9-5-14 |
| 86 | DISP | Display lock | 7-2-10 |
| 91 | PSET | Position data presetting | 9-14-10 |
| no | no | No assignment | - |

## 9.15.2 Adjusting I/O Input Signal Response

**Q**

- How to slow down the I/O input signal response?
- How to suppress I/O input signal chattering?
- Noise is introduced to the I/O input signal. How to set up the system to avoid noise?

**A**

- Setting a response time for the input terminals prevents false input due to chattering or noise.
- The response time can be set for each input terminal.

**!**

- All input signals are immediately turned on or off when the condition is satisfied. However, chattering may occur depending on the signal selected. Use this function to hold/delay such signals.
- The response time is ignored when power turns on and when the system is reset. For example, if the power is turned on with the "Forward rotation [FW] (00)" input on, operation starts immediately after the internal reset process, regardless of the response time setting.

| Code | Item | Description | Data |
|---|---|---|---|
| [C160] to [C166] | Input terminal response time | Sets the response time (detection delay time) when the input terminal is turned on and off. The settings of [C160] to [C166] correspond to the input terminals [1] to [7], respectively.<br>The response time is approximately 0 to 400 ms as against the set value of 0 to 200. (Set value × 2 ms) | 0 to 200 |

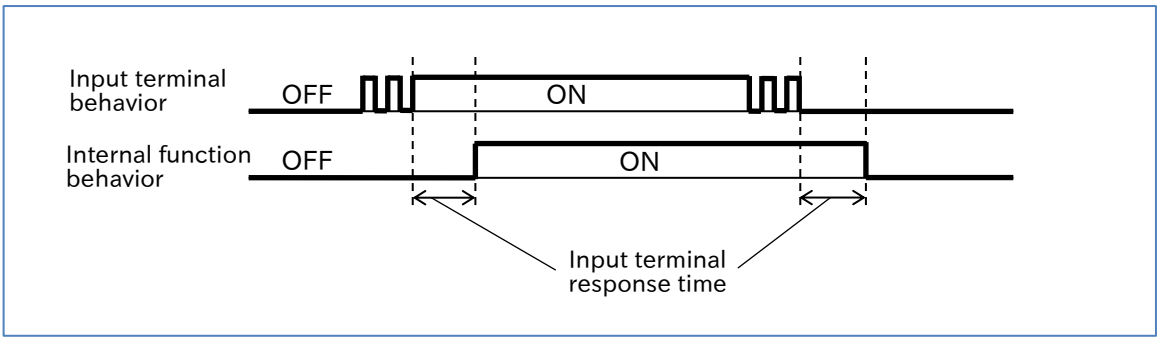

## 9.15.3 Adjusting the Analog Input

Q

- How to set an arbitrary analog voltage input (e.g., 0 to 5 VDC) to an arbitrary frequency command (e.g., 10 Hz to 40 Hz)?
- How to use analog input for frequency and torque commands?

A

- The analog start/end function allows any range of analog input from the [Ai1]/[Ai2] terminals to be changed to any range of frequency commands (or torque commands, PID feedback input, etc.).
- When both the start and end values are set to 0.00 Hz, the analog start/end function is disabled and the analog input operates at a frequency of 0 Hz to the maximum frequency.

!

- When shipped from the factory, the analog input is adjusted to the full scale of the input command with the voltage input of 9.8 VDC and the current input of 19.8 mA. This can be fine-tuned as necessary.
- When "PID enable [A071]" is enabled, the setting range of [A011]/[A012]/[A101]/[A102] on the keypad changes from 0% to the percentage of the maximum settable frequency (590 Hz) when "Maximum frequency [A004]" is taken as 100%. When analog input is used as PID target value input/PID feedback data input/PID feed-forward input, set to 0 to 10 VDC/4 to 20 mA = 0 to 100% as a default. For details, refer to "9.8.1 Using PID Control".
- Even if "Torque limit selection [b040]" and "Torque reference input source selection [P033]" are set as analog input, the start and end value settings such as [A011] will remain at from 0 to the maximum frequency setting. In this case, convert "Maximum frequency [A004]" to 200% and set the values.

| Code | Item | Description | Data |
|---|---|---|---|
| [A011] | [Ai1] start value | Sets the frequency command value when the analog input value is the start ratio. | 0.00 to 590.00 (Hz)<br>When PID is enabled:<br>0.00 to 590/[A004] × 100 |
| [A101] | [Ai2] start value | | |
| [A161] | POT start value | | |
| [A012] | [Ai1] end value | Sets the frequency command value when the analog input value is the end ratio. | |
| [A102] | [Ai2] end value | | |
| [A162] | POT end value | | |
| [A013] | [Ai1] start rate | Sets the start value of the analog command input as a percentage when 10 VDC or 20 mA is taken as 100%. | 0 to<br>[Ai1]/[Ai2]/POT end ratio (%) |
| [A103] | [Ai2] start rate | | |
| [A163] | POT start rate | | |
| [A014] | [Ai1] end rate | Sets the end value of the analog command input as a percentage when 10 VDC or 20 mA is taken as 100%. | [Ai1]/[Ai2]/POT start ratio to 100 (%) |
| [A104] | [Ai2] end rate | | |
| [A164] | POT end rate | | |
| [A015] | [Ai1] start value selection | 00: The command value from 0% to [A013]/[A103]/[A163] will be the start value ([A011]/[A101]/[A161]).<br>01: The command value for 0% to the start ratio will be 0 Hz. | 00 (start value)/<br>01 (0%) |
| [A105] | [Ai2] start value selection | | |
| [A165] | POT start selection | | |
| [A016] | Analog input filter time constant | 1 to 30:<br>It will be the set value × 2 ms first-order filter<br>31:<br>It will be 500 ms filter (±0.1 Hz with hysteresis) | 1 to 30, 31 (500 ms) |
| [C081] | [Ai1] Input gain adjustment | Applies gain to the analog input from the [Ai1]/[Ai2] terminals to fine-tune the input value. | 0.0 to 200.0 (%) |
| [C082] | [Ai2] Input gain adjustment | | 0.0 to 200.0 (%) |

## A Example of the analog start/end function setting

■ Example 1. Start value selection = 00

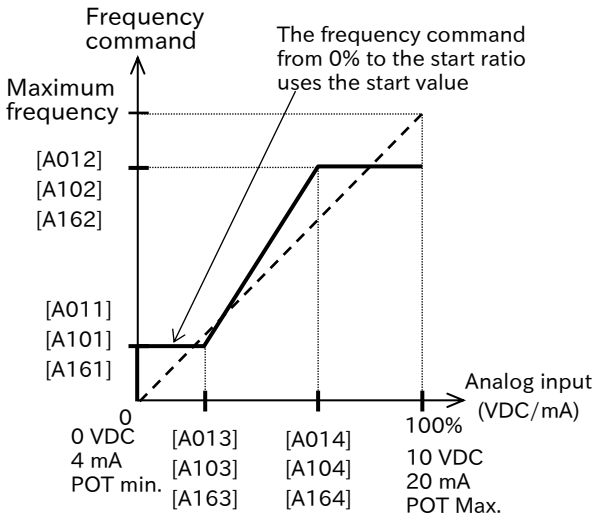


■ Example 2. Start value selection = 01

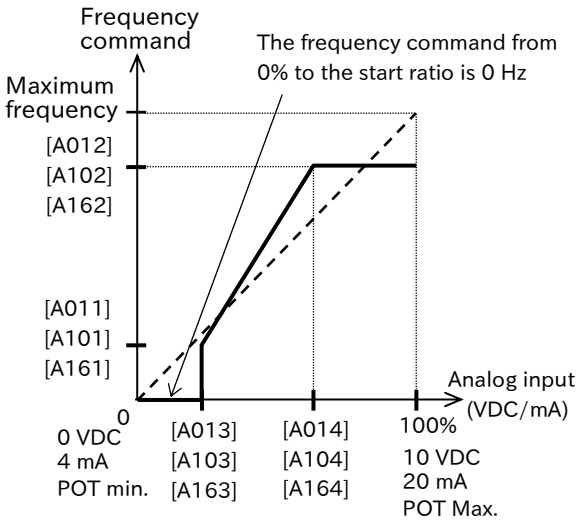


## A Fine-tuning by analog input adjustment gain

- The figure below shows an example of the "[Ai1] Input gain adjustment [C081]" and "[Ai2] Input gain adjustment [C082]" settings. The analog input scale conversion (for example, changing the analog input range of the frequency command from the input of 0 to 10 VDC to that of 0 to 5 VDC) should normally be set using the analog start/end function.
- This function should be used for fine-tuning when the analog start/end function results in a discrepancy.

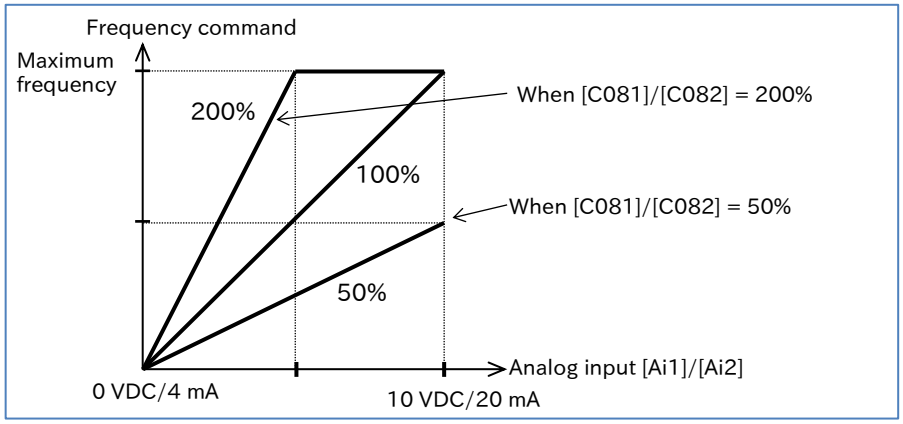

## A Command selection and input scale for analog input

- Analog inputs from the [Ai1]/[Ai2] terminals can be switched to frequency commands/torque commands/PID feedback signals, etc. by combining various parameter settings.
- The table below lists the input commands for which analog input can be selected, related setting parameters, and the full-scale range for each input command. For details, refer to the section describing details of each item listed in the table below.

!

- Depending on the setting, a single analog input value may be duplicated and input as two commands. Please be careful not to allow duplicate inputs.
- When "Torque limit selection [b040]" or "Torque reference input source selection [P033]" is set as analog input, convert "Maximum frequency [A004]" to 200% and set the values.

| Input command | Setting | Full scale range of each command when the input is 0 to 10 VDC/4 to 20 mA |
|---|---|---|
| Output frequency command | • Frequency input source selection [A001] = Control terminal (01)<br>• Selects [Ai1] (Voltage input) or [Ai2] (Current input) depending on the "[AT] selection [A005]" setting and the on/off state of the [AT] terminal.<br>• For details, refer to "9.2.3 Setting Frequency Command by Analog Inputs (Voltage/Current)". | 0 to maximum frequency (Hz) |
| PID feedback | • PID enable [A071] = Enable (01) or (02)<br>• PID feedback input source selection [A076] = [Ai2] terminal input (current input) (00) or [Ai1] terminal input (voltage input) (01)<br>• For details, refer to "9.8.1 Using PID Control". | 0 to 100.00 (%) |
| PID feed-forward input source selection | • PID enable [A071] = Enable (01) or (02)<br>• PID feed-forward input source selection [A079] = [Ai1] terminal input (voltage input) (01) or [Ai2] terminal input (current input) (02)<br>• For details, refer to "9.8.1 Using PID Control". | 0 to 100.00 (%) |
| Torque limit | • Torque limit selection [b040] = Analog input (02)<br>• Torque limit analog input is valid only for the [Ai1] terminal (voltage input).<br>• For details, refer to "9.6.2 Driving with Limited Torque". | 0 to 200.00 (%) |
| Torque command | • Torque reference input source selection [P033] = [Ai1] terminal (00) (voltage input) or [Ai2] terminal (current input) (01)<br>• For details, refer to "9.6.3 Driving by Torque Reference". | 0 to 200.00 (%) |

# 9.16 Functions with External Signal Output

## 9.16.1 Using External I/O Output Signal Functions

Q
- How to detect warning, error, and status signals emitted by the inverter with an external system?

A
- Output terminals [11], [12], [AL0]-[AL1]/[AL0]-[AL2] are intelligent output terminals. By assigning the functions in the list of output terminal functions shown on the next page to [C021], [C022], and [C026], the specified functions can be assigned to the corresponding output terminals.
- The output terminals [11], [12], [AL0]-[AL1]/[AL0]-[AL2] can be individually selected as "a" contact (NO) input or "b" contact (NC) input by setting [C031], [C032], and [C036].
- The output terminals [11] and [12] are open collector outputs, and the output terminals [AL0]-[AL1]/[AL0]-[AL2] are "c" contact relay outputs.

!
- When using a "c" contact relay, check the power supply status and the open/close status of the relay output terminals.

| Code | Item | Description | Data |
|---|---|---|---|
| [C021]<br>[C022]<br>[C026] | Output terminal function | Assigns output terminal functions to the output terminals [11], [12], [AL0] to [AL1]/[AL0] to [AL2]. The settings of [C021], [C022], and [C026] correspond to the output terminals, respectively. | Refer to the list of output terminal functions on the next page. |
| [C031]<br>[C032]<br>[C036] | Output terminal active state | Operates as "a" contact (NO). | 00 |
| | | Operates as "b" contact (NC). | 01 |

### ■ Open collector output terminal specifications

| Output terminal | Electrical characteristics |
|---|---|
| [11] | Voltage decreases when ON: 4 VDC or less<br>Allowable maximum voltage: 27 VDC<br>Allowable maximum current: 50 mA |
| [12] | |
| [CM2] | Common terminal of [11] and [12]<br>Allowable maximum current: 100 mA |

| Output terminal active state | Power state | Terminal function output | Open collector operation |
|---|---|---|---|
| 00<br>(NO: Normally Open) | ON | ON | Closed |
| | | OFF | Open |
| | OFF | - | - |
| 01<br>(NC: Normally Closed) | ON | ON | Open |
| | | OFF | Closed |
| | OFF | - | - |

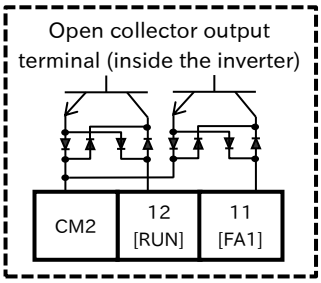


* Terminal names such as [FW] under the terminal numbers are initial assigned functions when "Initialize data selection [b085]" set to "Pattern 0 (00)". For details of initial setting when [b085] is set to other value, refer to "18.2.5 C Parameter Group".

## Relay output terminal specifications

| Output terminal | | Electrical characteristics | |
|---|---|---|---|
| | | Resistance load | Induced load |
| [AL1] – [AL0] | Maximum contact capacity | 250 VAC, 2 A<br>30 VDC, 3 A | 250 VAC, 0.2 A<br>30 VDC, 0.6 A |
| | Minimum contact capacity | 100 VAC, 10 mA<br>5 VDC, 100 mA | |
| [AL2] – [AL0] | Maximum contact capacity | 250 VAC, 1 A<br>30 VDC, 1 A | 250 VAC, 0.2 A<br>30 VDC, 0.2 A |
| | Minimum contact capacity | 100 VAC, 10 mA<br>5 VDC, 100 mA | |

| Relay terminal active state | Power state | Terminal function output (Inverter alarm state) | Output terminal status | |
|---|---|---|---|---|
| | | | [AL1]-[AL0] | [AL2]-[AL0] |
| 00<br>(NO: Normally Open) | ON | ON (Trip) | Closed | Open |
| | | OFF (Normal) | Open | Closed |
| | OFF | - | Open | Closed |
| 01<br>(NC: Normally Closed) | ON | ON (Trip) | Open | Closed |
| | | OFF (Normal) | Closed | Open |
| | OFF | - | Open | Closed |

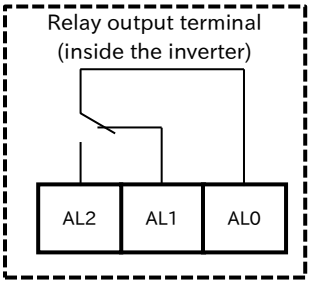


* The function assigned to the relay output terminals when shipped from the factory/initialized is "Alarm [AL]".

## ■ List of output terminal functions

| Data | Symbol | Function name | Page |
|---|---|---|---|
| 00 | RUN | Running | 9-12-1 |
| 01 | FA1 | Constant-frequency reached | 9-13-1 |
| 02 | FA2 | Set frequency overreached | 9-13-2 |
| 03 | OL | Overload warning notice | 9-11-3 |
| 04 | OD | Over deviation for PID control | 9-8-2 |
| 05 | AL | Alarm | 9-11-1 |
| 06 | FA3 | Set frequency reached | 9-13-3 |
| 07 | OTQ | Over-torque/under-torque | 9-6-4 |
| 09 | UV | Undervoltage | 9-9-10 |
| 10 | TRQ | Torque limited | 9-6-2 |
| 11 | RNT | Accumulated RUN time over | 9-11-9 |
| 12 | ONT | Accumulated power-on time over | |
| 13 | THM | Electronic thermal alarm (Motor) | 9-11-5 |
| 19 | BRK | Brake release | 9-7-16<br>9-14-13 |
| 20 | BER | Brake error | 9-7-20<br>9-14-13 |
| 21 | ZS | Zero speed detection | 9-13-4 |
| 22 | DSE | Speed over deviation | 9-5-8<br>9-5-16 |
| 23 | POK | Positioning completed | 9-14-2 |
| 24 | FA4 | Set frequency overreached 2 | 9-13-2 |
| 25 | FA5 | Set frequency reached 2 | 9-13-3 |
| 26 | OL2 | Overload warning notice 2 | 9-11-3 |
| 27 | Ai1Dc | Analog [Ai1] disconnection detection | 9-11-10 |
| 28 | Ai2Dc | Analog [Ai2] disconnection detection | |

| Data | Symbol | Function name | Page |
|---|---|---|---|
| 31 | FBV | PID feedback comparison | 9-8-2 |
| 32 | NDc | Communication line disconnection | 11-1-1 |
| 33 | LOG1 | Logical operation result 1 | 9-13-5 |
| 34 | LOG2 | Logical operation result 2 | |
| 35 | LOG3 | Logical operation result 3 | |
| 39 | WAC | Capacitor life warning | 9-11-7 |
| 40 | WAF | Cooling-fan life warning | 9-11-8 |
| 41 | FR | RUN command active | 9-12-3 |
| 42 | OHF | Cooling fin overheat warning | 9-11-6 |
| 43 | LOC | Low current signal | 9-11-4 |
| 44 | MO1 | General-purpose output 1 | 12-2-3 |
| 45 | MO2 | General-purpose output 2 | |
| 46 | MO3 | General-purpose output 3 | |
| 50 | IRDY | Inverter ready | 9-12-4 |
| 51 | FWR | Forward rotation | 9-12-2 |
| 52 | RVR | Reverse rotation | |
| 53 | MJA | Major failure | 9-11-2 |
| 54 | WCAi1 | Window comparator [Ai1] | 9-11-10 |
| 55 | WCAi2 | Window comparator [Ai2] | |
| 58 | FREF | Frequency reference by keypad | 9-2-3 |
| 59 | REF | RUN command by keypad | 9-1-2 |
| 60 | SETM | 2nd-motor control is selected | 9-7-18 |
| 62 | EDM | STO state monitor output | 14-1-3 |
| 63 | OPO[*1] | Option output | - |
| 64 | FSC | STO input discrepancy | 14-1-4 |
| no | no | No assignment | - |

*1. Option output (OPO) is for an extension function in the future and currently not functioning. Do not assign this function.

## 9.16.2 Delaying and Holding Output Signals

Q
- How to slow down the output signal response?
- How to suppress signal chattering?

A
- On-delay time and off-delay time can be set for each output terminal.

!
- All output signals are immediately turned on or off when the condition is satisfied. Chattering may occur depending on the selected signal. Use this function to hold/delay such signals.

| Code | Item | Description | Data |
|---|---|---|---|
| [C130] | Output terminal [11] on-delay time | Sets the on-delay time for the output terminals. | 0.0 to 100.0 (s) |
| [C132] | Output terminal [12] on-delay time | | |
| [C140] | Output terminal [AL] on-delay time | | |
| [C131] | Output terminal [11] off-delay time | Sets the off-delay time for the output terminals. | 0.0 to 100.0 (s) |
| [C133] | Output terminal [12] off-delay time | | |
| [C141] | Output terminal [AL] off-delay time | | |

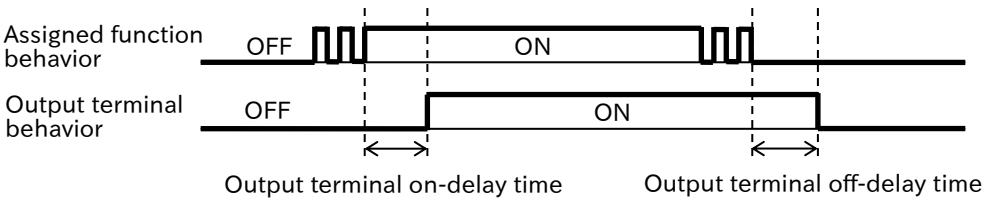

## 9.16.3 Outputting Monitor Data by Pulse Output

**Q**

- How to output the inverter monitor data externally by pulse output?
- How to acquire data with the digital frequency counter?

**A**

- The digital output function allows monitored values such as output frequency and output current to be output from the [Ao2] terminal by PWM output or pulse output.
- Use the digital frequency counter to monitor pulse output data. For other output signals, use the analog meter.

**!**

- Pulse output cannot exceed the maximum output range (32 kHz) of the [Ao2] terminal.

| Code | Item | Description | Data |
|---|---|---|---|
| [C027] | [Ao2] Output monitor selection | Selects data to be output from the [Ao2] terminal. | 00 to 16 |

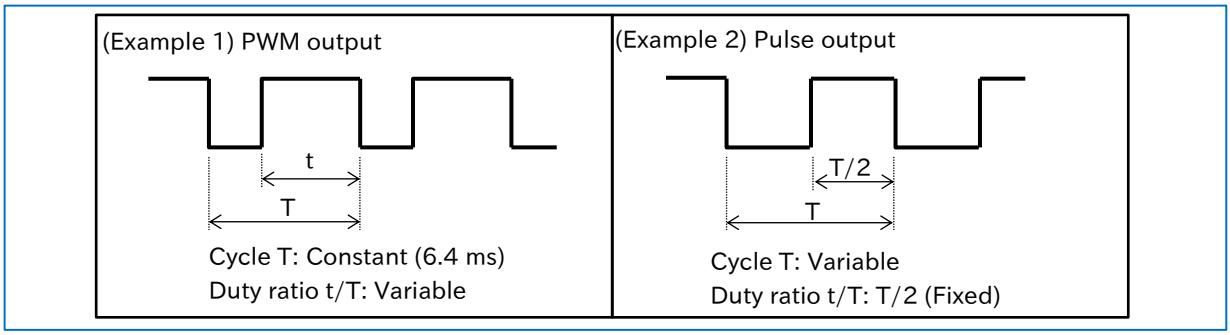


### List of [Ao2] terminal output data ([C027] set values)

- The following lists the data that can be output from the [Ao2] terminal.

| Data | Name | Output full scale value | Output type |
|---|---|---|---|
| 00 | Output frequency*1*2 | 0 to the maximum frequency (Hz) | PWM output |
| 01 | Output current | 0 to 200 (%) | PWM output |
| 02 | Output torque*3 | 0 to 200 (%) | PWM output |
| 03 | Digital output frequency*4 | 0 to the maximum frequency (Hz) | Pulse output |
| 04 | Output voltage | 0 to 133 (%)<br>(e.g., Duty ratio : approx. 0.75 at 200 V in 200 V class) | PWM output |
| 05 | Input power | 0 to 200 (%) | PWM output |
| 06 | Electronic thermal load ratio | 0 to 100 (%) | PWM output |
| 07 | LAD frequency*1 | 0 to the maximum frequency (Hz) | PWM output |
| 08 | Digital current monitor | Sets the output current for the [C030] setting to 1,440 Hz. | Pulse output |
| 10 | Cooling fin temperature | 0 to 200 (˚C) (0 output for temperatures below 0˚C) | PWM output |
| 12 | General-purpose analog YA(0)*5 | 0 to 100% | PWM output |
| 15 | Pulse input monitor | 0 to 100% | Pulse output |
| 16 | Option | - (currently no supported options) | PWM output |

*1. "LAD frequency" is the frequency commanded by the inverter and corresponds to "Output frequency monitor [d001]". "Output frequency (00)" is a value that takes into account vector control compensation and stabilization control such as sensorless vector control. "Output frequency" output may appear unstable at low speeds during overload limit deceleration, etc. In this case, changing it to "LAD frequency" results in a better stability.

*2. When "Speed feedback" is set for "Pulse input, target function selection [P003]", "detect speed monitor [d008]" is outputted.

*3. Valid only when the control method is sensorless vector control.

*4. When "Frequency conversion gain [b086]" is set, a converted value is outputted for the digital output frequency.

*5. For details on YA(0), refer to the "Easy-Sequence Function (EzSQ) Programming Guide (NT2021*X)".

## [Ao2] terminal output PWM/pulse output adjustment

- When PWM output is selected for "[Ao2] Terminal output selection [C027]" ([C027] = 00 to 02, 04 to 07, 10, 12), the output gain can be set with "[Ao2] Gain adjustment [C105]".
- When "Digital current monitor (08)" is selected for [C027], set the reference value of the output pulse with "[Ao2] Terminal reference frequency [C030]". The pulse is outputedtt in proportion so that the output current value set for [C030] is to be 1,440 Hz.

When "Pulse input monitor (15)" is selected for [C027], output pulses can be adjusted with "Pulse input/ monitor output scale convert gain [C047]".
(Output pulse frequency = Input pulse frequency x [C047])

| Code | Item | Description | Data |
|---|---|---|---|
| [C030] | [Ao2] Output reference value | When "Digital current monitor (08)" is selected for [C027], the current value that makes the [Ao2] terminal output 1,440 Hz is set. | (0.20 to 2.00) × rated current (A) |
| [C047] | Pulse input/monitor output scale convert gain | When "Pulse input monitor (15)" is selected for [C027], scale conversion is applied to the input pulse frequency and the converted value is output.<br>Output pulse frequency<br>=[C047] × input pulse frequency | 0.01 to 99.99 |
| [C105] | [Ao2] Gain adjustment | Sets the gain of the [Ao2] terminal output. | 50 to 200 (%) |

## (Example 1) PWM output for output frequency monitor ([C027] = "Output frequency (00)")

- PWM output is 100% output when output frequency is at the maximum frequency. Since the full scale of "Output frequency" is the maximum frequency, the gain setting is left at the default value of 100%.

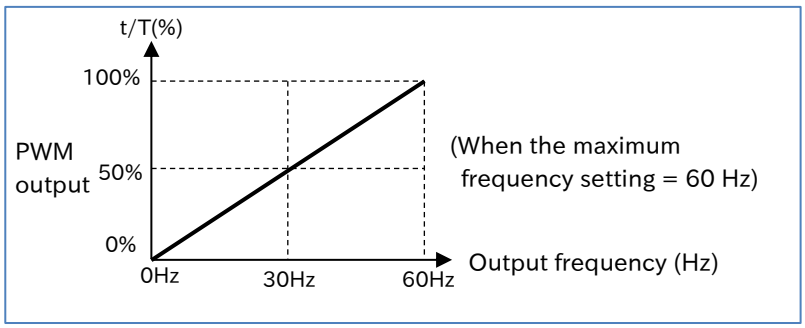


## (Example 2) PWM output for output current monitor ([C027] = "Output current (01)")

- PWM output is 100% when output current is at the rated output current. Since the full scale of "Output current (01)" is 200% of the rated output current, setting "[Ao2] Gain Adjustment [C105]" = 200% results in 100% PWM output at the rated current output.

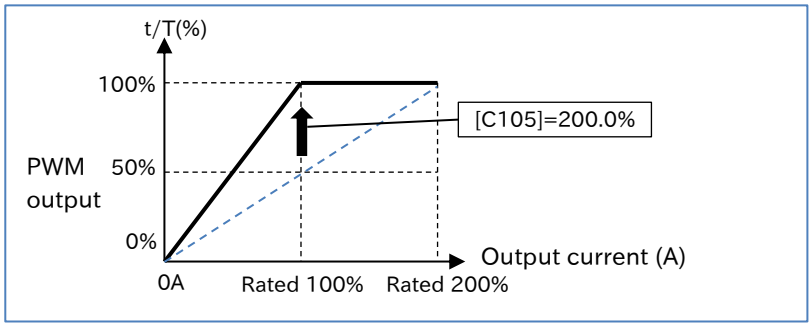

## 9.16.4 Outputting Monitor Data by Analog Output

Q
- How to output the inverter monitor data externally by analog output?

A
- The [Ao1] terminal is an analog voltage output terminal from 0 to 10 VDC. Output frequency and output current can be monitored.

!
- Analog output may not be stable immediately after power-on or power interruption.

| Code | Item | Description | Data |
|---|---|---|---|
| [C028] | [Ao1] Output monitor selection | Selects data to be output from the [Ao1] terminal. | 00 to 16 |

### List of [Ao1] terminal output data ([C028] set values)

- The following lists the data that can be output from the [Ao1] terminal.

| Data | Name | Output full scale value |
|---|---|---|
| 00 | Output frequency*1*2 | 0 to the maximum frequency (Hz) |
| 01 | Output current | 0 to 200 (%) |
| 02 | Output torque*3 | 0 to 200 (%) |
| 04 | Output voltage | 0 to 133 (%)<br>(e.g., Approx. 7.5 VDC at 200 V in 200 V class) |
| 05 | Input power | 0 to 200 (%) |
| 06 | Electronic thermal load ratio | 0 to 100 (%) |
| 07 | LAD frequency*1 | 0 to the maximum frequency (Hz) |
| 10 | Cooling fin temperature | 0 to 200 (˚C) (0 output for temperatures below 0˚C) |
| 11 | Output torque (signed)*3*6 | 0 to 200%*6 |
| 13 | General-purpose analog YA(1)*5 | 0 to 100% |
| 16 | Option | - (currently no supported options) |

*1. "LAD frequency (07)" is the frequency commanded by the inverter and corresponds to "Output frequency monitor [d001]". "Output frequency (00)" is a value that takes into account vector control compensation and stabilization control such as sensorless vector control. "Output frequency" output may appear unstable at low speeds during overload limit deceleration, etc. In this case, changing it to "LAD frequency" results in a better stability.

*2. When "Speed feedback" is set for "Pulse input, target function selection [P003]", "Speed detection value monitor [d008]" is outputted.

*3. Valid only when the control method is sensorless vector control.

*4. When "Frequency conversion gain [b086]" is set, a converted value is outputted for the digital output frequency.

*5. For details on YA(1), refer to the "Easy-Sequence Function (EzSQ) Programming Guide (NT2021*X)".

*6. Specifications of output torque (signed) are as follows.

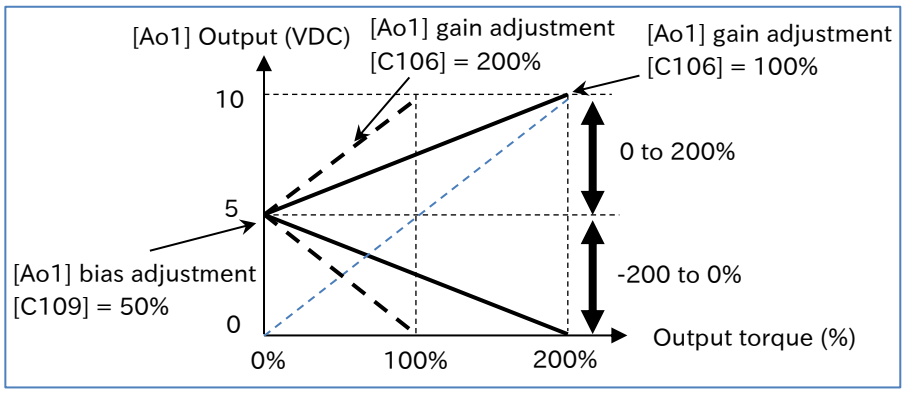

## [Ao1] terminal output gain/bias adjustment

- The gain/bias of the analog output can be adjusted to match the meter connected to the [Ao1] terminal.
- When reset input is applied, the bias temporarily becomes 0%.
- After adjusting the bias with [C109], use [C106] to adjust the gain so that the meter is at the full scale.

| Code | Item | Description | Data |
|---|---|---|---|
| [C106] | [Ao1] gain adjustment | Sets the gain of the [Ao1] terminal output. | 50 to 200 (%) |
| [C109] | [Ao1] bias adjustment | Sets the bias of the [Ao1] terminal output. | 0 to 100 (%) |

### ■ [Ao1] bias adjustment

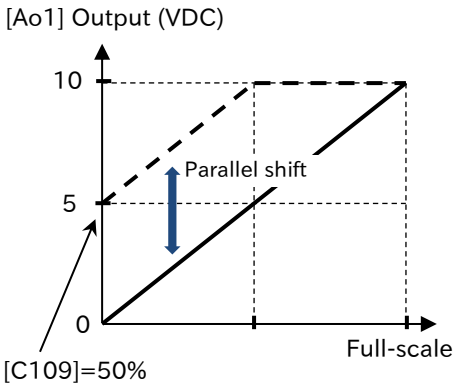


### ■ [Ao1] gain adjustment

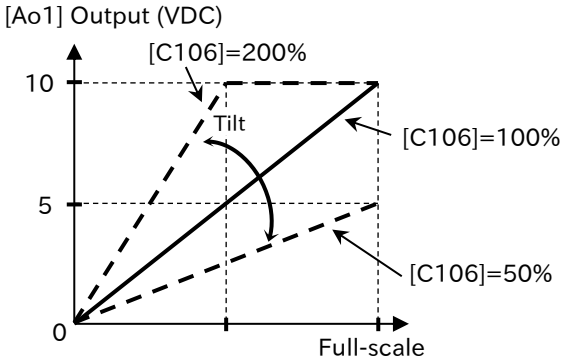


### ■ (Example 1) When the output frequency from 0 to the maximum frequency is the output of 0 to 5 VDC

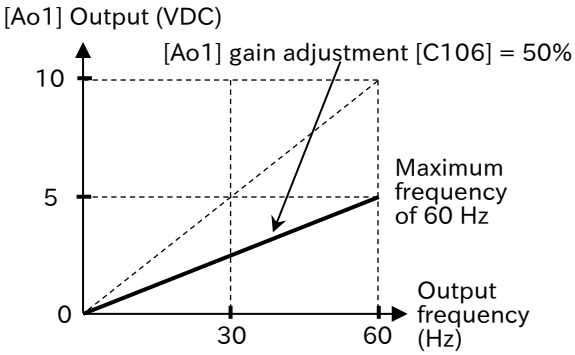


### ■ (Example 2) When the output current 0 to 100% is the output of 0 to 10 VDC

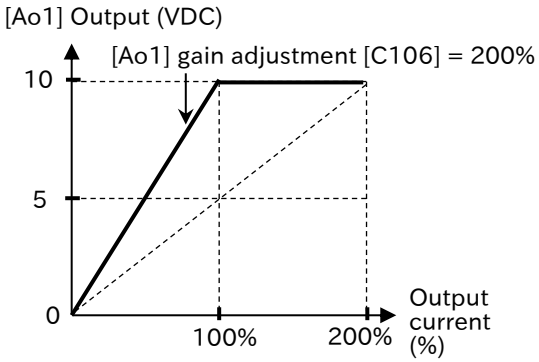

10

# Chapter 10 Monitor Functions

This chapter describes various types of data that can be monitored by the inverter's keypad or remote operator. For more information on using keypad to view the monitors, see "Chapter 7 Keypad and Related Functions".
When performing each work, carefully read "Chapter 1 Safety Instructions/Risks" and the corresponding chapters, and pay attention to safety.


**10.1 Check the Operation Data ..... 10-1-1**
- 10.1.1 Monitor the Output Frequency ..... 10-1-1
- 10.1.2 Monitor the Output Current ..... 10-1-2
- 10.1.3 Monitor the Direction of Rotation ..... 10-1-2
- 10.1.4 Monitor the Detected Speed of the Motor ..... 10-1-3
- 10.1.5 Monitor the Data Related to Torque Reference/Output Torque ..... 10-1-4
- 10.1.6 Monitor the Data Related to Simple Position Control ..... 10-1-5
- 10.1.7 Monitor the Output Voltage ..... 10-1-6
- 10.1.8 Monitor the Input Power/Accumulated Power of the Inverter ..... 10-1-7
- 10.1.9 Monitor P-N Voltage (Internal DC Voltage) ..... 10-1-8
- 10.1.10 Monitor the Load Ratio of the Braking Resistor ..... 10-1-9
- 10.1.11 Monitor the Electronic Thermal Load Ratio ..... 10-1-10

**10.2 Check I/O Terminal Related Data ..... 10-2-1**
- 10.2.1 Monitor the Status of Input and Output Terminals ..... 10-2-1
- 10.2.2 Monitor the Analog Input [Ai1]/[Ai2] Terminal/Pulse Input [PLA] Terminal ..... 10-2-2

**10.3 Check the Information Related to the Internal Status of the Inverter ..... 10-3-1**
- 10.3.1 Monitor the Accumulated Run Time/Accumulated Power-On Time of the Inverter ..... 10-3-1
- 10.3.2 Monitor the Cooling Fin Temperature ..... 10-3-2
- 10.3.3 Monitor the Results of Lifetime Diagnosis ..... 10-3-3
- 10.3.4 Monitor the Operation Mode of the Inverter ..... 10-3-4
- 10.3.5 Monitor the Frequency Command Source and RUN Command Source ..... 10-3-5
- 10.3.6 Monitor Two Types of Data on a Single Monitor Screen ..... 10-3-6

**10.4 Check EzSQ Function/PID Function Related Data ..... 10-4-1**
- 10.4.1 Monitor EzSQ Function Related Data ..... 10-4-1
- 10.4.2 Monitor PID Function Related Data ..... 10-4-1

**10.5 Check Trip and Warning Related Information ..... 10-5-1**
- 10.5.1 Monitor the Number of Trips and Trip History ..... 10-5-1
- 10.5.2 Monitor Warning Information ..... 10-5-2

# 10.1 Check the Operation Data

## 10.1.1 Monitor the Output Frequency

Q
- How to check the output frequency?
- How to arbitrarily convert the output frequency for display?
- How to adjust the frequency reference with keypad while monitoring the output frequency with keypad?

A

### Output frequency monitor [d001]

- Displays the output frequency of the inverter. "0.00" is displayed during stop.
- When the content of [d001] is displayed, "Frequency monitor LED (Hz)" on the keypad lights.

| Code | Item | Description | Data |
|---|---|---|---|
| [d001] | Output frequency monitor | Displays the output frequency of the inverter. "0.00" is displayed during stop. The "Frequency monitor LED (Hz)" of the keypad lights while this data is displayed. | 0.00 to 590.00 (Hz) |

A

### Output frequency scale conversion monitor [d007]

- Displays the value obtained by converting [d001] with the factor set in "Frequency conversion gain [b086]". Used when you want to change the display unit, such as when you want to change the display from the output frequency to the motor rotation speed.
  (Example) Displays the motor rotation speed.
  Motor rotation speed N ($min^{-1}$) = (120 × f (Hz)) / P (number of motor poles)
  Therefore, if [b086] = 30.0 for a 4-pole motor, 1800 is displayed at 60 Hz.

| Code | Item | Description | Data |
|---|---|---|---|
| [d007] | Output frequency scale conversion monitor | Displays the value of [d001] × [b086]. | 0.00 to 58994.10 |
| [b086] | Frequency conversion gain | Set the conversion factor for [d007] display. | 0.01 to 99.99 |

A

### Frequency change function through monitor display

- When "Enable frequency changes through monitor display [b163]" is "Enable (01)", the frequency reference can be changed by the keypad while [d001] or [d007] is displayed only when "Frequency input source selection [A001][*1]" is "Parameter setting (02)" and inverter is running. When the [SET] key is pressed after changing the frequency reference, the changed frequency reference value is stored in the inverter internal memory.

!
- When "FUP/FDN data save enable [C101]" is "Save (01)", note that the changed frequency reference value is stored in the inverter internal memory when the power is shut off after changing [d001]/[d007]. For details, refer to "9.2.13 Increasing/Decreasing Frequency Command by Remote Control".
- Since "Output frequency setting or monitor [F001]" is rewritten while [d001]/[d007] is displayed, there may be a time difference between keypad operation and display depending on acceleration/deceleration time setting.
- Frequency cannot be changed while the inverter is stopped, during PID operation, or in the individual input mode by pressing and holding the [SET] key.

| Code | Item | Description | Data |
|---|---|---|---|
| [b163] | Enable frequency changes through monitor display | Disable: Frequency reference cannot be changed with [d001]/[d007]. | 00 |
| | | Enable: Frequency reference can be changed with [d001]/[d007]. | 01 |

## 10.1.2 Monitor the Output Current

Q
- How to check the rms value of the current flowing through the motor?
- How to see the movement of the output current?

A

### Output current monitor [d002]

- Displays the output current flowing to the motor. "0.00" is displayed during stop.
  While the content of [d002] is displayed, "Current monitor LED (A)" on the keypad lights.

!
- Due to the inverter's PWM output method, the lower the carrier frequency, the more the value of the monitor may fluctuate.

| Code | Item | Description | Data |
|---|---|---|---|
| [d002] | Output current monitor | Displays the output current of the inverter. "0.00" is displayed during stop. | 0.00 to 655.35 (A) |

## 10.1.3 Monitor the Direction of Rotation

Q
- How to check the operation direction of the inverter?

A

### Rotation direction monitor [d003]

- Displays the operation direction of the inverter. When the inverter is running (forward or reverse), the "running LED [RUN]" on the keypad lights.

!
- During trip occurrence, output shutdown at free-run input, or 0Hz operation, such as DC braking, the status is stop.

| Code | Item | Description | Data |
|---|---|---|---|
| [d003] | Rotation direction monitor | Displays the operation direction of the inverter. | F (forward) |
| | | | o (Stop) |
| | | | r (reverse) |

In general, when viewed from the shaft direction, counterclockwise rotation is forward of the motor.

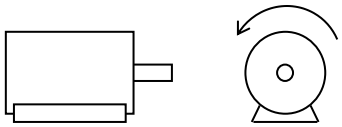

## 10.1.4 Monitor the Detected Speed of the Motor

Q

- How to know the actual speed feedback from the motor?

A

### Detect speed monitor [d008]

- Displays the actual rotation frequency feedback from the motor when performing V/f control with sensor or simple position control.
- This monitor is enabled when "Speed feedback (01)" is set to "Pulse input, target function selection [P003]".

!

- When using this monitor, set "Async. Motor number of poles, 1st-motor [H004]" and "Encoder constant [P011]" correctly. Refer to "9.5.8 Using Encoder Feedback" for details.

| Code | Item | Description | Data |
|---|---|---|---|
| [d008] | Detect speed monitor | Displays the actual rotation frequency at encoder feedback. | -590.00 to 590.00 (Hz) |
| [H004] | Async. Motor number of poles, 1st-motor | Sets the number of motor poles. | 2 to 48 (poles) |
| [P003] | Pulse input, target function selection | Speed feedback | 01 |
| [P011] | Encoder constant | Set the number of connected encoder pulses in terms of the number of pulses per motor rotation (multiplied by 1). | 32 to 1024 (pls) |
| [P901] | Speed detection filter constant for encoder pulse | Filter time constant for the speed detected by the encoder pulse input. | 0 to 9999 (ms) |

## 10.1.5 Monitor the Data Related to Torque Reference/Output Torque

Q
- How to check the torque reference value and torque bias value during torque control?
- How to check the output torque?

A

### Torque reference monitor [d009]

- Displays the torque reference value used for torque control.
- This monitor is enabled when "Permission of torque control [ATR] (52)" of the input terminal function is turned on and is in the torque control state, and displays the torque equivalent to the rated current of the inverter as 100%. For details, refer to "9.6.3 Driving by Torque Reference".

| Code | Item | Description | Data |
|---|---|---|---|
| [d009] | Torque reference monitor | Displays the current torque reference value. | -200 to 200 (%) |

A

### Torque bias monitor [d010]

- Displays the currently set torque bias value in sensorless vector control.
- This monitor is enabled when "Permission of torque control [ATR] (52)" of the input terminal function is turned on and is in the torque control state, and displays the torque equivalent to the rated current of the inverter as 100%. For details, refer to "9.6.4 Driving with Torque Bias".

| Code | Item | Description | Data |
|---|---|---|---|
| [d010] | Torque bias monitor | Displays the current torque bias value. | -200 to 200 (%) |

A

### Output torque monitor [d012]

- In sensorless vector control, the estimated output torque during speed control/torque control is displayed as 100% of the torque equivalent to the rated current of the inverter.
- In this monitor, powered is a positive value and regeneration is a negative value in forward rotation, and powered is a negative value and regeneration is a positive value in reverse rotation. For details, refer to "9.6.4 Driving with Torque Bias".

| Code | Item | Description | Data |
|---|---|---|---|
| [d012] | Output torque monitor | Displays the estimated output torque. | -200 to 200 (%) |

## 10.1.6 Monitor the Data Related to Simple Position Control

Q

- How to check the current position and position reference during simple positioning?

A

### Position reference monitor [d029]

- Displays the position reference value when simple positioning is enabled ("Speed feedback (01)" is set in "Pulse input, target function selection [P003]" and "Simple positioning enabled (02)" is set in "Simple positioning selection [P012]").
- For details on the simple position control function, refer to "9.14 Performing Positioning Operation (Simple Position Control Function)".

| Code | Item | Description | Data |
|---|---|---|---|
| [d029] | Position reference monitor | Displays the position reference value during simple positioning. | -268435455 to 268435455 (pls) |

A

### Current position monitor [d030]

- Displays the current position during simple positioning.
- This monitor is enabled when "Speed feedback (01)" is set to "Pulse input, target function selection [P003]". "Clearance of position deviation [PCLR] (47), "Position data presetting [PSET] (91)" of the input terminal function and "Save current position at power off [P081]" are also enabled. Refer to "9.14.2 Performing Homing Function during Positioning Operation" for details.

| Code | Item | Description | Data |
|---|---|---|---|
| [d030] | Current position monitor | Displays the current position during simple positioning. | -268435455 to 268435455 (pls) |

## 10.1.7 Monitor the Output Voltage

Q
- How to check the voltage output to the motor?
- How to see the movement of the output voltage?

A

### Output voltage monitor [d013]

- Displays the output voltage to the motor.

!
- The correct value may not be displayed if the input voltage is low or if the "Motor rated voltage [A082] *1" is not set correctly.

| Code | Item | Description | Data |
|---|---|---|---|
| [d013] | Output voltage monitor | Displays the voltage output to the motor. | 0.0 to 600.0 (V) |

*1. "2nd-motor control [SET]" target parameter. The second control parameter is also subject to setting.

## 10.1.8 Monitor the Input Power/Accumulated Power of the Inverter

Q
- How to know the input power to the inverter?
- How to know the accumulated input power of the inverter?

A

### Input power monitor [d014]

- Displays the input power (instantaneous value) of the inverter.

| Code | Item | Description | Data |
|---|---|---|---|
| [d014] | Input power monitor | Displays the input power (instantaneous value). It varies depending on the input power factor. | 0.0 to 100.0 (kW) |

A

### Accumulated input power monitor [d015]

- Displays the accumulated input power of the inverter.
- The gain of the displayed content can be converted using the "Display gain for the accumulated input power monitor [b079]".
  Displayed value of [d015] = [Actual accumulated power (kWh)] / "Display gain for the accumulated input power monitor [b079]"
  (Example) When [b079] is 100 and the value of [d015] is 1000, the accumulated power is 100,000 (kWh).

- This monitor value is stored in the internal memory of the inverter when the power is shut off. The data can be cleared by one of the following:
  - By changing the "Accumulated input power monitor clear [b078]" to 01 and pressing the [SET] key of the keypad, [d015] can be cleared to 0.
  - By assigning "Accumulation input power clear [KHC] (53)" to the input terminal and turning on that terminal, [d015] can be cleared to 0.

| Code | Item | Description | Data |
|---|---|---|---|
| [d015] | Accumulated input power monitor | Displays the accumulated value of input power. It varies depending on the input power factor. | 0.0 to 999900.0 (kWh) |
| [b078] | Accumulated input power monitor clear | Disable: Clear disabled | 00 |
| | | Clear:<br>Press the [SET] key of the keypad with this setting to clear Accumulated input power monitor to 0.<br>(This setting returns 00 after clearing.) | 01 |
| [b079] | Display gain for the accumulated input power monitor | Set the conversion factor for [d015] display. | 1 to 1000 |
| [C001] to [C007] | Input terminal [1] to [7] function | Accumulation input power clearance [KHC]:<br>When this signal is turned on, [d015] is cleared. | 53 |

## 10.1.9 Monitor P-N Voltage (Internal DC Voltage)

Q

- How to see the movement of the voltage between P and N terminal (internal DC voltage) of the inverter?
- How to monitor the voltage between P and N terminal (internal DC voltage) when the motor is in regenerative state?

A

### DC bus voltage monitor [d102]

- Displays the DC voltage (DC voltage between P and N on the inverter main circuit terminal block) charged in the main circuit capacitor of the inverter.
- During running, the monitor value also fluctuates according to the actual inverter DC voltage.

!

- The voltage between P-N is DC voltage. If the voltage between P and N exceeds approx. 400 VDC (200 V class)/ approx. 800 VDC (400 V class), "Overvoltage error [E07]" occurs.
- See "15.2 Troubleshooting for Protection Functions Related Error" for more information about troubleshooting when [E07] occurs.

| Code | Item | Description | Data |
|---|---|---|---|
| [d102] | DC bus voltage monitor | Displays the DC bus voltage of the inverter. | 0.0 to 1000.0 (VDC) |

## 10.1.10 Monitor the Load Ratio of the Braking Resistor

Q

- How to check the usage rate of the optional braking resistor?

A

### BRD load ratio monitor [d103]

- Displays the usage rate of the braking resistor operation circuit (BRD).
- To use the braking resistor operation circuit (BRD), the "Dynamic brake use ratio [b090]" setting is required. For details, refer to "9.9.5 Suppressing Overvoltage with Braking Resistor".

!

- If this monitor value exceeds the value set in "Dynamic brake use ratio [b090]", "Braking resistor overload error [E06]" will occur.
- For troubleshooting when "Braking resistor overload error [E06]" occurs, refer to "15.2 Troubleshooting for Protection Functions Related Error" for details.

| Code | Item | Description | Data |
|---|---|---|---|
| [d103] | BRD load ratio monitor | Displays the load ratio of the braking resistor. | 0.0 to 100.0 (%) |

## 10.1.11 Monitor the Electronic Thermal Load Ratio

Q

- How to check the overheat protection status of the motor?

A

### Electronic thermal load ratio monitor (Motor) [d104]

- Displays the electronic thermal load ratio of the motor.
- Set the electronic thermal function appropriately to ensure proper motor overload protection. For details, refer to "8.1.4 Setting Electronic Thermal for the Motor".

!

- If this monitor value reaches 100%, "Motor overload error [E05]" occurs.
- For troubleshooting when "Motor overload error [E05]" occurs, refer to "15.2 Troubleshooting for Protection Functions Related Error" for details.

| Code | Item | Description | Data |
|---|---|---|---|
| [d104] | Electronic thermal load ratio monitor (Motor) | Displays the electronic thermal load ratio of the motor. | 0.0 to 100.0 (%) |

# 10.2 Check I/O Terminal Related Data

## 10.2.1 Monitor the Status of Input and Output Terminals

Q
- How to know the current ON/OFF status of the input and output terminals?
- How to know if I/O terminal wirings are broken or not?

A

### Input terminal monitor [d005]

- Displays the input status of the input terminals by the position where keypad LEDs are lit.
- Input terminal monitor displays the physical ON/OFF status of terminals. It is not affected by the a/b contact setting.

!
- A reaction time of this monitor delays according to the setting of input terminal response time ([C160] to [C166]).
- When the monitor status does not change even if the input terminal is turned on or off, the input wires may be disconnected.
- When "External thermistor [PTC] (19)" is assigned to input terminal 5, it always remain in OFF state regardless of the input state.
- When the EDM switch is enabled, the monitors at input terminals 3/4 below indicate the status of ST1/ST2. However, when input terminals 3/4 are turned on, the input terminal functions set to [C003]/[C004] operate.

| Code | Item | Description | Data |
|---|---|---|---|
| [d005] | Input terminal monitor | Displays ON/OFF status of the input terminals on 7 segment LED of the keypad.<br>(Example) Input terminal 7, 2, 1: ON<br>Input terminal 8, 6, 5, 4, 3: OFF<br> 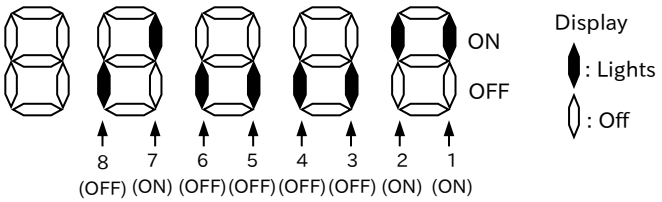 <br> | — |

A

### Output terminal monitor [d006]

- Displays the output status of the output terminals by the position where keypad LEDs are lit.
- Output terminal monitor displays the physical ON/OFF status of terminals. It is not affected by a/b contact setting.

!
- A reaction time of this monitor delays according to the setting of output terminal on-delay time ([C130] to [C141]).
- When the output terminal is not turned on or off even if the monitor status changes, the output wires may be disconnected.

| Code | Item | Description | Data |
|---|---|---|---|
| [d006] | Output terminal monitor | Displays ON/OFF status of the output terminals on 7 segment LED of the keypad.<br>(Example) Output terminal 11: ON<br>Output terminal 12, AL: OFF<br> 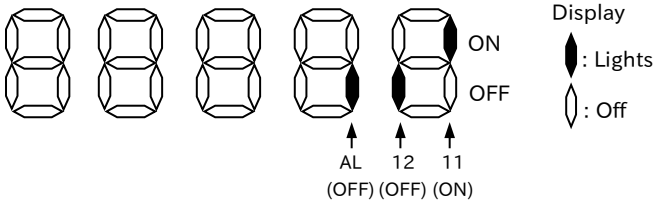 <br> | — |

## 10.2.2 Monitor the Analog Input [Ai1]/[Ai2] Terminal/Pulse Input [PLA] Terminal

Q
- How to check if voltage or current is input correctly to the analog input terminals?
- How to see the input frequency of the pulse input terminals?

A

### Analog input [Ai1] monitor [d130]/Analog input [Ai2] monitor [d131]

- The analog voltage/current input values to the [Ai1]/[Ai2] terminals are displayed as 10-bit data (0 to 1023) with 10 VDC/20 mA as the maximum.
- The value of A/D conversion of the analog input can be monitored.

!
- Considering variations in the input circuit, the monitor values are adjusted at the factory so that the maximum value of 1023 is obtained when values slightly larger than 10 VDC/20 mA are input.

| Code | Item | Description | Data |
|---|---|---|---|
| [d130] | Analog input [Ai1] monitor | Displays the analog input 0 to maximum value of the [Ai1] terminal as 10-bit data. | 0 to 1023 |
| [d131] | Analog input [Ai2] monitor | Displays the analog input 0 to maximum value of the [Ai2] terminal as 10-bit data. | 0 to 1023 |

A

### Pulse input monitor [d133]

- Displays the pulse frequency input from the [PLA] terminal in % where the "Pulse frequency scale [P055]" setting is 100%.
- This monitor is always enabled regardless of the setting of "Pulse input, target function selection [P003]".
- For details, refer to "9.2.8 Setting Frequency Command by Pulse Input".

!
- This monitor counts only pulse input from the [PLA] terminal. In case using the [PLB] terminal and checking its input status, set [P003] to "Speed feedback (01)" and monitor "Detect speed monitor [d008] or "Current position monitor [d030]".Refer to "9.5.8 Using Encoder Feedback" for details.

| Code | Item | Description | Data |
|---|---|---|---|
| [d133] | Pulse input [PLA] monitor | Displays the pulse frequency input from the [PLA] terminal in % where the setting in [P055] is 100%. | 0.00 to 100.00 (%) |
| [P055] | Pulse frequency scale | Set the pulse frequency equivalent to the highest frequency. | 1.0 to 32.0 (kHz) |

# 10.3 Check the Information Related to the Internal Status of the Inverter

## 10.3.1 Monitor the Accumulated Run Time/Accumulated Power-On Time of the Inverter

Q
- How to check the total running time of the inverter after shipment from the factory?
- How to check the total power-on time of the inverter after shipment from the factory?

A

### Accumulated RUN time monitor [d016]

- Displays the accumulated time output to the motor when the inverter is in operation.
- This data is stored in the internal memory of the inverter when the power is shut off.

| Code | Item | Description | Data |
|---|---|---|---|
| [d016] | Accumulated RUN time monitor | Displays the total operation time of the inverter after shipment from the factory. This data is stored in the internal memory when the power is shut off. | 0 to 999000 (hr) |

A

### Accumulated power-on time monitor [d017]

- Displays the accumulated energization time of the inverter.
- This data is stored in the internal memory of the inverter when the power is shut off.

| Code | Item | Description | Data |
|---|---|---|---|
| [d017] | Accumulated power-on time monitor | Displays the total power-on time of the inverter after shipment from the factory. This data is stored in the internal memory when the power is shut off. | 0 to 999000 (hr) |

!
- [d016] and [d017] cannot be cleared even if parameters are initialized.

## 10.3.2 Monitor the Cooling Fin Temperature

Q

- How to know the inverter cooling fin temperature?

A

### Cooling fin temperature monitor [d018]

- Displays the inverter cooling fin temperature.

| Code | Item | Description | Data |
|---|---|---|---|
| [d018] | Cooling fin temperature monitor | Displays the temperature of the cooling fin. | −20.0 to 150.0 (˚C) |

## 10.3.3 Monitor the Results of Lifetime Diagnosis

Q

- How to check the life of the inverter?
- How to know the maintenance timing?

A

### Life assessment monitor [d022]

- Displays the status of the end-of-life components by the position where 7 segment LED on the keypad are lit.
- Life assessment monitor shows the status of following two items.
- 1: Life of electrolytic capacitors on board (excluding main circuit smoothing capacitor).
- 2: Life of cooling fan
- Life diagnosis can be output as output signals by "Capacitor life warning [WAC] (039)" and "Cooling-fan life warning [WAF] (040)" of the output terminal function. For details, see "9.11.7 Outputting a Warning for Capacitor Life on the Control Board" and "9.11.8 Outputting a Warning for Cooling Fan Life".

!

- The life of the electrolytic capacitors on the board is calculated once per 10 minutes. If the power supply is repeatedly turned ON/OFF shorter than this cycle, the life cannot be diagnosed normally.
- Models of single-phase 200 V class 0.75 kW or less, three-phase 200 V class 0.75 kW or less, and three-phase 400 V class 0.4 kW or less are not equipped with a cooling fan, so the cooling fan life diagnosis function does not work.

| Code | Item | Description | Data |
|---|---|---|---|
| [d022] | Life assessment monitor | Displays the status of the end-of-life components.<br>1: Electrolytic capacitors on board<br>2: Cooling fan<br> 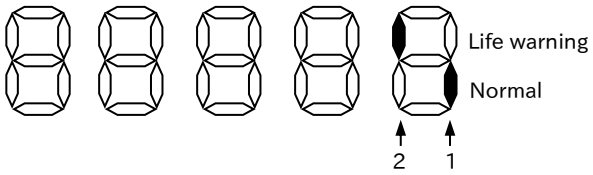 <br> | — |

## 10.3.4 Monitor the Operation Mode of the Inverter

Q

- How to check the current load specification selection?
- How to check the current drive motor type (induction motor/PM motor)?

A

### Inverter mode monitor [d060]

- Displays the current inverter mode.
- The inverter mode is changed by "Load type selection [b049]" and "Inverter mode selection [b171]". For more information, see "8.1.2 Changing the Load Rating of the Inverter" and "8.1.6 Changing the Operation Mode of the Inverter".

!

- The rated current and current derating characteristics will change depending on the selection of the load specifications. Check them together.

| Code | Item | Description | Data |
|---|---|---|---|
| [d060] | Inverter mode monitor | IM (induction motor), Normal duty | I-C |
| | | IM (induction motor), Light Duty | I-V |
| | | PM motor | P |

## 10.3.5 Monitor the Frequency Command Source and RUN Command Source

Q
- How to check if RUN command source is wrong with what was set?
- How to check if the frequency command source is wrong with what was set?

A

### Frequency input source monitor [d062]

- Displays the currently enabled frequency command source.

!
- The frequency command source varies depending on the status of the input terminal function and other functions as well as the setting of "frequency reference selection [A001][*1]". For details, refer to "9.2 Selecting Frequency Command".

| Code | Item | Description | Data |
|---|---|---|---|
| [d062] | Frequency input source monitor | Keypad (Multi-speed 0) | 00 |
| | | Multi-speed 1 to 15 | 01 to 15 |
| | | Jogging | 16 |
| | | Modbus communication | 18 |
| | | Option | 19 |
| | | External POT | 21 |
| | | Pulse input | 22 |
| | | Calculation function result | 23 |
| | | EzSQ | 24 |
| | | [Ai1] terminal (analog voltage) input | 25 |
| | | [Ai2] terminal (analog current) input | 26 |
| | | [Ai1] terminal input + [Ai2] terminal input | 27 |

A

### RUN command input source monitor [d063]

- Displays the currently enabled RUN command source.

!
- The RUN command source varies depending on the status of the input terminal function and other functions as well as the setting of "RUN command input source selection [A002][*1]". Refer to "9.1 Selecting RUN Command and Alarm Reset" for more information.

| Code | Item | Description | Data |
|---|---|---|---|
| [d063] | RUN command input source monitor | Control terminal | 01 |
| | | Keypad (RUN-key) | 02 |
| | | Modbus communication | 03 |
| | | Option | 04 |

*1. "2nd-motor control [SET]" target parameter. The second control parameter is also subject to setting.

## 10.3.6 Monitor Two Types of Data on a Single Monitor Screen

Q

- How to easily monitor two types of data on a single monitor screen?

A

### Dual monitor [d050]

- Two monitor items can be set and the display can be switched by turning the JOG dial left/right.
- Set the function codes to be monitored to [b160] and [b161].

!

- Even if "Output frequency monitor [d001]" or "Output frequency scale conversion monitor [d007]" is set to [b160]/[b161] and "Enable frequency changes through monitor display [b163]" is set to "Enable (01)", frequency reference cannot be changed from [d050].

| Code | Item | Description | Data |
|---|---|---|---|
| [d050] | Dual monitor | Monitors the two items set in [b160] and [b161]. | — |
| [b160] | Dual monitor parameter 1 | 001 to 030 correspond to [d001] to [d030]. | 001 to 030 |
| [b161] | Dual monitor parameter 2 | 001 to 030 correspond to [d001] to [d030]. | 001 to 030 |

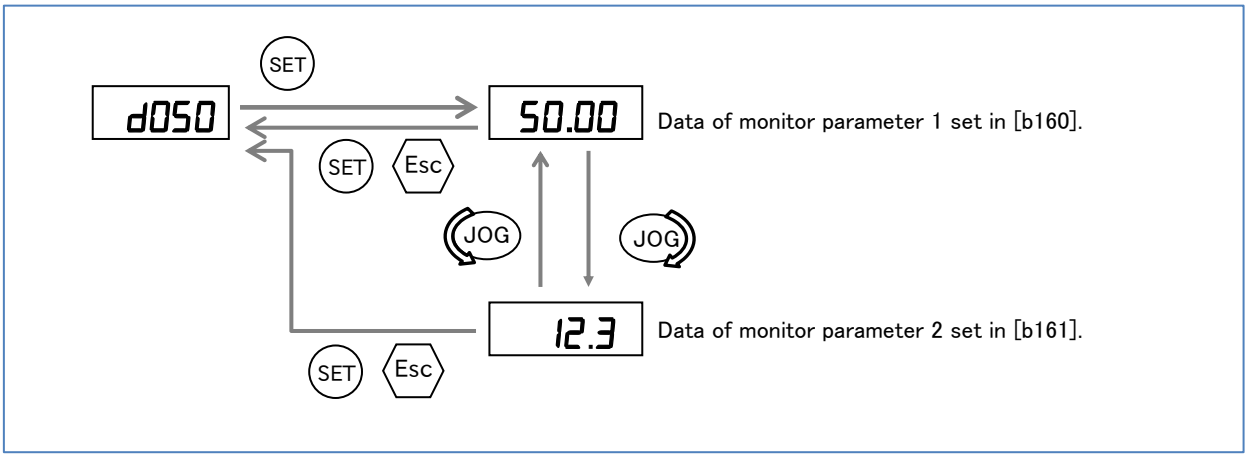

# 10.4 Check EzSQ Function/PID Function Related Data

## 10.4.1 Monitor EzSQ Function Related Data

Q

- How to check EzSQ related data?

A

### EzSQ related monitors [d023] to [d027]

- The following EzSQ related data can be monitored. For more information, see "Chapter 12 ProDriveNext/EzSQ".

| Code | Item | Description | Data |
|---|---|---|---|
| [d023] | Program counter | Displays the line number that is being executed during EzSQ function operation. | 0 to 1024 |
| [d024] | Program No. monitor | Displays the downloaded program number. | 0 to 9999 |
| [d025] | User monitor-0 | Displays the data output to Umon(00) to Umon(02) in the program. | -2147483647 to 2147483647 |
| [d026] | User monitor-1 | | |
| [d027] | User monitor-2 | | |

## 10.4.2 Monitor PID Function Related Data

Q

- How to check the PID function related data?

A

### PID related monitors [d004], [d153], [d155]

- The following PID related data can be monitored. For details, see "9.8 Driving by PID Process Control".

| Code | Item | Description | Data |
|---|---|---|---|
| [d004] | PID feedback value monitor | Displays the value obtained by multiplying the PID feedback data by the scale value of [A075]. | 0.00 to 9999.00 (%) |
| [d153] | PID deviation monitor | Displays the value obtained by multiplying the PID deviation value by the scale value of [A075]. | -9999.00 to 9999.00 (%) |
| [d155] | PID output monitor | Displays the PID output value after the limiter as a percentage obtained by assuming the maximum frequency as 100%. | -100.00 to 100.00 (%) |

# 10.5 Check Trip and Warning Related Information

## 10.5.1 Monitor the Number of Trips and Trip History

**Q**

- How to check the number of times the inverter has tripped?
- How to check the information when errors occurred?

**A**

### Trip count monitor [d080]

- Displays the number of times the inverter has tripped.
- This data is stored in the internal memory of the inverter when the power is shut off.

| Code | Item | Description | Data |
|---|---|---|---|
| [d080] | Trip count monitor | Displays the number of times the inverter has tripped. This data is stored in the internal memory when the power is shut off. | 0 to 65535 (times) |

**A**

### Trip monitor 1 to 6 ([d081] to [d086])

- The trip history data up to the past 6 times is displayed.
- This data is stored in the internal memory of the inverter when the power is shut off.
- The latest trip information can be monitored in "Trip monitor 1 [d081]".

**!**

- Refer to "15.2.1 Checking trip information" for details about what is displayed in "Trip monitor 1 to 6 ([d081] to [d086])".

| Code | Item | Description | Data |
|---|---|---|---|
| [d081] to [d086] | Trip monitor 1 to Trip monitor 6 | Displays the following information when the inverter trips.<br>(1) trip factor, (2) output frequency, (3) output current, (4) DC bus voltage, (5) accumulated RUN time, (6) accumulated power-on time<br>This data is stored in the internal memory when the power is shut off. | — |

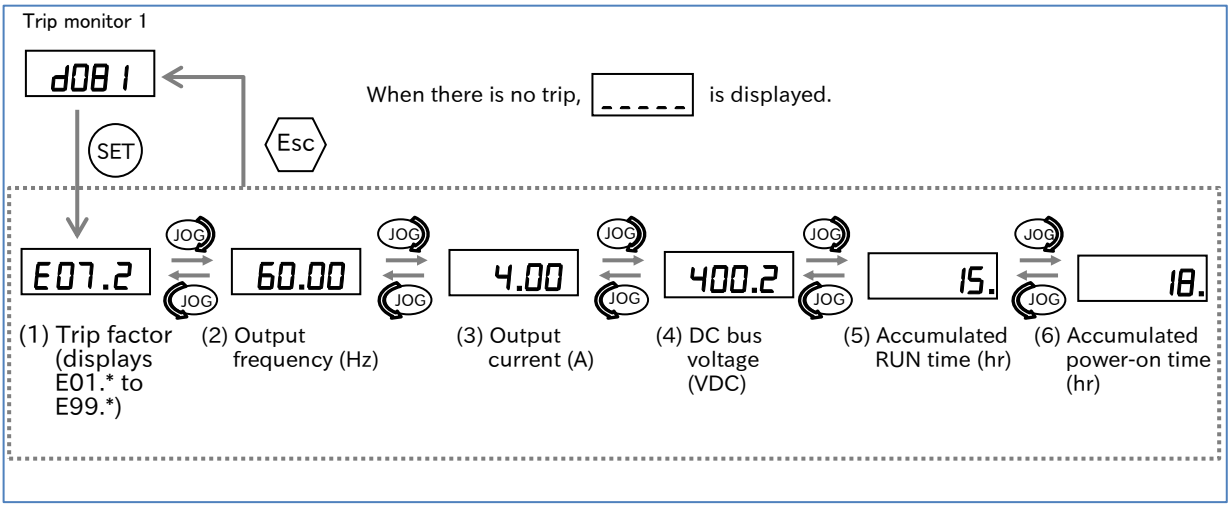

## 10.5.2 Monitor Warning Information

Q

- How to check the detailed information when a warning occurs?

A

### Warning monitor [d090]

- A warning is displayed if the set parameter is inconsistent with other settings.
- During a warning, "PRG LED" on the keypad blinks until the data is corrected.

!

- For details on the display of warnings, see "15.3.1 Warning Display".

| Code | Item | Description | Data |
|---|---|---|---|
| [d090] | Warning monitor | A warning is displayed if the set parameter is inconsistent with other settings. | — |

11

# Chapter 11 RS485 Communication

WJ-C1 supports Modbus-RTU communication using the physical layer as RS-485. This chapter describes the communication methods that can be used for RS-485 communication.
In addition, Hitachi's original inter-inverter communication function (EzCOM) using Modbus protocol can also be used. Select the communication function you want to use and set it.
Before conducting a test run, please read "Chapter 1 Safety Instructions/Risks" carefully and pay attention to safety.


**11.1 Modbus-RTU ..... 11-1-1**
- 11.1.1 Communication Specifications and Setting Parameters ..... 11-1-1
- 11.1.2 Communication Wiring and Connection ..... 11-1-3
- 11.1.3 Communication Process ..... 11-1-4
- 11.1.4 Message Configuration ..... 11-1-5

**11.2 Explanation of Modbus-RTU Function Codes ..... 11-2-1**
- 11.2.1 Read Coil Status [01h] ..... 11-2-1
- 11.2.2 Read Holding Registers [03h] ..... 11-2-3
- 11.2.3 Write Coil [05h] ..... 11-2-4
- 11.2.4 Write Holding Registers [06h] ..... 11-2-6
- 11.2.5 Loop-back Test [08h] ..... 11-2-7
- 11.2.6 Write Multiple Coils [0Fh] ..... 11-2-8
- 11.2.7 Write Multiple Holding Registers [10h] ..... 11-2-9
- 11.2.8 Read/Write Multiple Holding Registers [17h] ..... 11-2-10
- 11.2.9 Exceptional Responses ..... 11-2-11
- 11.2.10 Storing Changes to Holding Registers ..... 11-2-12
- 11.2.11 Endian Selection of Holding Registers ..... 11-2-14

**11.3 Modbus Mapping Function ..... 11-3-1**
- 11.3.1 Setting Modbus Mapping Function ..... 11-3-1

**11.4 Inter-inverter Communication Function EzCOM ..... 11-4-1**
- 11.4.1 What is EzCOM? ..... 11-4-1
- 11.4.2 Setting EzCOM ..... 11-4-2

# 11.1 Modbus-RTU

## 11.1.1 Communication Specifications and Setting Parameters

Q

- What are the specifications of Modbus communication function?

A

- WJ-C1 inverters are equipped with RS-485 compliant Modbus-RTU port. They can communicate with external control equipment devices. The basic specifications and setting parameters for Modbus communication are as follows.

!

- When communication option board is installed, Modbus communication function of the main unit cannot be used.
- In Modbus communication of WJ-C1, there are data with restrictions when accessing as "2 register length parameter" for large data that does not fit in 1 word. For details, refer to "Exception code 27h" in "11.2.9 Exceptional Responses".

| Item | Specifications | Remarks |
|---|---|---|
| Protocol | Modbus-RTU (Slaves) | |
| Baud rate | 2400/4800/9600/19.2k/38.4k/57.6k/76.8k/115.2k bps | Set with parameter |
| Communication method | Half-duplex communication method | |
| Synchronous method | Asynchronous method | |
| Transmission code | Binary | |
| Transmission method | Transmission from the lower bit (LSB first) | |
| Applicable | RS-485 | |
| Data bit length | 8 bits | |
| Parity | None/Even/Odd | Set with parameter |
| Stop bit length | 1 bit/2 bits | Set with parameter |
| Start mode | Half side start method by command from Host-Side Commands | |
| Waiting time | Silent interval + 0 to 1000 (ms) | Set with parameter |
| Connection type | 1: N (N = Max. 247)<br>(Up to 32 units can be connected without repeaters (including master)) | Set with parameter |
| Error checking | Overrun/ Framing/ CRC-16/ Longitudinal parity | |

| Code | Item | Description | Data |
|---|---|---|---|
| [A001] | Frequency source selection | Set for Modbus communication | 03 |
| [A002] | RUN command input source selection | Set for Modbus communication | 03 |
| [C021]<br>[C022]<br>[C026] | Output terminal function | Communication line disconnection [NDc]:<br>This signal turns ON when a communication error occurs. | 32 |
| [C071] | RS485 communication baud rate selection | Set the baud rate from the following.<br>03(2400bps)/04(4800bps)/05(9600bps)/06(19.2kbps)/07(38.4kbps)/08(57.6kbps)/09(76.8kbps)/10(115.2kbps) | 03 to 10 |
| [C072] | RS485 communication node address | Assign the node address of the inverter. | 1 to 247 |
| [C074] | RS485 communication parity selection | No parity | 00 |
| | | Even parity | 01 |
| | | Odd parity | 02 |
| [C075] | RS485 communication stop bit selection | 1 bit | 01 |
| | | 2 bits | 02 |

| Code | Item | Description | Data |
|---|---|---|---|
| [C076] | RS485 communication error selection | Trips with "RS-485 communication error [E41]" at communication error. | 00 |
| | | Trips with "RS-485 communication error [E41]" at communication error after deceleration stop. | 01 |
| | | Ignores communication error. Trip does not occur. | 02 |
| | | Stops with free run stop at communication error. Trip does not occur. | 03 |
| | | Stops with deceleration stop at communication error. Trip does not occur. | 04 |
| [C077] | RS485 communication timeout | When communication is interrupted and this set time has elapsed, the motor trips due to "RS-485 communication error [E41]". When this parameter is set to 0.00, timeout judgment is not performed. | 0.00, 0.01 to 99.99 (s) |
| [C078] | RS485 communication wait time | Sets the wait time until the inverter response. | 0 to 1000 (ms) |
| [C096] | RS485 communication mode selection | Use Modbus-RTU | 00 |
| | | Use Inter-inverter communication (EzCOM) | 01 |
| | | Use Inter-inverter communication (EzCOM) (Administrator inverter) | 02 |
| [C098] | EzCOM start node No. | Parameters related to inter-inverter communication function (EzCOM). For details, refer to "11.4 Inter-inverter Communication Function EzCOM". | 1 to 8 |
| [C099] | EzCOM end node No. | | 1 to 8 |
| [C100] | EzCOM start method selection | | 00, 01 |
| [P140] to [P155] | EzCOM related parameters | | - |
| [P200] | Resister mapping selection | Parameters related to Modbus mapping function. For details, refer to "11.3 Modbus Mapping Function". | 00, 01 |
| [P201] to [P210] | External register 1 to 10 | | 0000h to FFFFh |
| [P211] to [P220] | External register 1 to 10 format | | 00, 01 |
| [P221] to [P230] | External register 1 to 10 scaling | | 0.001 to 65.535 |
| [P301] to [P310] | Internal register 1 to 10 | | 0000h to FFFFh |
| [P400] | Endian selection | Big endian | 00 |
| | | Little Endian | 01 |
| | | Special Endian | 02 |

## 11.1.2 Communication Wiring and Connection

A

- The figure below shows an example of wiring for RS-485 communication. When multiple inverters are connected, each inverter is connected in parallel.
- For the communication cable, use a twisted pair cable for communication and a 3-wire shielded cable for ground connection. Connect the signal ground (SG) of the external control equipment to the [L] terminal of the inverter.
- Install a termination resistor that matches the characteristic impedance of the cable at both ends of the communication cable. When WJ-C1 is connected at end communication line, turn on the termination resistor switch. When performing RS-485 communication with a single inverter, turn on the termination resistor switch of that inverter. (The built-in termination resistor of WJ-C1 is 120 Ω.)

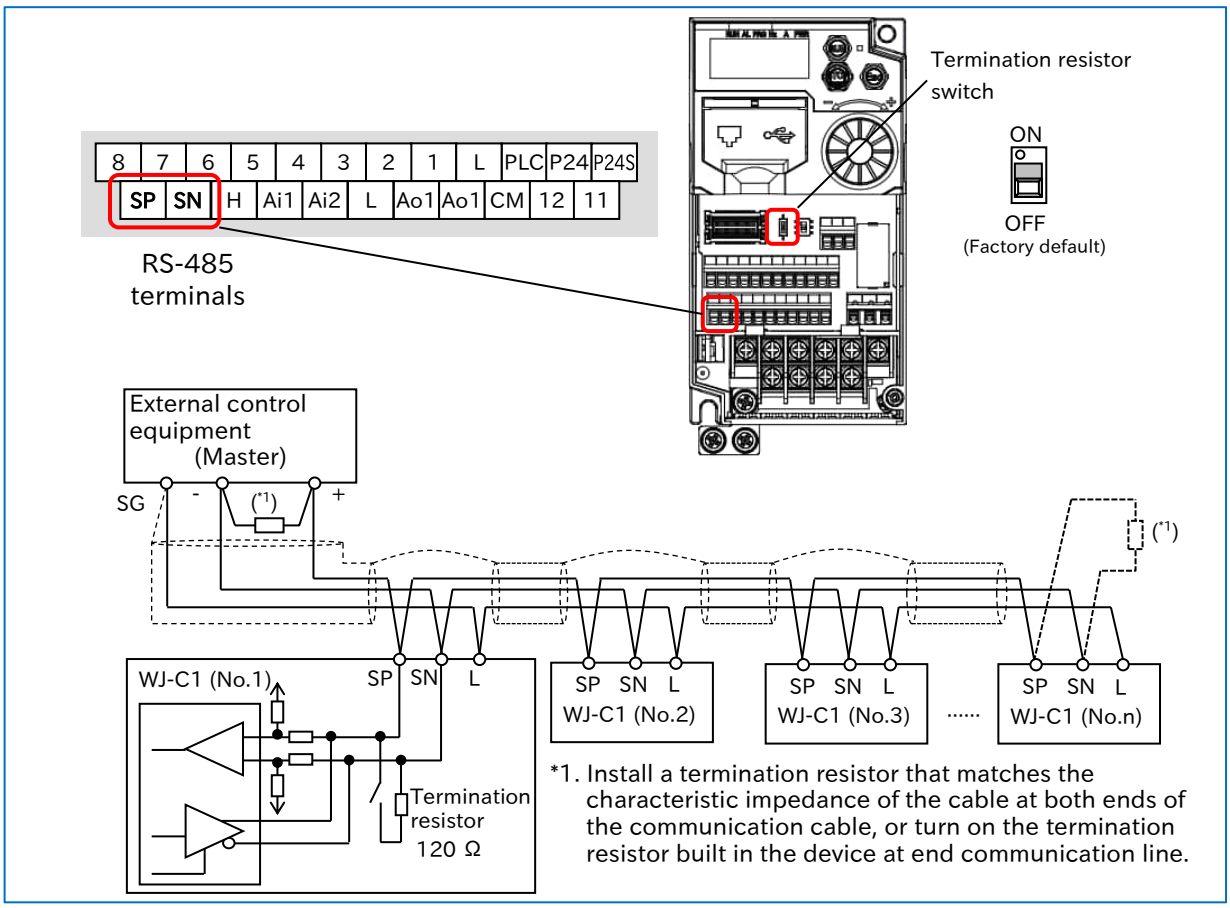


!

- Communication is possible only with a 2-core twisted pair cable, but it is not recommended because communication may become unstable due to noise.
- Communication cables should be separated from high voltage circuits such as power lines and alarm relay wiring, and should not be laid in parallel.
- Communication may become unstable depending on the operating environment of the inverter, the cables used for communication lines, and the wiring conditions. In this case, perform the following.
  - Check whether the termination resistor is connected to both ends of the communication cable. Or use a termination resistor that matches the characteristic impedance of the cable.
  - Check the connection between the signal ground (SG) of the external control equipment (master) and [L] terminal of each inverter.
  - Normally, the shield of the wire should be grounded at one point to the SG of the external control equipment. Or, change the grounding method of the shield while checking that the communication is stable. (For example, ground to the L terminal of any inverter, do not perform shield grounding, etc.)
  - If the communication distance is long (100 m or more), reduce the baud rate or insert a repeater.

## 11.1.3 Communication Process

### Communication process

- Modbus-RTU communication between the external control equipment and the inverter is performed by the following process.

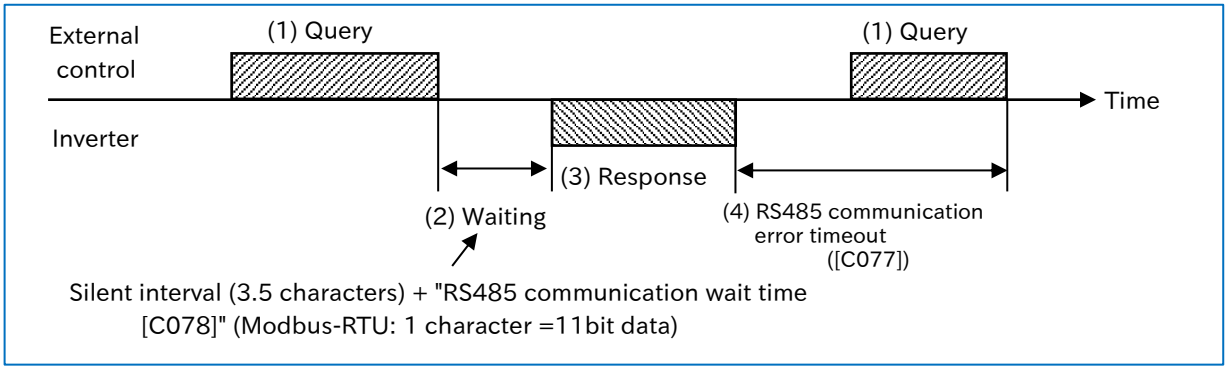


(1) A query message is sent from the external control equipment to the inverter.
(2) The inverter waits for the silent interval time and the set time of "RS485 communication wait time [C078]" after receiving the query message. (The silent interval is a wait time determined by Modbus-RTU communication and is 3.5 characters long. For Modbus-RTU communication, 1 character = 11bit data.)
(3) A response message is returned from the inverter to the external control equipment.
(4) After sending the response message, the inverter waits for the completion of receiving the next query message for the set time of "RS485 communication timeout [C077]". (If [C077] is 0.00, timeout judgment is not performed.) When a query message is received, the inverter performs processing according to the message, and then the operation in (2) is performed. When the timeout occurs, the inverter waits for a query message to be received and operations according to the setting of "RS485 communication error selection [C076]".

- The communication timeout monitoring starts after the first transmission or reception is established after the power is turned on or reset. If transmission/reception is not established at least once, a communication timeout does not occur.

## 11.1.4 Message Configuration

A

- The command message sent from the master to the slave is called "Query", and the response message from the slave is called "Response". The transmission format of "Query" and "Response" is shown below.

| Query |
|---|
| Slave address |
| Function code |
| Query data |
| Error checking (CRC-16) |

| Response |
|---|
| Slave address for checking |
| Function code for checking |
| Response data |
| Error checking (CRC-16) |

### (1) Slave address (communication node address)

- The slave address is a number in the range of 1 to 247 set in advance for each inverter (slave). (The query is fetched only by the inverter that matches the slave address of the query.)
- If "0" is specified as the slave address of the destination on the master side, broadcast to all stations can be performed. For broadcast, all slaves receive data, but do not return a response.
- During broadcast, data cannot be read or looped back.
- In Modbus specification, the slave address is 1 to 247. However, if slave addresses 250 to 254 are used on the master side, broadcasting can be performed only for a specific slave address. (Slaves do not respond, and broadcast is valid only for write commands (05h, 06h, 0Fh, 10h).)

| Slave address | Destination |
|---|---|
| 250 (FAh) | Broadcast to slave addresses 01 to 09 |
| 251 (FBh) | Broadcast to slave addresses 10 to 19 |
| 252 (FCh) | Broadcast to slave addresses 20 to 29 |
| 253 (FDh) | Broadcast to slave addresses 30 to 39 |
| 254 (FEh) | Broadcast to slave addresses 40 to 247 |

### (2) Function code

- The function executed by the inverter is specified by the function code.
- The corresponding function code is shown below.

| Function code | Function | Max. data bytes handled by 1 massage | Max. number of data handled by 1 message |
|---|---|---|---|
| 01h | Read coil status | 4 | 32 coils (in bits) |
| 03h | Read multiple registers | 32 | 16 registers (in bytes) |
| 05h | Write coil | 2 | 1 coil (in bits) |
| 06h | Write holding registers | 2 | 1 register (in bytes) |
| 08h | Loop-back Test | - | - |
| 0Fh | Write multiple coils | 4 | 32 coils (in bits) |
| 10h | Write multiple registers | 32 | 16 registers (in bytes) |
| 17h | Read/write multiple holding registers | 32/32 | 16/16 registers (in bytes) |

## (3) Data

- Send data related to the function code.
- The data transmission format varies depending on the function code.
- Among the data used in Modbus communication, the following data formats are supported.

| Data name | Description |
|---|---|
| Coil | Readable/writable binary data (1-bit length) |
| Holding register | Readable/writable 16-bit length data |

- Modbus communication of WJ-C1 has restrictions on writing to "2 register length parameter". For details, refer to "Exception code 27h" in "11.2.9 Exceptional Responses".

## (4) Error checking

- CRCs (Cyclic Redundancy Check) are used for error checking of Modbus-RTU.
- The generation polynomial of CRC-16($X^{16}+X^{15}+X^{2}+1$) is used to generate the CRC code.
- The CRC code is 16-bit data generated for a block of arbitrary data length in 8-bit units.

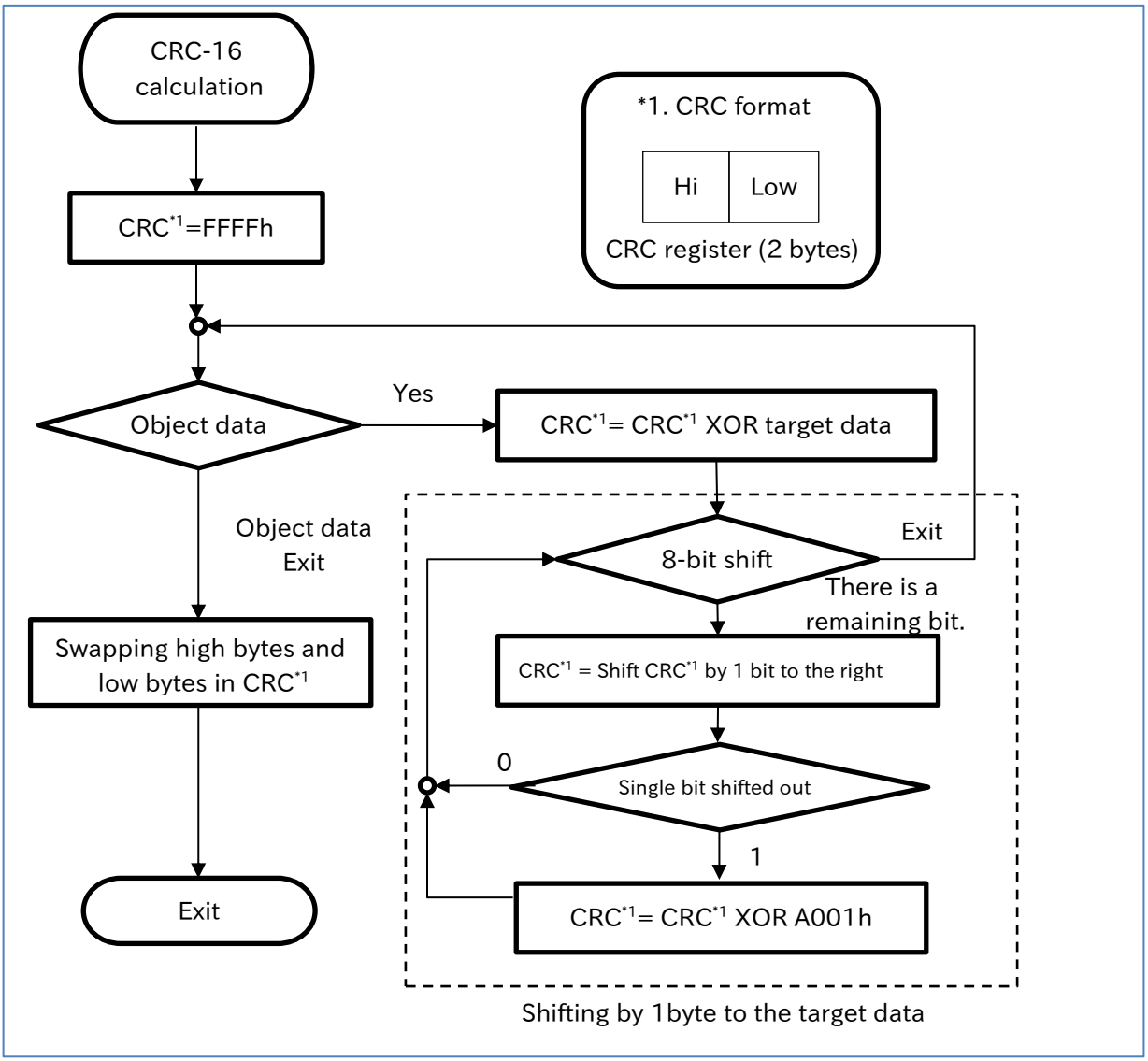

## (5) Communication time required

- The response of the inverter after the inverter receives a query is as follows: "Silent interval (3.5 characters)" + "Communication wait time [C078]" + "Processing time such as response message creation (several msec)".
- After the external control equipment receives a response from the inverter, be sure to leave an interval of at least the silent interval (3.5 characters) between sending the next query.

## (6) Normal response

- Returns the response according to the per-query formats described in "11.2 Explanation of Modbus-RTU Function Codes".

## (7) Abnormal response

- If there is a fault (excluding communication error) in the contents of the query, the inverter returns an exceptional response without executing anything.
- To determine the error, check the function code of the response. The function code of the exceptional response is the value added by 80h to the function code of the query.
- For error details, see section "11.2.9 Exceptional Responses".

Exceptional Response Field Configuration

| |
|---|
| Slave address |
| Function code |
| Exception code |
| CRC-16 |

## (8) No response

- In the following cases, the inverter ignores the query and returns no response.
- A broadcast (a query with a slave address "0") is received.
- A communication error is detected during query reception.
- The slave address of the query does not match the inverter setting slave address.
- The time interval between the data composing the message is 3.5 characters or less.
- The query data length is invalid.
- The frame reception interval exceeds 1.5 characters.
- The error check code of the query does not match (CRC error).
- A group-wide broadcast (a query with a slave address between 250 and 254) is received.

- In the external control equipment, provide a timer to monitor the response message from the inverter. If no response message is returned within a specific time, provide retransmission processing or error processing, such as sending the same query again.

# 11.2 Explanation of Modbus-RTU Function Codes

## 11.2.1 Read Coil Status [01h]

Q

- How to read multiple coil statuses on Modbus communication?

A

- Reads the coil status (ON/OFF).
- An example of read the state of input terminals 1 to 7 of the inverter at slave address 1 is shown below. The status of input terminals 1 to 7 are as follows.

| Input terminal No. | 1 | 2 | 3 | 4 | 5 | 6 | 7 |
|---|---|---|---|---|---|---|---|
| Coil No. | 0007h | 0008h | 0009h | 000Ah | 000Bh | 000Ch | 000Dh |
| Terminal state | ON | OFF | ON | OFF | OFF | OFF | ON |

Query

| No. | Field name | Example (HEX) |
|---|---|---|
| 1 | Slave address*1 | 01 |
| 2 | Function code | 01 |
| 3 | Coil start No. (High)*2 | 00 |
| 4 | Coil start No. (Low)*2 | 06 |
| 5 | Number of coils (High)*3 | 00 |
| 6 | Number of coils (Low)*3 | 07 |
| 7 | CRC-16 (High) | 9D |
| 8 | CRC-16 (Low) | C9 |

Coil start No. = (Coil No.) - 1

Response

| No. | Field name | Example (HEX) |
|---|---|---|
| 1 | Slave address | 01 |
| 2 | Function code | 01 |
| 3 | Number of data bytes | 01 |
| 4 | Coil data*4 | 45 |
| 5 | CRC-16 (High) | 90 |
| 6 | CRC-16 (Low) | 7B |

Input terminal 7
Input terminal 3
Input terminal 1
45h = 0100 0101

*1. Broadcasting is disabled.
*2. Note that the starting number is 1 less than the actual register number. Specify a number of "(Register No.) - 1".
*3. If the number of read coils exceeds 0 or 32, an exceptional response of exception code "03 h" is returned.
*4. Data of the number of data bytes is transferred.

!

- The coil data for the response is from coil number 0007h to 000Dh with coil 0007h as LSBs (0bit). If the coil data is not in 1byte (8-bit) units, the higher order bit is extended with zeros to 1byte (8-bit) units.

| | Bit7 | Bit6 | Bit5 | Bit4 | Bit3 | Bit2 | Bit1 | Bit0 |
|---|---|---|---|---|---|---|---|---|
| Coil No. | 000Eh | 000Dh | 000Ch | 000Bh | 000Ah | 0009h | 0008h | 0007h |
| Coil state | OFF | ON | OFF | OFF | OFF | ON | OFF | ON |
| 45h | 0 | 1 | 0 | 0 | 0 | 1 | 0 | 1 |

- When reading the status of 16 consecutive coils from coil number 0001h, the order of the data is as follows. Data 1 is byte data transmitted first.

| | Bit7 | Bit6 | Bit5 | Bit4 | Bit3 | Bit2 | Bit1 | Bit0 |
|---|---|---|---|---|---|---|---|---|
| Data 1 | 0008h | 0007h | 0006h | 0005h | 0004h | 0003h | 0002h | 0001h |
| Data 2 | 0010h | 000Fh | 000Eh | 000Dh | 000Ch | 000Bh | 000Ah | 0009h |

- If the read coil extends beyond the range of the defined coil number, coil data outside the range is sent as "0".
- If the command cannot be executed successfully, an exceptional response is returned. For details, refer to "11.2.9 Exceptional Responses".
- Reads coil numbers 0010h to 0058h can also be substituted by holding register reads register number 1E01h to 1E05h. As an example, the bit-structure of the holding register 1E01h is shown below. For details, refer to "18.1.1 List of Modbus Coil Numbers".

## (Example) Bit-structure of holding register 1 E 01 h (Holding register allocation status of coil number 0010h to 001Fh)

| bit | Symbol | Item | bit | Symbol | Item |
|---|---|---|---|---|---|
| 15 | ONT | Accumulated power-on time over | 7 | OD | Over deviation for PID control |
| 14 | RNT | Accumulated operation time over | 6 | OL | Overload warning notice |
| 13 | TRQ | Torque limited | 5 | FA2 | Set frequency overreached |
| 12 | UV | Undervoltage | 4 | FA1 | Constant-frequancy reached |
| 11 | - | - | 3 | RUN | Running |
| 10 | OTQ | Over-torque/under-torque | 2 | - | - |
| 9 | FA3 | Set frequency reached | 1 | IRDY | Inverter ready |
| 8 | AL | Alarm | 0 | Dir | Rotation direction (0: Forward/1: Reverse) |

## 11.2.2 Read Holding Registers [03h]

**Q**

- How to read multiple holding register data on Modbus communication?

**A**

- Reads the specified number of consecutive holding registers from the specified holding register number.
- Examples of readings of the latest trip information (holding register number =0012h to 0017h) from the inverter at slave address 1 are shown below.

Query

| No. | Field name | Example (HEX) | |
|---|---|---|---|
| 1 | Slave address*1 | 01 | |
| 2 | Function code | 03 | |
| 3 | Register start No. (High)*2 | 00 | Register start No. = (Register No.)-1 |
| 4 | Register start No. (Low)*2 | 11 | |
| 5 | Number of holding registers (High)*3 | 00 | 6 registers |
| 6 | Number of holding registers (Low)*3 | 06 | |
| 7 | CRC-16 (High) | 95 | |
| 8 | CRC-16 (Low) | CD | |

Response

| No. | Field name | Example (HEX) | |
|---|---|---|---|
| 1 | Slave address | 01 | |
| 2 | Function code | 03 | |
| 3 | Number of data bytes*4 | 0C | |
| 4 | Register data 1 (High) | 00 | 0003h → 03d → E03 (Trip factor = Overcurrent) |
| 5 | Register data 1 (Low) | 03 | |
| 6 | Register data 2 (High) | 00 | 0004h → 4 (Inverter status = during acceleration). |
| 7 | Register data 2 (Low) | 04 | |
| 8 | Register data 3 (High) | 00 | 0000 04D2h → 1234d → 12.34 (Hz) (Frequency) |
| 9 | Register data 3 (Low) | 00 | |
| 10 | Register data 4 (High) | 04 | |
| 11 | Register data 4 (Low) | D2 | |
| 12 | Register data 5 (High) | 00 | 001Eh → 30d → 3.0 (A) (Output current) |
| 13 | Register data 5 (Low) | 1E | |
| 14 | Register data 6 (High) | 01 | 011Ch → 284d → 284 (VDC) (DC bus Voltage) |
| 15 | Register data 6 (Low) | 1C | |
| 16 | CRC-16 (High) | 77 | |
| 17 | CRC-16 (Low) | 3D | |

"h" = Hexadecimal "d" = Decimal

*1. Broadcasting is disabled.
*2. Note that the starting number is 1 less than the actual register number. Specify a number of "(Register No.) - 1".
*3. The maximum number of data that can be read is 16 registers (32 bytes). If it is exceeded, an exceptional response of exception code "03h" is returned.
*4. Data of the number of data bytes is transferred. In this example, it is 12 bytes because of the six holding registers.

**!**

- If the command cannot be executed successfully, an exceptional response is returned. For details, refer to "11.2.9 Exceptional Responses".

## 11.2.3 Write Coil [05h]

Q

- How to write single coil status on Modbus communication?

A

- Write single coil. The coil status change is shown in the table below.

| Data | Coil: OFF to ON | Coil: ON to OFF |
|---|---|---|
| Change data (High) | FFh | 00h |
| Change data (Low) | 00h | 00h |

- The following shows an example of RUN command for slave-address 1 inverter.
- In order to operate with a command from Modbus communication, "RUN command input source selection, 1st-motor [A002]" must be set to "Modbus communication (03)" in advance. The coil number for RUN command is 0001h.

Query

| No. | Field name | Example (HEX) | |
|---|---|---|---|
| 1 | Slave address*1 | 01 | |
| 2 | Function code | 05 | |
| 3 | Coil address (High) *2 | 00 | Coil start No. = (Coil No.) - 1 |
| 4 | Coil address (Low) *2 | 00 | |
| 5 | Change data (High) | FF | OFF to ON:FF00h |
| 6 | Change data (Low) | 00 | |
| 7 | CRC-16 (High) | 8C | |
| 8 | CRC-16 (Low) | 3A | |

Response

| No. | Field name | Example (HEX) |
|---|---|---|
| 1 | Slave address*1 | 01 |
| 2 | Function code | 05 |
| 3 | Coil address (High) *2 | 00 |
| 4 | Coil address (Low) *2 | 00 |
| 5 | Change data (High) | FF |
| 6 | Change data (Low) | 00 |
| 7 | CRC-16 (High) | 8C |
| 8 | CRC-16 (Low) | 3A |

*1. For broadcast, there is no response.
*2. Note that the starting number is 1 less than the actual register number. Specify a number of "(Register No.) - 1".

- If the command cannot be executed successfully, an exceptional response is returned. For details, refer to "11.2.9 Exceptional Responses".
- The writing to the coil numbers 0001h to 000Fh can also be substituted in the holding register to the register number 1F01h. As an example, the bit-structure of the holding register 1F01h is shown below. For details, refer to "18.1.1 List of Modbus Coil Numbers".

| bit | Symbol | Item | bit | Symbol | Item |
|---|---|---|---|---|---|
| 15 | - | - | 7 | IN1 | Input terminal 1 function (0:OFF/1:ON) |
| 14 | - | - | 6 | - | - |
| 13 | IN7 | Input terminal 7 function (0:OFF/1:ON) | 5 | - | - |
| 12 | IN6 | Input terminal 6 function (0:OFF/1:ON) | 4 | RS | Reset |
| 11 | IN5 | Input terminal 5 function (0:OFF/1:ON) | 3 | EXT | External fault |
| 10 | IN4 | Input terminal 4 function (0:OFF/1:ON) | 2 | - | Rotation direction (0: Forward/1: Reverse) |
| 9 | IN3 | Input terminal 3 function (0:OFF/1:ON) | 1 | - | RUN command (0: Stop/1: Run) |
| 8 | IN2 | Input terminal 2 function (0:OFF/1:ON) | 0 | - | - |

## 11.2.4 Write Holding Registers [06h]

Q

- How to write single holding register data on Modbus communication?

A

- Writes data to one specified holding register.
- The following shows how to write 50.00 Hz to "Output frequency setting or monitor [F001]" of the inverter with slave address 1.
- The holding register of [F001] has a data resolution of 0.01 Hz, so to set 50.00 Hz, the written data will be "5000 (1388h)".

Query

| No. | Field name | Example (HEX) |
|---|---|---|
| 1 | Slave address*1 | 01 |
| 2 | Function code | 06 |
| 3 | Register address (High)*2 | 00 |
| 4 | Register address (Low)*2 | 01 |
| 5 | Change data (High) | 13 |
| 6 | Change data (Low) | 88 |
| 7 | CRC-16 (High) | D5 |
| 8 | CRC-16 (Low) | 5C |

Register start No. = (Register No.) - 1

1388h = 5000d → 50.00 (Hz)

Response

| No. | Field name | Example (HEX) |
|---|---|---|
| 1 | Slave address*1 | 01 |
| 2 | Function code | 06 |
| 3 | Register address (High)*2 | 00 |
| 4 | Register address (Low)*2 | 01 |
| 5 | Change data (High) | 13 |
| 6 | Change data (Low) | 88 |
| 7 | CRC-16 (High) | D5 |
| 8 | CRC-16 (Low) | 5C |

*1. For broadcast, there is no response.
*2. Note that the starting number is 1 less than the actual register number. Specify a number of "(Register No.) - 1".

!

- [F001] is a "2 register length parameter" composed of holding register numbers (0001h, 0002h), but only 1 register is written in the above sample because 50.00 Hz (5000) falls within the range of the lower register. To set a frequency exceeding 655.35Hz, write two registers at the same time with the write multiple holding registers [10h]. For details of "2 register length parameters", refer to exceptional code "27h" in "11.2.9 Exceptional Responses".
- For parameters other than [F001], even if the data is rewritten in Modbus communication while the data part is displayed in Keypad, the display does not change. When you return to the function code display and display the data again, the reflected value is displayed.
- If the command cannot be executed successfully, an exceptional response is returned. For details, refer to "11.2.9 Exceptional Responses".

## 11.2.5 Loop-back Test [08h]

Q

- How to check whether devices can be sent and received on Modbus communication normally?

A

- Used to check communication between master and slave. The test data can be any value.
- An example of a loopback test to an inverter with slave address 1 is shown below.

Query

| No. | Field name | Example (HEX) |
|---|---|---|
| 1 | Slave address*1 | 01 |
| 2 | Function code | 08 |
| 3 | Test subcode (High) | 00 |
| 4 | Test subcode (Low) | 00 |
| 5 | Data (High) | Any value |
| 6 | Data (Low) | Any value |
| 7 | CRC-16 (High) | CRC |
| 8 | CRC-16 (Low) | CRC |

Response

| No. | Field name | Example (HEX) |
|---|---|---|
| 1 | Slave address*1 | 01 |
| 2 | Function code | 08 |
| 3 | Test subcode (High) | 00 |
| 4 | Test subcode (Low) | 00 |
| 5 | Data (High) | Any value |
| 6 | Data (Low) | Any value |
| 7 | CRC-16 (High) | CRC |
| 8 | CRC-16 (Low) | CRC |

*1. For broadcast, there is no response.

!

- The test subcode only supports echoing query data (00h, 00h). Other commands are not supported.

## 11.2.6 Write Multiple Coils [0Fh]

**Q**

- How to write multiple coil statuses on Modbus communication?

**A**

- Function code [0Fh] rewrites multiple consecutive coils.
- An example of changing the state of RUN command and input terminals of the inverter with slave address 1 is shown below. For coil numbers, refer to "18.1.1 List of Modbus Coil Numbers".

| Coil No. | 0001h | 0002h | 0003h | 0004h | 0005h | 0006h | 0007h | 0008h |
|---|---|---|---|---|---|---|---|---|
| Terminal state | ON | OFF | OFF | OFF | OFF | OFF | ON | OFF |

| Coil No. | 0009h | 000Ah | 000Bh | 000Ch | 000Dh |
|---|---|---|---|---|---|
| Terminal state | OFF | ON | ON | OFF | ON |

Query

| No. | Field name | Example (HEX) |
|---|---|---|
| 1 | Slave address*1 | 01 |
| 2 | Function code | 0F |
| 3 | Coil start No. (High)*2 | 00 |
| 4 | Coil start No. (Low)*2 | 00 |
| 5 | Number of coils (High)*3 | 00 |
| 6 | Number of coils (Low)*3 | 0D |
| 7 | Number of data bytes*3 | 02 |
| 8 | Write data (High) *4*5 | 41 |
| 9 | Write data (Low) *4*5 | 16 |
| 10 | CRC-16 (High) | 55 |
| 11 | CRC-16 (Low) | D2 |

Coil start No. = (Coil No.) - 1

41h = 0100 0001
↑ ↑
0007h 0001h

16h = 0001 0110
↑ ↑
000Dh 0009h

Response

| No. | Field name | Example (HEX) |
|---|---|---|
| 1 | Slave address*1 | 01 |
| 2 | Function code | 0F |
| 3 | Coil start No. (High)*2 | 00 |
| 4 | Coil start No. (Low)*2 | 00 |
| 5 | Number of coils (High)*3 | 00 |
| 6 | Number of coils (Low)*3 | 0D |
| 7 | CRC-16 (High) | 94 |
| 8 | CRC-16 (Low) | 0E |

*1. For broadcast, there is no response.
*2. Note that the starting number is 1 less than the actual register number. Specify a number of "(Register No.) - 1".
*3. "The number of data bytes" is not the number of coils, but the number of bytes to be actually written. In addition, the write data range must not exceed 0001h to 000Dh . If it is exceeded, an exceptional response of exception code "23h" is returned.
*4. The above is an example when the number of data bytes is 2. The number of data bytes can be set to 1 or 2 bytes, but if it is 1 byte, the number of data bytes in No.7 can be set to 01 and the write data (Low) in No.9 can be omitted. As in the example above, set the write data (High) for each byte starting from the smallest coil number.
*5. Writes to coils with the item name (Reserved) will be ignored.

**!**

- Input terminal function is internally processed by "OR" of control terminal input and communication input. However, "Input terminal monitor [d005]" displays only control terminal state.
- If the command cannot be executed successfully, an exceptional response is returned. For details, refer to "11.2.9 Exceptional Responses".

## 11.2.7 Write Multiple Holding Registers [10h]

Q

- How to write multiple holding register data on Modbus communication?

A

- Write consecutive multiple holding register data.
- The following shows how to write 10.00 seconds to "Acceleration time 1 setting or monitor, 1st motor [F002]" of the inverter with slave address 1.
- Since the data resolution of the holding register of [F002] "1103h and 1104h" is 0.01 seconds, to set 10 seconds, set the write data to "1000 (0000 03E8h)".

Query

| No. | Field name | Example (HEX) |
|---|---|---|
| 1 | Slave address*1 | 01 |
| 2 | Function code | 10 |
| 3 | Register start No. (High)*2 | 11 |
| 4 | Register start No. (Low)*2 | 02 |
| 5 | Number of registers (High)*3 | 00 |
| 6 | Number of registers (Low)*3 | 02 |
| 7 | Number of data bytes*3 | 04 |
| 8 | Change data 1 (High) | 00 |
| 9 | Change data 1 (Low) | 00 |
| 10 | Change data 2 (High) | 03 |
| 11 | Change data 2 (Low) | E8 |
| 12 | CRC-16 (High) | B2 |
| 13 | CRC-16 (Low) | 98 |

Register start No. = (Register No.) - 1

0000 03E8h = 1000 d → 10.00 (sec)

Response

| No. | Field name | Example (HEX) |
|---|---|---|
| 1 | Slave address*1 | 01 |
| 2 | Function code | 10 |
| 3 | Register start No. (High)*2 | 11 |
| 4 | Register start No. (Low)*2 | 02 |
| 5 | Number of registers (High) | 00 |
| 6 | Number of registers (Low) | 02 |
| 7 | CRC-16 (High) | E5 |
| 8 | CRC-16 (Low) | 34 |

*1. For broadcast, there is no response.
*2. Note that the starting number is 1 less than the actual register number. Specify a number of "(Register No.) - 1".
*3. "The number of data bytes" is not the number of holding registers, but the number of bytes to be actually written. The maximum number of data that can be written is 16 registers (32 bytes). If it is exceeded, an exceptional response of exception code "03h" is returned.

!

- If the command cannot be executed successfully, an exceptional response is returned. For details, refer to "11.2.9 Exceptional Responses".
- Modbus communication of WJ-C1 has restrictions on writing to "2 register length parameter". For details, refer to "Exception code 27h" in "11.2.9 Exceptional Responses".

## 11.2.8 Read/Write Multiple Holding Registers [17h]

Q

- How to read and write multiple holding register data on Modbus communication?

A

- In succession write consecutive multiple holding register data.
- The following shows an example in which 50.00 Hz is written to "Output-frequency setting [F001]" of inverter at slave address 1 and "Output frequency monitor [d001]" is read.

Query

| No. | Field name | Example (HEX) | |
|---|---|---|---|
| 1 | Slave address*1 | 01 | |
| 2 | Function code | 17 | |
| 3 | Read register start No. (High) *2 | 10 | Register start No. = (Register No.) - 1 |
| 4 | Read register start No. (Low) *2 | 00 | |
| 5 | Number of read registers (High) *3 | 00 | |
| 6 | Number of read registers (Low) *3 | 02 | |
| 7 | Write register starting No. (High) *2 | 00 | Register start No. = (Register No.) - 1 |
| 8 | Write register starting No. (Low) *2 | 00 | |
| 9 | Number of write registers (High) *3 | 00 | |
| 10 | Number of write registers (Low) *3 | 02 | |
| 11 | Number of write data bytes | 04 | |
| 12 | Write data 1 (High) | 00 | 0000 1388h = 5000d → 50.00 (Hz) |
| 13 | Write data 1 (Low) | 00 | |
| 14 | Write data 2 (High) | 13 | |
| 15 | Write data 2 (Low) | 88 | |
| 16 | CRC-16 (High) | F4 | |
| 17 | CRC-16 (Low) | 86 | |

Response

| No. | Field name | Example (HEX) | |
|---|---|---|---|
| 1 | Slave address | 01 | |
| 2 | Function code | 17 | |
| 3 | Number of read data bytes *3 | 04 | |
| 4 | Read data 1 (High) | 00 | 0000 1388h = 5000d → 50.00 (Hz) |
| 5 | Read data 1 (Low) | 00 | |
| 6 | Read data 2 (High) | 13 | |
| 7 | Read data 2 (Low) | 88 | |
| 8 | CRC-16 (High) | F4 | |
| 9 | CRC-16 (Low) | 71 | |

*1. Broadcasting is disabled.
*2. Note that the starting number is 1 less than the actual register number. Specify a number of "(Register No.) - 1".
*3. "The number of data bytes" is not the number of holding registers, but the number of bytes to be actually written/read. The maximum number of data that can be written/read is 16 registers (32 bytes). If it is exceeded, an exceptional response of exception code "03h" is returned.

!

- If the command cannot be executed successfully, an exceptional response is returned. For details, refer to "11.2.9 Exceptional Responses".
- Modbus communication of WJ-C1 has restrictions on writing to "2 register length parameter". For details, refer to "Exception code 27h" in "11.2.9 Exceptional Responses".

## 11.2.9 Exceptional Responses

A

- If an error occurs in the query, an exceptional response is returned.
- For non-broadcast queries, the master is requesting a response. The inverter must return a response corresponding to the query, but if an error occurs in the query, it will return an exceptional response.
- The exceptional response has the field configuration shown in the table below.

Field Configuration

| |
|---|
| Slave address |
| Function code |
| Exception code |
| CRC-16 |

- Details of the field configuration are shown in the table below. The function code is the value added to the query by 80h in the exceptional response. The exception code indicates the cause of the exceptional response.

Function code

| Query | Exceptional response |
|---|---|
| 01h | 81h |
| 03h | 83h |
| 05h | 85h |
| 06h | 86h |
| 0Fh | 8Fh |
| 10h | 90h |
| 17h | 97h |

- Exception code details

| Code | Description |
|---|---|
| 01h | An unsupported function was specified. |
| 02h | The specified address does not exist. |
| 03h | The specified data is in an unacceptable format. |
| 21h | When writing to the holding register, the data is out of the setting range. |
| 22h | The inverter does not permit the function.<br>・An attempt was made to change the holding register of change prohibition during operation.<br>・Writing is performed to the holding register which is set to soft lock.<br>・An attempt was made to change an I/O pin function that cannot be changed.<br>・An attempt was made to change the contact a/b of the terminal to which the input terminal function "Reset [RS]" was assigned.<br>・Attempt to write to register when auto-tuning is enabled.<br>・An attempt was made to write to the lock target register while setting the password; and so on. |
| 23h | Writing to the read-only holding register or coil was performed. |
| 26h | Writing was performed during data writing or data initialization. |
| 27h | Only the higher register of "2 register length parameter" was accessed.<br>In Modbus communication of WJ-C1, there is a holding register with restrictions when accessing as "2 register length parameter" large data that cannot fit in 1 word. For the target register of "2 register length parameter", see "18.2 List of Parameters and Modbus Holding Registers".<br><br>(Example) "Output-frequency setting or monitor [F001]" is "2 register length parameter" of register numbers 0001h and 0002h. Reading/writing only 0002h of the lower word is possible for this register, but reading/writing only the upper word becomes an error. |
| 31h | Errors related to Modbus mapping function. For details, refer to "11.3 Modbus Mapping Function". |
| 32h | |

## 11.2.10 Storing Changes to Holding Registers

**Q**

- How to store the write data to the holding register in the non-volatile memory of the inverter?

**A**

- When the write command to the holding register (06h, 10h, 17h) is executed, the written value is enabled, but it is not stored in the non-volatile memory inside the inverter, and the change contents will disappear due to power shutdown. To store the change of the holding register in the non-volatile memory, execute the following "ENTER instruction" or "Single write mode command" separately.
- ENTER instruction must also be executed when changing motor control-related parameters such as motor constants shown below. If the ENTER instruction is not executed, the internal control variable is not recalculated due to parameter change, so the operating characteristics of the motor will not change.

### ■ List of parameters for which internal control variable recalculate is required

| Code | Item | Code | Item |
|---|---|---|---|
| [A003]*1 | Base frequency | [H002]*1 | Async. motor constant selection |
| [A004]*1 | Maximum frequency | [H003]*1 | Async. motor capacity |
| [A044]*1 | Control mode selection | [H004]*1 | Async. motor number of poles |
| [A082]*1 | Motor rated voltage | [H005]*1 | Async. motor speed response |
| [b112] | Free-V/f frequency 7 | [H020]*1 to [H034]*1 | Various async. motor constants |

*1. "2nd-motor control [SET]" target parameter. The second control parameter is also subject to setting.

### Storing changed data in non-volatile memory by ENTER instruction

- Execute the ENTER instruction when storing the changed data in the non-volatile memory at once or when recalculating the internal control variables by changing the motor constant, etc.
- The desired operation is executed by writing the following values to the holding register "0900h" using the write holding register [06h], etc.
- Determine the completion of the ENTER instruction by monitoring the "Write data in progress signal (coil No. 0049h)".
- To recalculate the motor constant, enter 0000h or 0002h in the holding register "0900h".

| Write command | Holding register | Set value | Operation details |
|---|---|---|---|
| ENTER instruction | 0900h | 0000 | Recalculates internal control variables when changing motor constants, etc. |
| | | 0001 | Stores the change to the holding register in the non-volatile memory. |
| | | 0002 to FFFF | Perform both above |

### ■ ENTER instruction

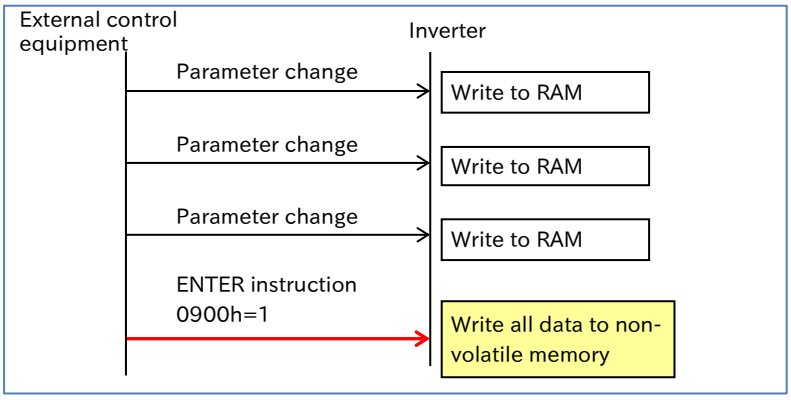

## Storing changed data in non-volatile memory by Single write mode

- With the "Single write mode", the changed data by the write command of the holding register can be stored in the memory for operation (RAM) and non-volatile memory.
- Write data to both the operation memory (RAM) and non-volatile memory by writing "1" to the holding register "0902h" using the write holding register [06h] before the holding register write command for parameter change.
- Completion of a single write mode should be determined by monitoring "Data writing in progress (coil number 0049h)".

| Write command | Holding register | Set value | Operation details |
|---|---|---|---|
| Single write mode | 0902h | 0001 | Only the holding register write command immediately after this command is written to the operation memory (RAM) and non-volatile memory. |

### Single write mode

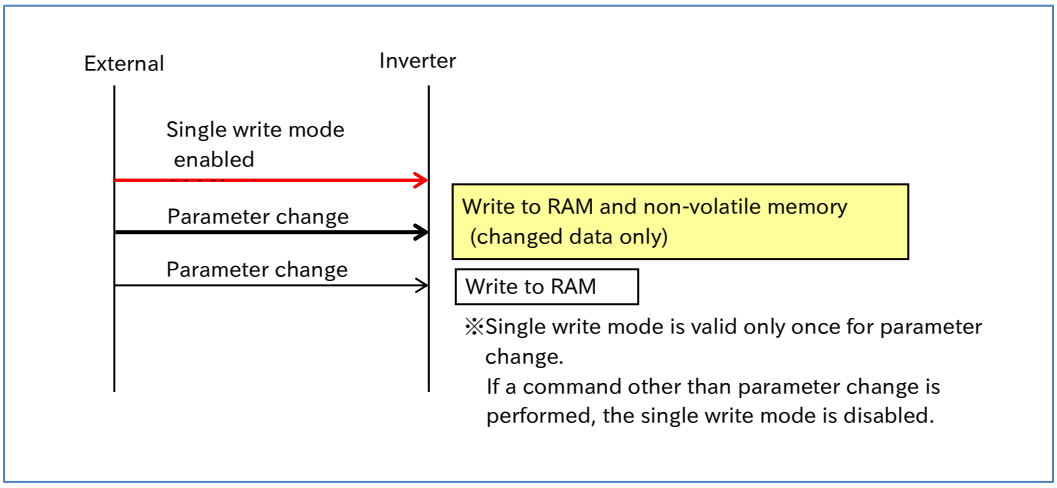


**Caution Failure**

- Do not turn off the power of the inverter while writing to the non-volatile memory by "ENTER instruction" and "Single write mode". If the power is turned off, the data will not be stored correctly. Determine whether data is being written by monitoring the "Data writing in progress (Coil number 0049h)".

**Prohibited**

- Since the memory element of the inverter has a limit on the number of rewrites, the life of the inverter may be shortened if the above write commands are frequently used. Minimize the write command. In particular, be careful not to execute these commands periodically and continuously due to loop processing of the external control equipment, etc.

**DO**

- If the parameters for which the above internal control variable recalculate is required are changed, the internal control variable must be recalculated by the ENTER instruction.

## 11.2.11 Endian Selection of Holding Registers

Q

- To change the endian (order of byte data) of Modbus communication data.

A

- The communication endian is the byte data sequence of the communication 1-word data to be transmitted and received. In WJ-C1, endian can be set for the data part of the transmit/receive frame.
- Depending on the specifications of the external control equipment, it may be necessary to swap the high byte and low byte of word data when reading/writing the holding register. You may not need to process them by changing the endian selection. For details, refer to the instruction manual of the external control equipment.

!

- Endian selection is valid only for read/write function codes (03h, 06h, 10h, 17h) of holding registers and option commands (03h, 06h, 10h, 51h, 52h, 53h) in option communication. Also, only the data part of the query/response is targeted.
- When using the inverter setting software ProDriveNext, set Endian selection to "Big Endian (00)" (default). If it is set to other settings, it will not work properly.
- Endian selection does not function in the trip history monitor (register number 0012h to 004Eh) and is read as big endian. When using the trip history monitor, set [P400] to "Big Endian". When "Little endian" or "Special endian" is selected, perform data sorting appropriately when reading data with an external control equipment, etc.

| Code | Item | Description | Data |
|---|---|---|---|
| [P400] | Endian selection | The order of data section byte data is big endian. | 00 |
| | | The order of data section byte data is little endian. | 01 |
| | | The order of data section byte data is special endian.<br>Byte data array for Hitachi PLCs. | 02 |

### Alignment of byte data for each endian setting

- Data order during Modbus communication for each setting is shown below, using one-word data = 0102 h and two-word data = 01020304h as examples.

#### For 1 register length data

| Send/receive byte order | Big endian | Little endian | Special endian |
|---|---|---|---|
| 1 | 01 | 02 | 01 |
| 2 | 02 | 01 | 02 |

#### For 2 register length parameter

| Send/receive byte order | Big endian | Little endian | Special endian |
|---|---|---|---|
| 1 | 01 | 04 | 03 |
| 2 | 02 | 03 | 04 |
| 3 | 03 | 02 | 01 |
| 4 | 04 | 01 | 02 |

## Example of holding register write query/response for each endian selection

- When the endian selection is set to Big Endian, Little Endian, or Special Endian, write multiple holding registers [10h], and write "Deceleration time 1 setting or monitor, 1st motor [F003]" = 3000 seconds of "2 register length parameter" and "RUN-key command rotation direction [F004]" = 01 (forward) of 1 register length data, the following is an example of a query.

| Query | | Endian | | |
|---|---|---|---|---|
| No. | Field name | Big | Little | Special |
| 1 | Slave address | 01 | 01 | 01 |
| 2 | Function code | 10 | 10 | 10 |
| 3 | Register start number (High) | 11 | 11 | 11 |
| 4 | Register start number (Low) | 04 | 04 | 04 |
| 5 | Number of registers (High) | 00 | 00 | 00 |
| 6 | Number of registers (Low) | 03 | 03 | 03 |
| 7 | Number of bytes | 06 | 06 | 06 |
| 8 | Write data 1 (High) | 00 | E0 | 93 |
| 9 | Write data 1 (Low) | 04 | 93 | E0 |
| 10 | Write data 2 (High) | 93 | 04 | 00 |
| 11 | Write data 2 (Low) | E0 | 00 | 04 |
| 12 | Write data 3 (High) | 00 | 01 | 00 |
| 13 | Write data 3 (Low) | 01 | 00 | 01 |
| 14 | CRC-16 (High) | EB | 65 | EB |
| 15 | CRC-16 (Low) | DB | B4 | DD |

[F003] is "2 register length parameter" and the resolution is 0.01 seconds, so write data is 3000.00 seconds =300000d=000493E0h.

[F004] = For forward rotation, written data is 0001h

# 11.3 Modbus Mapping Function

## 11.3.1 Setting Modbus Mapping Function

Q

- How to replace the inverter without changing the communication program of the host PC or PLC...etc?

A

- Modbus mapping function allows the register number, data type, and data scale specified by the communication command from an external control equipment to be converted to any register number or data scale in WJ-C1 inverter. This makes it possible to replace the inverter without changing the communication program on the external control equipment side.
- The register number and data of up to 10 registers can be converted.

!

- If the external register number is already used as the internal register number of the inverter, Modbus mapping setting takes precedence. When accessing the internal registers of the disabled inverters, perform Modbus mapping settings separately so that they are accessed indirectly.
- The "2 register length parameter" cannot be set to the internal address with some exceptions. For details, refer to "Modbus Mapping Configuration Process" in this section.

| Code | Item | Description | Data |
|---|---|---|---|
| [P200] | Resister mapping selection | Modbus mapping function disable | 00 |
| | | Modbus mapping function enable | 01 |
| [P201] to [P210] | External register 1 to 10 | Set the register number to be used in communication programs of external control equipment, etc.<br>0000h is judged as not set. | 0000h to FFFFh |
| [P211] to [P220] | External register 1 to 10 format | The data type of the external register is unsigned word data. | 00 |
| | | The data type of the external register is signed word data. | 01 |
| [P221] to [P230] | External register 1 to 10 scaling | The data specified from the external control equipment × this setting value = Inverter internal data.<br>Write: "External data × This setting" is written to the internal register.<br>Read: "Internal data / This setting" is read as external data | 0.001 to 65.535 |
| [P301] to [P310] | Internal register 1 to 10 | Set Modbus register number of the inverter.<br>0000h is judged as not set. | 0000h to FFFFh |

## Modbus mapping configuration process

(1) Set the register number of the external control equipment to "External register 1 to 10 ([P201] to [P210])". If "0000" is set, processing will not be performed.
(2) Set the data type of the external control equipment to "External register 1 to 10 format ([P211] to [P220])".
(3) In "External register 1 to 10 scaling ([P221] to [P230])", set the magnification when receiving from an external control equipment and capturing it inside the inverter. Conversely, when internal data is read, it is divided.
(4) Set Modbus register numbers inside the inverter to be actually accessed to "Internal register 1 to 10 ([P301] to [P310])".
 * For Modbus register number of the inverter, refer to "18.2 List of Parameters and Modbus Holding Registers". In addition, "2 register length parameter" cannot be set as an internal register. In this case, access the internal register directly. Alternatively, refer to " List of 2 register length parameters accessible as 1 register length" in the table below, and use these register numbers as internal registers.
(5) Set "Endian selection [P400]" as required. For details, refer to "11.2.11 Endian Selection of Holding Registers".
(6) Set "Register mapping selection [P200]" to "Enable Modbus mapping function (01)". When the parameters related to Modbus mapping function have been set or changed, be sure to turn the inverter power OFF and then ON again. Settings or changes to Modbus mapping function will not be reflected unless the power is turned on again.

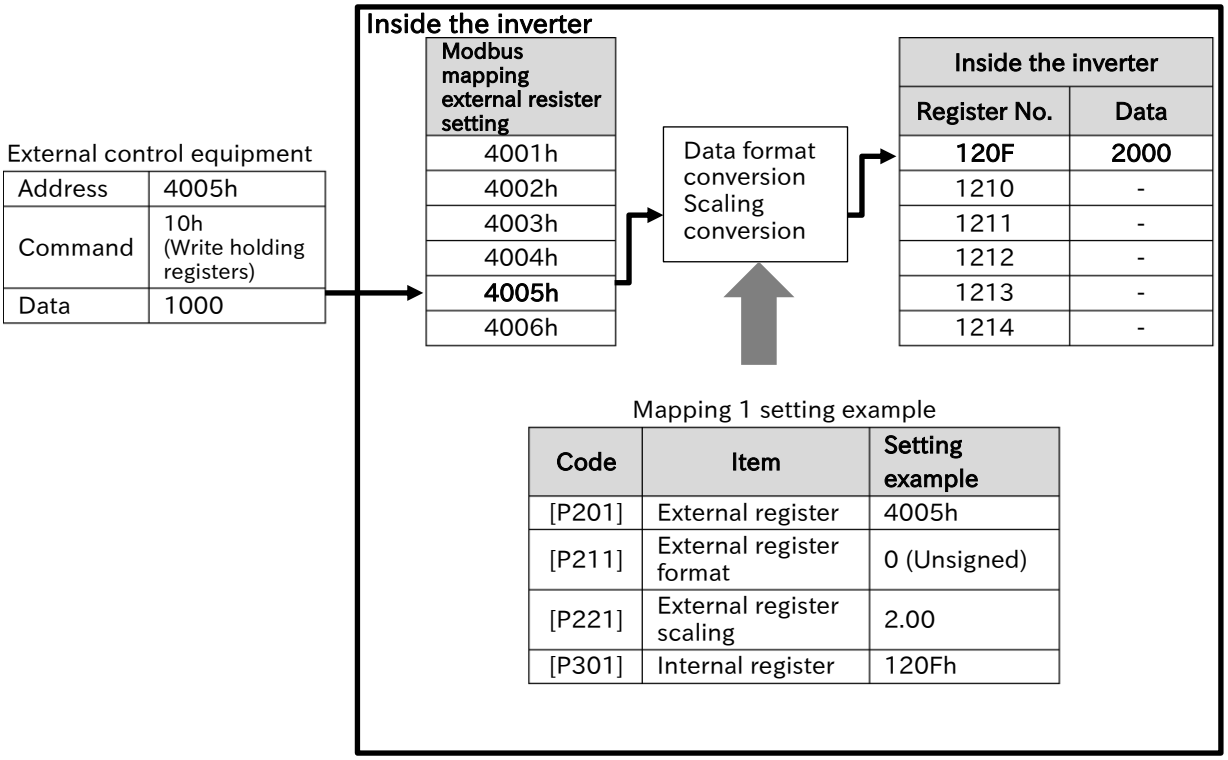


- The external address 4005h is mapped to the inverter internal register 120Fh, and the external data 1000d is written.
  Consider the data type of the external data as unsigned and write 2000d multiplied by 2.00 of the scale to the internal register. (In case of data reading, the internal data is returned to the external control equipment by 1/2.)

## List of 2 register length parameters accessible as 1 register length

| Code | Item | Register No. | R/W | Data range | Data resolution |
|---|---|---|---|---|---|
| [d001] | Output frequency monitor | 1E21h | R | 0 to 59000 | 0.01 (Hz) |
| [d004] | PID feedback value monitor | 1E22h | R | 0 to 65535 | 0.01 |
| [d007] | Output frequency scale conversion monitor | 1E23h | R | 0 to 65535 | 0.01 |
| [d008] | Detect speed monitor | 1E24h | R | −32768 to +32767 | 0.01 (Hz) |
| [d081] | Trip monitor 1 Output frequency | 1E25h | R | 0 to 59000 | 0.01 (Hz) |
| [F001] | Output frequency setting or monitor | 1F31h | R/W | 0, Min. to Max. frequency | 0.01 (Hz) |
| [F002] | Acceleration time 1 setting or monitor, 1st-motor | 1F32h | R/W | 0 to 65535 | 0.01 (s) |
| [F003] | Deceleration time 1 setting or monitor, 1st-motor | 1F33h | R/W | 0 to 65535 | 0.01 (s) |
| [A020] | Multi-speed 0, 1st-motor | 1F34h | R/W | 0, Min. frequency to Maximum frequency, 1st-motor | 0.01 (Hz) |
| [A021] | Multi-speed 1 | 1F35h | R/W | 0, Min. to Max. frequency | 0.01 (Hz) |
| [A022] | Multi-speed 2 | 1F36h | R/W | 0, Min. to Max. frequency | 0.01 (Hz) |
| [A023] | Multi-speed 3 | 1F37h | R/W | 0, Min. to Max. frequency | 0.01 (Hz) |
| [A061] | Upper frequency limit, 1st-motor | 1F38h | R/W | 0, Lower frequency limit, 1st-motor to Max. frequency, 1st-motor | 0.01 (Hz) |
| [A062] | Lower frequency limit, 1st-motor | 1F39h | R/W | 0, Min. frequency to Upper frequency limit, 1st-motor | 0.01 (Hz) |
| [A069] | Acceleration stop frequency | 1F3Ah | R/W | 0 to 59000 | 0.01 (Hz) |
| [A145] | ADD frequency | 1F3Bh | R/W | 0 to 59000 | 0.01 (Hz) |
| [A154] | Deceleration stop frequency | 1F3Ch | R/W | 0 to 59000 | 0.01 (Hz) |
| [A156] | PID sleep start level | 1F3Dh | R/W | 0 to 59000 | 0.01 (Hz) |
| [b007] | Frequency matching minimum restart frequency | 1F3Eh | R/W | 0 to 59000 | 0.01 (Hz) |

## Error handling of Modbus mapping function

- If there is an error in Modbus mapping setting, an exceptional response of the following exception code is returned. If an exceptional response occurs, review the external register settings or internal register settings.

| Code | Description |
|---|---|
| 31h | ・The external register has been set, but the internal register has still been "0000" (default).<br>・"2 register length parameter" is set in the internal register.<br>・A holding register number that does not exist at the internal address was set.<br>・The external register settings are duplicated. |
| 32h | ・Both of the higher and lower bits of "2 register length parameter" was set to the external register and either one of the bits was accessed. ((Example 1) in the figure below) |

- As shown in the figure below (Example 1), if the higher or lower register number of the inverter internal register of "2 register length parameter" is mapped as an external register, access to the register number that has not been set will result in an error.
  In the figure below (Example 1), the external register is set to 1103h, and the internal register 1107h is accessed. However, because 1103h is the high-order register number of "Acceleration time setting 1, 1st-motor [F002]", accessing the low-order register number 1104h results in an error (exception code "32h").
- When the register number already used inside the inverter is set as an external register as shown in the figure below (Example 2), the inverter internal register cannot be accessed. (Setting 1204h to the external register disables access to the conventional "Maximum frequency, 1st motor".)

Access to 1104 h is error (Example 1)

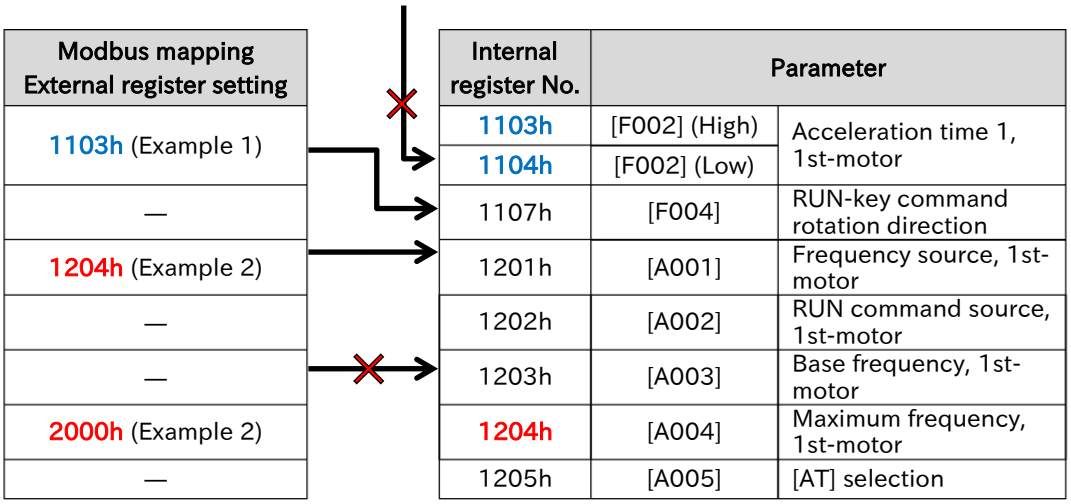

# 11.4 Inter-inverter Communication Function EzCOM

## 11.4.1 What is EzCOM?

Q

- What is the Inter-inverter communication function (EzCOM)?

A

- Inter-inverter communication function (EzCOM) is a function that uses Modbus-RTU communication to perform mutual communication between Hitachi Inverters (WJ-C1, WJ200, SJ series P1) without external control equipments such as PCs or PLCs.
- Coordinated operation between inverters is enabled without external control equipment by issuing a notification from one inverter to another, such as a change in frequency command or a change in operation/stop status.
- Combined with the programmed operation function (EzSQ), it is also expected to be used in unique driving and other applications tailored to user applications. Refer to "12.2 Program Operation Function EzSQ" for the program operation function (EzSQ).
- The operation procedures of EzCOM are outlined below. (When four inverters are connected)
- During EzCOM communication, each inverter shares the roles of "Administrator inverter", "Master inverter" and "Slave inverter". Be sure to prepare the inverter of node address 1. The inverter becomes the "Administrator inverter".
- When EzCOM communication starts, "Administrator inverter" will gradually switch "Master inverter". At this time, all other than "master inverter" are "slave inverter".

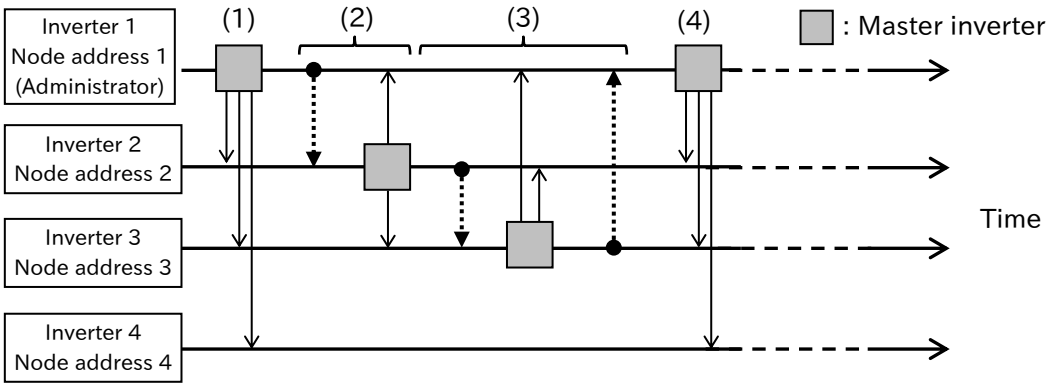


(1) When EzCOM communication starts, the inverter specified by the administrator inverter becomes "Master inverter". In the above example, inverter 1 = administrator inverter = the latest master inverter.
The master inverter (inverter 1) writes its own holding register data to the holding registers of other inverters according to the setting. Up to 5 data can be written.
(2) When the writing of inverter 1 is completed, the master inverter switches to inverter 2. Like the inverter 1, the master inverter (inverter 2) writes its own holding register data to the holding registers of other inverters according to the setting.
(3) When the switching of the master inverter is repeated for all specified inverters, inverter 1 is switched to the master inverter again.
(Up to eight master inverters can be set.)
(4) (1) to (3) is repeated.

!

- As with normal Modbus communication (RS-485), connect the [SP], [SN] and [L] terminals of the inverters that perform EzCOM communication. (Turn on the termination resistor selector switches of the inverters at both ends constituting EzCOM communication.)
- In EzCOM communication, up to eight master inverters can be set.
- Up to five writes from each master inverter can be set.
(Data can also be written to an inverter that does not become a master like the inverter 4 in the figure above example shown.)

## 11.4.2 Setting EzCOM

**Q**

- What is the concrete setting of the Inter-inverter communication function (EzCOM) between inverters?

**A**

- In the Inter-inverter communication function (EzCOM), by switching each inverter connected with communication to a master inverter, mutual communication is performed only between several inverters without external control equipments such as PCs or PLCs.
- During EzCOM communication, each inverter shares the roles of "Administrator inverter", "Master inverter" and "Slave inverter". For "Administrator inverter" and others, the setting item changes. Refer to the following items and set them appropriately for each of the inverters constituting EzCOM.

### Setting item of administrator inverter (Node address 1)

| Code | Item | Description | Data |
|---|---|---|---|
| [C072] | RS485 communication node address | Set the administrator inverter to node address 1. | 1 |
| [C096] | RS485 communication mode selection | Inter-inverter communication function (EzCOM) is used (Administrator inverter) | 02 |
| [C098] | EzCOM start node address | Set the start node address of the master inverter. | 1 to 8 |
| [C099] | EzCOM end node address | Set the end node address of the master inverter. | 1 to 8 |
| [C100] | EzCOM start method selection | Activation by input terminal function "EzCOM activation [ECOM]" | 00 |
| | | Always communication | 01 |
| [P140] to [P155] | Related to EzCOM write data Parameter | The administrator inverter can also send data as a "Master inverter". Refer to "Setting items of master inverter" in the following table. | - |
| [C001] to [C007] | Input Terminal Function Selection | EzCOM activation [ECOM]: When "[ECOM] terminal (00)" is set to [C100], EzCOM communication is performed when this input terminal is turned ON. | 81 |

### Setting items of master inverter (station No.1 to 8)

| Code | Item | Description | Data |
|---|---|---|---|
| [C072] | RS485 communication node address | Set [C098] to [C099] to the node address of the master inverter for EzCOM communication. | 1 to 8 |
| [C096] | RS485 communication mode selection | Use Inter-inverter communication (EzCOM) | 01 |
| [P140] | EzCOM number of data | Sets the number of write operations of the holding register. | 1 to 5 |
| [P141] | EzCOM destination address 1 | Set the node address to write data to, the holding register number, and the holding register number of the write data of the own address. Up to 5 sets can be set.<br>* For the destination register and source register, specify a register address that is decremented by -1 from the register number. | 1 to 247 |
| [P142] | EzCOM destination register 1 | | 0000h to FFFFh |
| [P143] | EzCOM source register 1 | | 0000h to FFFFh |
| [P144] | EzCOM destination address 2 | | 1 to 247 |
| [P145] | EzCOM destination register 2 | | 0000h to FFFFh |
| [P146] | EzCOM source register 2 | | 0000h to FFFFh |
| [P147] | EzCOM destination address 3 | | 1 to 247 |
| [P148] | EzCOM destination register 3 | | 0000h to FFFFh |
| [P149] | EzCOM source register 3 | | 0000h to FFFFh |
| [P150] | EzCOM destination address 4 | | 1 to 247 |
| [P151] | EzCOM destination register 4 | | 0000h to FFFFh |
| [P152] | EzCOM source register 4 | | 0000h to FFFFh |
| [P153] | EzCOM destination address 5 | | 1 to 247 |
| [P154] | EzCOM destination register 5 | | 0000h to FFFFh |
| [P155] | EzCOM source register 5 | | 0000h to FFFFh |

## Configuring EzCOM communication

### 1 Common settings for inverters that perform EzCOM communication

(1) Set RS-485 communication settings ([C071], [C074], [C075]) of the inverters to the same setting.
(2) Set [C076] to [C078] by referring to the following timing diagram and notes.

### 2 Setting of administrator inverter (Node address 1)

(3) To perform EzCOM communication, install an inverter with "RS485 communication node address [C072]" is set to (1) and "RS485 communication mode selection [C096]" is set to "EzCOM Administrator (03)". This inverter becomes "Administrator inverter".
(4) Set the first and last node addresses of the inverters to operate as "master inverters" to "EzCOM start node number [C098]" and "EzCOM end node number [C099]", respectively. Also, set it so that it becomes [C098] ≦ [C099].
(In the time chart below, [C098] = 1 and [C099] = 4.)
(5) EzCOM communication start timing can be selected in "EzCOM start method selection [C100]". When "Always communication (01)" is set, "Administrator inverter" starts EzCOM communication at the same time as the power is turned on. When the power-on of other inverters is delayed, communication time-out occurs in the "Administrator inverter", so the start timing of other inverters should be set first so that it does not do so. When the "[ECOM] terminal (00)" is set, EzCOM communication starts when the "EzCOM start [ECOM] (81)" input terminal is turned ON.

### 3 Setting of master and slave inverters

(6) For the inverter to become "Master inverter", it is necessary to set a continuous node address out of 1 to 8. Set the node address set from [C098] to [C099] of "Administrator inverter" to "RS485 communication node address [C072]" of the inverters to be "Master inverter" in order. The node address of the inverter that does not become the "Master inverter" should be a node address other than the values set from [C098] to [C099] of "Administrator inverter".
(7) Set "EzCOM (02)" in "RS485 communication mode selection [C096]" for all inverters participating in EzCOM communication except "Administrator inverter".
(8) Set the data ([P140] to [P155]) to be written from the master inverter to the slave inverter to each of "Master inverter".

### ■ Example of EzCOM communication timing diagram

・Configure EzCOM communication with four stations, node addresses 1 to 4.
・Node addresses 1 to 3 become master inverter.
・Node address 4 is slave only and does not become master inverter.

M Master data write
Master switching command
S Received data in write communication

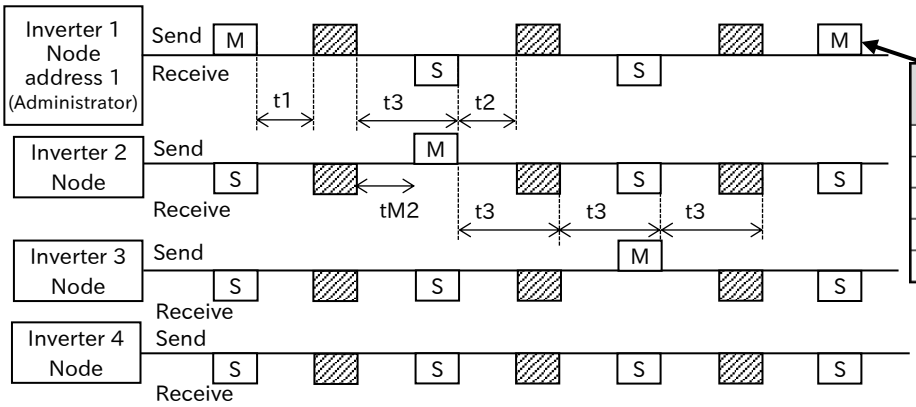


| Node address | Register | Data |
|---|---|---|
| 02 | XXXX | XXXX |
| 02 | XXXX | XXXX |
| 03 | XXXX | XXXX |
| 03 | XXXX | XXXX |
| 04 | XXXX | XXXX |

Up to 5 data writes can be specified.

t1: Silent interval + "RS485 communication wait time [C078]"
t2: Silent interval + "RS485 communication wait time [C078]"
t3: "RS485 communication timeout [C077]"

- Starting from the start of reception wait, a timeout occurs if data reception cannot be completed within the set time of "RS485 communication timeout [C077]" (t3 in the above figure). In this case, the operation follows "RS485 communication error selection [C076]".
- If a setting other than "Ignore (02)" is set to [C076] in the administrator inverter, communication between inverters stops when a communication time-out occurs in the administrator inverter. In this case, turn on the power to the administrator inverter again.
- Be sure to set a value other than 0.00 (recommended 1 second or longer) for [C077] of the Administrator inverter. If 0.00 is set, EzCOM function will be stopped if no data from the master inverter can be received. If it stops, turn on the administrator inverter again.
- The master switching command is sent from the administrator inverter at the following timing.
  - When the administrator inverter is a master inverter, after t1 in the figure above has elapsed from complete of data write communication
  - When the administrator inverter is a slave inverter, after t2 of the above figure has elapsed after completion of data transmission communication reception
- Do not set 08FFh (Write EEPROM (0900h – 1)) or 0901h (EEPROM write mode selection (0902h - 1) to the destination register.
- In the data write communication by the master inverter, the destination slave node address is set, but it is actually transmitted to all stations by broadcast communication. The received data is discarded in the slave that is not specified as the destination by the master.

(Memo)

12

# Chapter 12 ProDriveNext/EzSQ

This chapter describes an outline of the "Inverter configuration software ProDriveNext" and "Program operation function EzSQ", as well as parameter descriptions of the Inverter. For more information, refer to "Inverter configuration software ProDriveNext instruction manual (NT8001*X)" and "Easy-Sequence Function (EzSQ) Programming Guide (NT2021*X)".
Before conducting a test run, please read "Chapter 1 Safety Instructions/Risks" carefully and pay attention to safety.

**12.1 Inverter Configuration Software ProDriveNext ..... 12-1-1**
12.1.1 What You Can Do with ProDriveNext ..... 12-1-1
**12.2 Program Operation Function EzSQ ..... 12-2-1**
12.2.1 What Is EzSQ? ..... 12-2-1
12.2.2 EzSQ Program Start and Related Parameters ..... 12-2-2

# 12.1 Inverter Configuration Software ProDriveNext

## 12.1.1 What You Can Do with ProDriveNext

Q

- How to manage the parameters on PC?
- How to perform automatic operation with the program operation function?
- How to check the monitor data with a graph?

!

- The inverter configuration software ProDriveNext is used for setting and managing inverter parameters, displaying monitor data graphically, and editing and managing programs for the program operation function EzSQ. The main functions are shown below.

| Item | Description |
|---|---|
| Operation Display | Sets the output frequency and RUN/STOP command. The status of the intelligent terminals can also be checked. |
| Function Wizard | Basic setting, PID setting, auto-tuning, etc. can be set in wizard. |
| Parameter Setting Function | Various parameters can be set, such as setting parameters individually or searching for changed parameters from the factory default settings.<br>Parameters can be saved and read in CSV format file. |
| Monitor Function | You can display the specified monitor data in a table format or in a graph format with the horizontal axis as time. Monitor data can be saved and read in PMG format or CSV format file. |
| EzSQ programming function | EzSQ can be edited, debugged, uploaded and downloaded to the inverter, and programs saved and read in CSV format file. |

- For detailed information on ProDriveNext functions, refer to the "Inverter configuration software ProDriveNext instruction manual (NT8001*X)". When using EzSQ, refer to "Easy-Sequence Function (EzSQ) Programming Guide (NT2021*X)" together.
- Contact your supplier or local Hitachi sales office to get the latest version of ProDriveNext, EzSQ and related instruction manuals.

### Connection between PC and inverter

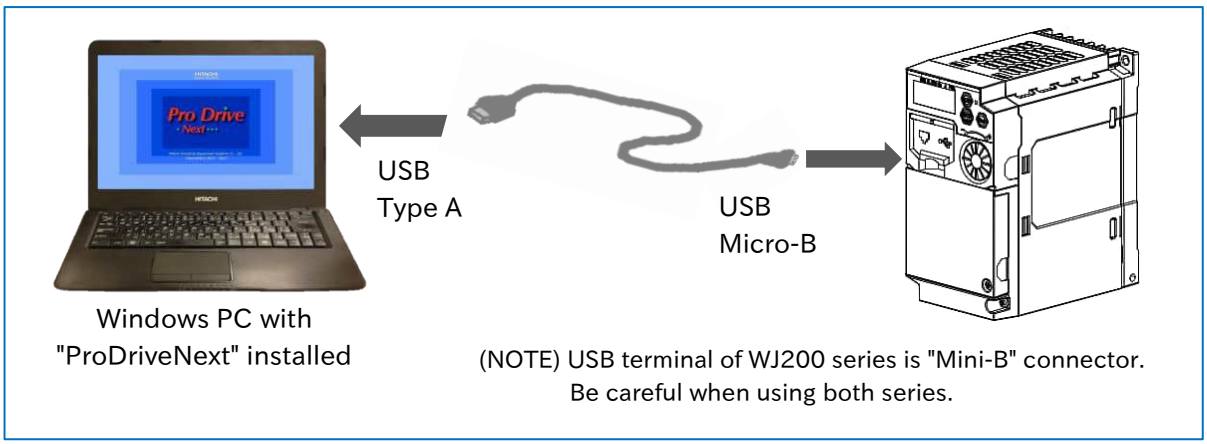


!

- When WJ-C1 is connected to ProDriveNext, it is recognized as "WJ200(Ver.3x.3xE)" on ProDriveNext.
- The USB connector of the previous model WJ200 series is a Mini-B connector. When using both series for replacement, etc., prepare the USB Micro-B cable for WJ-C1 or conversion connector separately.

# 12.2 Program Operation Function EzSQ

## 12.2.1 What Is EzSQ?

Q

- What can the program operation function EzSQ do?

A

- EzSQ is a function that performs simple sequencing control using a BASIC like program language dedicated to Hitachi Inverters.
- When using EzSQ, refer to "Inverter configuration software ProDriveNext instruction manual (NT8001*X)" and "Easy-Sequence Function (EzSQ) Programming Guide (NT2021*X)" for more information.

### Steps to EzSQ program execution

| No. | Description | Remarks |
|---|---|---|
| 1 | Create a EzSQ program using the inverter configuration software ProDriveNext. | ProDriveNext is required. |
| 2 | Compiled to make the format executable by the inverter.<br>Syntax checking of the created EzSQ program is performed at the same time as compilation. On error, compilation is interrupted and an error message is displayed. | |
| 3 | Downloads the compiled EzSQ program to the inverter and saves it to the storage element of the inverter. *1 | |
| 4 | Set the required parameters of the inverter. | Refer to "12.2.2 EzSQ Program Start and Related Parameters" in the next section. |
| 5 | Enable EzSQ function by setting "EzSQ enable selection [A017]" to "[PRG] terminal (01)" or "Always (02)". | |
| 6 | When "EzSQ enable selection [A017]" is "[PRG] terminal (01)", EzSQ program is executed when the [PRG] input terminal is turned on.<br>When "EzSQ enable selection [A017]" is "Always (02)", EzSQ program is automatically executed when the power is turned on. | |
| 7 | The operation status of EzSQ can be checked with the inverter's keypad, etc. | |

*1. By storing the program in the internal memory of the inverter, the program can be executed even after the power is turned on again. If you do not save the program to the internal memory, the downloaded program will be erased when the inverter power is cut off.
When performing debugging work such as confirmation program operation, it is recommended that the data is not stored in the internal memory but stored after debugging is completed.

!

- For details on EzSQ programming, refer to "Inverter configuration software ProDriveNext instruction manual (NT8001*X)" and "Easy-Sequence Function (EzSQ) Programming Guide (NT2021*X)".
- If a reset or trip reset is performed by the [RS] input terminal while EzSQ program is running, the program counter is reset and executed from the beginning of the program.
- After the program is downloaded to the inverter, the inverter and the PC can be disconnected and EzSQ program can be executed.

## 12.2.2 EzSQ Program Start and Related Parameters

**Q**

- How to start EzSQ program?
- What is the reserved variables and related parameters of EzSQ program?
- How to change and monitor the parameters in EzSQ programming from Keypad and I/O terminals?

**A**

### Selecting how to start EzSQ program

- To enable EzSQ function, set "EzSQ enable selection [A017]" to "[PRG] terminal (01)" or "Always (02)".

| Code | Item | Description | Data |
|---|---|---|---|
| [A017] | EzSQ enable selection | EzSQ function is disabled. | 00 |
| | | EzSQ program operates when [PRG] input terminal is on. | 01 |
| | | EzSQ program always runs when the inverter is turned on. | 02 |
| [C001] to [C007] | Input terminal function selection | Program RUN [PRG]:<br>When [A017] is set to "[PRG] terminal", EzSQ programmed operation starts when this input terminal is turned on. | 82 |

#### [A017] ="[PRG] terminal (01)"

- When "Program RUN [PRG] (82)" is assigned to any of the input terminals and that terminal is turned ON, EzSQ program starts operation.

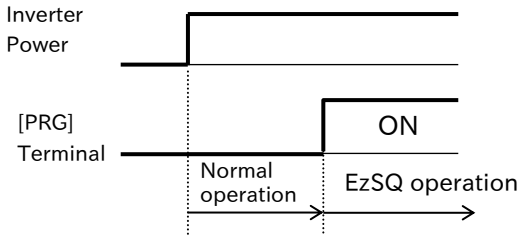


#### [A017] = "Always (02)"

- When the inverter is turned on, EzSQ programmed operation starts.

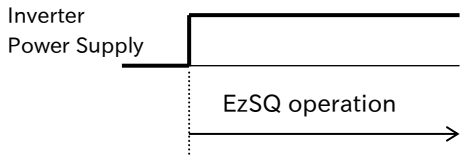


**A**

### Inverter operation control by EzSQ

- When setting the inverter run/stop command, output frequency, and acceleration/deceleration time using the reserved variable of EzSQ function, set the respective command of RUN command input source, frequency input source and acceleration/deceleration time input source to "EzSQ".
  However, if you want to operate EzSQ program but use Modbus communication as the frequency input source, set the input source as desired. (EzSQ operation is available without setting the input source to "EzSQ".)

| Code | Item | Description | Data |
|---|---|---|---|
| [A001]*1 | Frequency input source selection | When "Program function (EzSQ) (07)" is set, the reserved variable [SET-Freq] enabled and read/write of [F001] from keypad is also possible.<br>For details, refer to "9.2.9 Setting Frequency Command by Programmed Operation Function EzSQ". | 07 |
| [A002]*1 | RUN command input source selection | When "Control terminal (01)" is set, the reserved variables [FW]/[RV] and [STA]/[STP]/[F/R] on EzSQ are enabled.<br>For details, refer to "9.1.3 Operation with Forward/Reverse Input Terminals" and "9.1.4 Operation with Push Button (Automatic Return Contact) Input". | 01 |
| [P031] | Acceleration/Deceleration time input source selection | When "EzSQ (03)" is set, the reserved variable [ACCEL]/[DECEL] on EzSQ is enabled. (If [ACCEL]/[DECEL] is 0, the acceleration/deceleration times follow the [F002]*1 and [F003]*1.)<br>For details, refer to "9.3.1 Changing Acceleration/Deceleration Time". | 03 |

*1. "2nd-motor control [SET]" target parameter. The second control parameter is also subject to setting.

## A EzSQ program reserved variables and related parameters and I/O terminals

- Additional parameters related to EzSQ function are listed below. I/O terminals, analog I/O terminals, parameters and monitors in the table below input/output to EzSQ program by the reserved variables shown below.

### EzSQ function related monitor

| Code | Item | Description | Data |
|---|---|---|---|
| [d023] | Program counter | Displays the number of the program line being executed. | 0 to 1024 |
| [d024] | Program No. monitor | Displays the program No. that was set when the program was created. | 0 to 9999 |
| [d025] | User monitor-0 | Displays the values assigned to Umon(00), Umon(01), and Umon(02), respectively, in the program. | -2147483647 to +2147483647 |
| [d026] | User monitor-1 | | |
| [d027] | User monitor-2 | | |

### Parameters related to EzSQ function

| Code | Item | Description | Data |
|---|---|---|---|
| — | [Ai1] Terminal analog input | The analog input to [Ai1] terminal is captured to the general-purpose analog input XA(0). Parameter setting is not required. The input characteristic follows the start/end function ([A011] to [A015]). When the parameter is the initial value, 0 to 10VDC will be 0 to 10000. | 0 to 10000 |
| — | [Ai2] Terminal analog input | The analog input to [Ai2] terminal is loaded to the general-purpose analog input XA(1). Parameter setting is not required. The input characteristic follows the start/end function ([A101] to [A105]). If the parameter is the initial value, 4 to 20 mA will be 0 to 10000. | 0 to 10000 |
| [C001] to [C007] | Input terminal function selection | General-purpose input 1 to 7 ([MI1] to [MI7]): When [MI1] to [MI7] is assigned to an input terminal, each terminal status is input to the internal variables X(00) to X(06) (or Xw). | 56 to 62 |
| [C021] [C022] [C026] | Output terminal function | General-purpose output 1 to 3 ([MO1] to [MO3]): When [MO1] to [MO3] is assigned to an output terminal, the status of the internal variables Y(00) to Y(02) (or Yw) is output to the respective terminals. | 44 to 46 |
| [C027] | [Ao2] output monitor selection | When "General-purpose analog output YA(0)" is set, the value of reserved variable YA(0) is output from the [Ao2] terminal. | 12 |
| [C028] | [Ao1] output monitor selection | When "General-purpose analog output YA (1)" is set, the value of reserved variable YA (1) is output from the [Ao1] terminal. | 13 |
| [P003] | Pulse input, target function selection | When "Extension input terminal for EzSQ (02)" is set, the status of the [PLA] terminal is input to the internal variable X(07) (or Xw). | 02 |
| [P100] to [P131] | EzSQ User parameter U(00) to U(30) | User parameters U(00) to U(30) can be read/written from Keypad by [P100] to [P131]. | 0 to 65535 |

### User trip 0 to 9

| Code | Item | Description | Trip code |
|---|---|---|---|
| — | User trip | A user trip can be generated at any timing by executing trip command from EzSQ program. [E50] to [E59] occur according to trip 0 to trip 9. | E50 to E59 |

(Memo)

13

# Chapter 13 Option Board

Various option boards for WJ200 series are available for WJ-C1. This chapter describes notes on using option board and related parameters. For more information on option board, refer to the respective instruction manuals.
When performing each work, carefully read "Chapter 1 Safety Instructions/Risks" and the corresponding chapters, and pay attention to safety.

**13.1 Using Option Board for WJ200 Series ..... 13-1-1**
13.1.1 Available option boards for WJ200 series ..... 13-1-1
**13.2 Settings for Each Option Board ..... 13-2-1**
13.2.1 Common Settings for Communication Option Board ..... 13-2-1
13.2.2 CC-Link Option ..... 13-2-2
13.2.3 EtherCAT Option ..... 13-2-2
13.2.4 PROFIBUS Option ..... 13-2-2
13.2.5 PROFINET Option ..... 13-2-2

# 13.1 Using Option Board for WJ200 Series

## 13.1.1 Available option boards for WJ200 series

Q
- What are available option boards?
- How to mount and configure option board?

A
- The following option boards for WJ200 series are available on WJ-C1.

| Product name | Content |
|---|---|
| WJ-CCL | CC-Link communication option board |
| WJ-ECT | EtherCAT communication option board |
| WJ-PB | PROFIBUS communication option board |
| WJ-PN | PROFINET communication option board |

!
- For details on how to install the option board, refer to each instruction manual. Refer to "S.4 Related Technical Documents" for details about the document number, etc. of the instruction manual.
- The instruction manuals for each option are based on the WJ200 series, but the removal of the control terminal cover and terminal block cover, etc. are the same for the WJ-C1.

### ■ Notes on depth dimensions

- When mounting an option for WJ200 series on a WJ-C1, the depth dimensions change as shown below. Pay attention especially when replacing from WJ200 series.

(Example) For C1-002LF (three-phase 200 V class 0.2 kW)

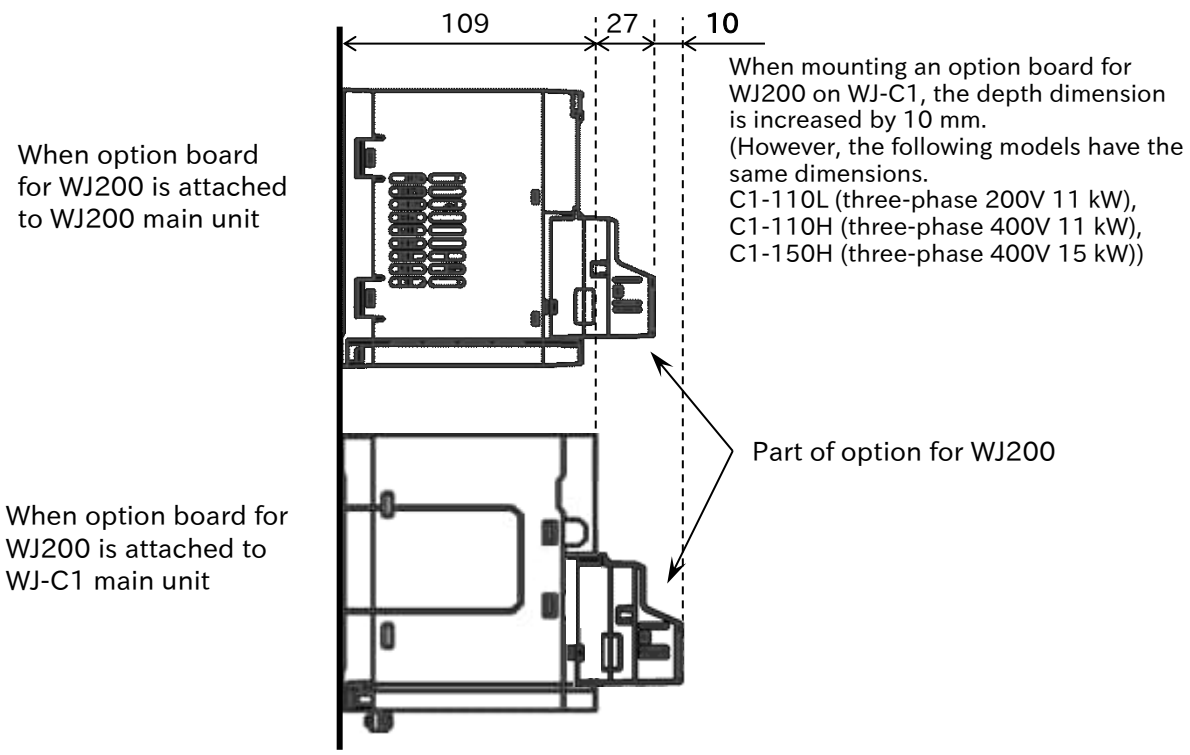

# 13.2 Settings for Each Option Board

## 13.2.1 Common Settings for Communication Option Board

Q

- How to continue operation even when a communication error is detected between the inverter main unit and the option board?
- How to specify the behavior of the inverter when a communication error with the host device occurs when using the communication option?

A

- Set the inverter operation when an error occurs in the data transfer between the option board and the inverter main unit using "Operation selection at an option error [P001]". Normally, use with "Trip (00)".
- When using the communication option, set the timeout time for detecting communication time-out with the host device and the inverter operation when timeout occurs in "Communication Watch Dog Timer [P044]" and "Operation selection at option communication timeout [P045]", respectively. Set them properly according to the system.

!

- If run/stop command is given through the option board when "Continued operation (01)" is set to "Operation selection at an option error [P001]", it may not be possible to stop from the option board. Be careful to have a system configuration that can be stopped.

| Code | Item | Content | Data |
|---|---|---|---|
| [P001] | Operation selection at an option error | Trip:<br>A trip occurs when an error is detected in the communication between the option board and the inverter main unit. | 00 |
| | | Continued operation:<br>Even if an error is detected in the communication between the option board and the inverter main unit, the operation will continue. | 01 |
| [P044] | Communication Watch Dog Timer | When using the communication option, set the communication timeout period with the host device. If there is no communication with the host device during operation for the time set in this setting, the inverter will operate as set in the "Operation selection at option communication timeout [P045]". | 0.00 to 99.99 (s) |
| [P045] | Operation selection at option communication timeout | Trip | 00 |
| | | Trip after deceleration stop | 01 |
| | | Ignore | 02 |
| | | Free run stop | 03 |
| | | Decelerating stop | 04 |

## 13.2.2 CC-Link Option

- CC-Link communication dedicated parameters are not provided on the inverter main unit.
  For more information on parameters that need to be set, refer to the "WJ-CCL Quick Reference Guide (NT331*)" (Only in Japanese).

## 13.2.3 EtherCAT Option

- Parameters dedicated for EtherCAT communication are not provided on the inverter main unit.
  For more information on parameters that need to be set, refer to the "WJ-ECT Quick Reference Guide (NT339*X)".

## 13.2.4 PROFIBUS Option

- The following table shows the parameters dedicated for PROFIBUS communication.
  For more information on the following table and parameters that need to be set, refer to the "WJ-PB Quick Reference Guide (NT354*X)".

| Code | Item | Content | Data |
|---|---|---|---|
| [P160] to [P169] | Flexible command writing register 1 to 10 | Set the communication data when Telegram103 to 105 is selected. | 0000h to FFFFh |
| [P170] to [P179] | Flexible command reading register 1 to 10 | | 0000h to FFFFh |
| [P180] | PROFIBUS Node address | Sets the node address of PROFIBUS. | 0 to 125 |
| [P181] | PROFIBUS Clear Mode selection | Not used. | 00 to 01 |
| [P182] | PROFIBUS Map selection | Not used. | 00 to 02 |

## 13.2.5 PROFINET Option

- The following table shows the parameters dedicated to PROFINET communication.
  For more information on the following table and parameters that need to be set, refer to the "WJ-PN Quick Reference Guide (NT355*X)".

| Code | Item | Content | Data |
|---|---|---|---|
| [P160] to [P169] | Flexible command writing register 1 to 10 | Set the communication data when Telegram103 to 105 is selected. | 0000h to FFFFh |
| [P170] to [P179] | Flexible command reading register 1 to 10 | | 0000h to FFFFh |

14

# Chapter 14 Safety Function STO

This chapter describes the safety function STO (Safe Torque Off) defined in the functional safety EN 61800-5-2.
For further information on functional safety, refer to the separate "WJ Series C1 Safety Function Guide (NT3612*X)".
For details of the installation, wiring, and the various functions of the inverter, refer to the corresponding chapters.
When performing each work, carefully read "Chapter 1 Safety Instructions/Risks" and the corresponding chapters, and pay attention to safety.

**14.1 Using the Safety Function STO (Safe Torque Off) ..... 14-1-1**
14.1.1 STO Function ..... 14-1-1
14.1.2 STO State Monitor Output (EDM Signal) ..... 14-1-3
14.1.3 STO Status Indication ..... 14-1-4

# 14.1 Using the Safety Function STO (Safe Torque Off)

## 14.1.1 STO Function

Q

- How to use the safety function defined in the functional safety EN 61800-5-2?

A

- The WJ-C1 is equipped with a STO (Safe Torque Off) function defined in EN 61800-5-2. This function is equivalent to stop category 0 defined in IEC 60204-1.
- STO function is enabled by turning on the WJ-C1 and starting the inverter. Special operations such as switches are not required.

| Standards | Remarks |
|---|---|
| EN ISO 13849-1 | CAT. 3, PL e |
| EN 61800-5-2 | SIL 3 |
| UL 1998 | Diagnostic software class 1 |
| IEC 60204-1 | Stop Cat. 0 |

This guide explains only the outline of the STO function. When this product is handled as a functional safety certified product, be sure to check the separate "WJ Series C1 Safety Function Guide (NT3612*X)" and implement the items required as a functional safety system (verification, validation, etc.).
The information given in WJ Series C1 Safety Function Guide takes precedence.

### Wiring and operation procedure of safety function

- Input of STO signal is performed by redundant input of STO terminals [ST1] and [ST2]. When voltage is applied to each input terminal and current flows, operation of safety path is enabled. (When shipped from the factory, operation is always enabled with a short-circuit wire.)
- The voltage for inputting STO signal can be selected from the inverter's internal power supply ([P24S] terminal) or an external 24 VDC power supply.
- STO function is enabled and the output to the motor is shut off by turning OFF either of the external switches for STO signal input as shown in the wiring diagram on the next page.

| Terminal symbol | Terminal name | Description | Electrical characteristics |
|---|---|---|---|
| P24S | 24 VDC output terminal (Only for STO input) | 24 VDC power supply for contact signals dedicated to [ST1]/[ST2] terminals. | Max. output current: 100 mA |
| CMS | Common for 24 VDC output terminal (Only for STO input) | Common terminal for [P24S]. | |
| ST1/ST2 | STO input terminal | Input terminal of STO signal. | Voltage between [ST1]/[ST2] and [CMS]:<br>ON Voltage: Min.15 VDC<br>OFF Voltage: Max.5 VDC<br>Maximum allowable voltage: 27 VDC<br>Load current: 5.8 mA (at 27 VDC)<br>Internal resistance: 4.7 kΩ*1 |
| 11 | Output terminal [11] function | When EDM switch is turned ON, output terminal [11] becomes STO state monitor output (EDM signal). | Open collector output<br>Between [11] and [CM2]<br>Voltage drop at ON: 4 VDC or less<br>Maximum allowable voltage: 27 VDC<br>Maximum allowable current: 50 mA |
| CM2 | Common for output terminal | Common terminal for output terminal [11]. | |

*1. Follow Digital input type 1 defined in IEC61131-2

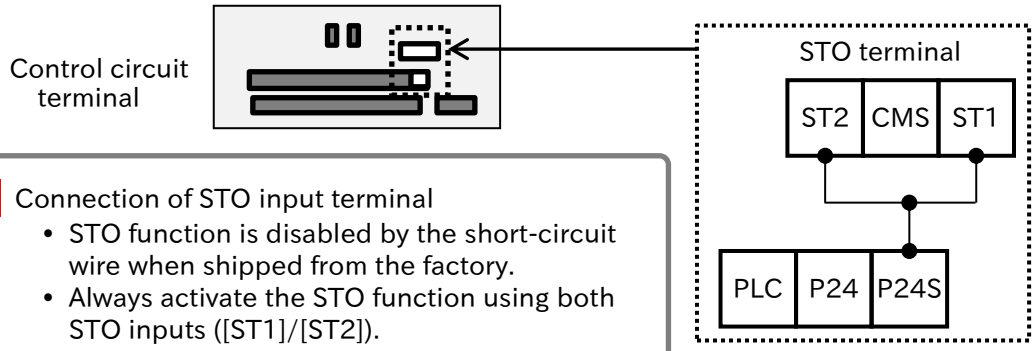


Connection of STO input terminal
- STO function is disabled by the short-circuit wire when shipped from the factory.
- Always activate the STO function using both STO inputs ([ST1]/[ST2]).

■ When using the internal power supply ([P24S] terminal)

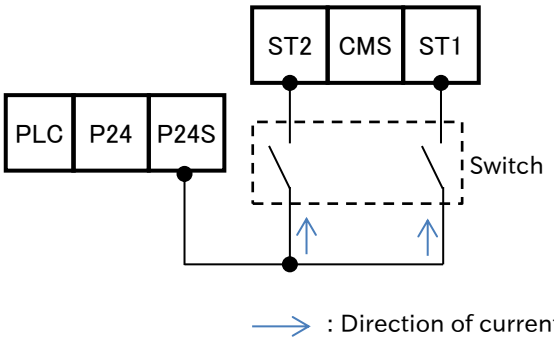


■ When using an external power supply

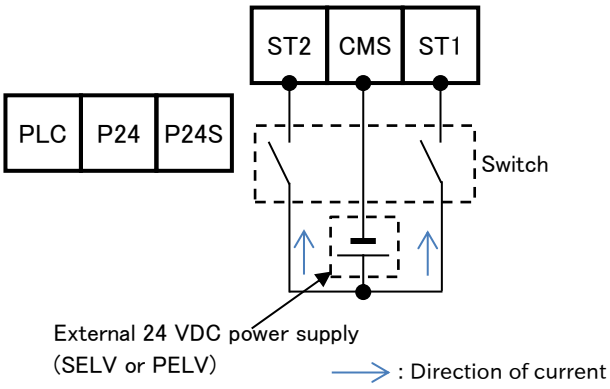


## STO status retention function (not supported as a safety function)

- The retention function that retains the STO status of internal safety path even if STO input is canceled is not implemented as a safety circuit. Therefore, if a RUN command is given after cancellation of STO input or STO input is canceled while the command is given, the inverter starts output to the motor.
- Hence, to satisfy the requirement about cancellation of emergency stop specified in IEC60204-1, either of the following measures have to be taken.
  (1) At the same time as STO input, set the RUN command to the inverter to stopped status.
  (2) Configure the system so that STO input to WJ-C1 is canceled when system reboot is required by the user.

By parameter settings, display of the keypad depending on ON/OFF status of [ST1]/[ST2] terminals, the error display at trip, etc. can be selected. For more information, see "14.1.3 STO Status Indication".

## 14.1.2 STO State Monitor Output (EDM Signal)

**Q**

- How to check the operation of STO function by enabling STO state monitor output (EDM signal)?

**A**

- When using STO state monitor output (EDM signal), turn ON EDM switch on the control circuit terminal. "Output terminal [11] function [C021]" is automatically changed to "STO state monitor output [EDM] (62)". At the same time, "Output terminal [11] active state [C031]" becomes "NO: Normally Open (00)".
- STO state monitor output (EDM signal) is a reference signal for monitoring the input status of STO signal and failure detection status of the internal safety path. It is not permitted to activate the safety function using this signal.

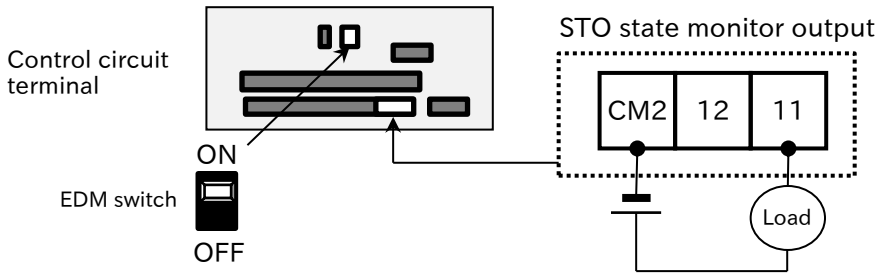


- Refer to the signal matrix in the table below for the
- operation of EDM signal for [ST1]/[ST2] and failure detection status. EDM signal turns ON only when both STO inputs are correctly input and internal failure is not detected.

| Signal | Status 1 | Status 2 | Status 3 | Status 4 | Status 5 |
|---|---|---|---|---|---|
| [ST1]*1 | STO | Operation permitted | STO | Operation permitted | STO or Operation permitted |
| [ST2]*1 | STO | STO | Operation permitted | Operation permitted | STO or Operation permitted |
| Failure detection | None | None | None | None | Detected |
| [EDM] | ON | OFF | OFF | OFF | OFF |
| Output to the motor | Shut off | Shut off | Shut off | Output permitted | Shut off |

*1. Correspondence between the input status of [ST1]/[ST2] and the contact status: Operation permitted = contact ON, STO = contact OFF

**!**

- When the EDM switch is ON, input terminals 3 and 4 of "Input terminal monitor [d005]" indicate the status of [ST1]/[ST2], respectively. For details, see section "10.2.1 Monitor the Status of Input and Output Terminals".
- When EDM switch is turned OFF from ON, "Output terminal [11] function [C021]" is automatically changed to "No assignment (no)".

### ■ STO timing chart

- The timing chart of the output to the motor and EDM signal for STO input [ST1]/[ST2] is shown below. The output to the motor is shut off within 20 ms after [ST1] and [ST2] are turned off.

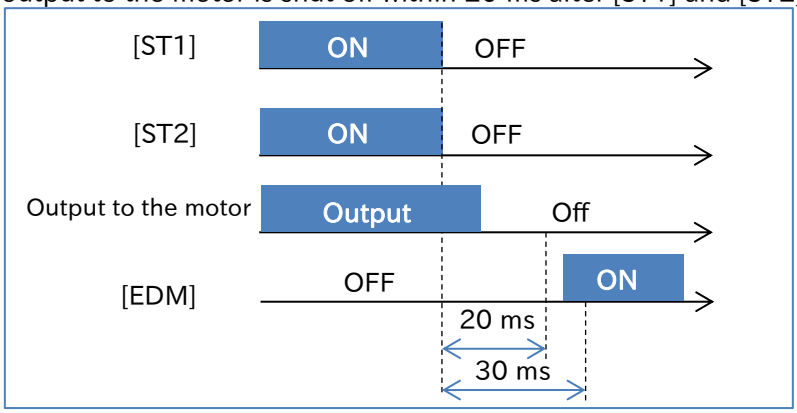

## 14.1.3 STO Status Indication

Q
- How to display STO terminal input status on the keypad?
- How to change the error that is occurred by STO depending on the setting?

A
- The indication of the keypad according to [ST1]/[ST2] input status or errors that occur can be changed by "STO input mode selection [b145]" setting.
- The function shown below is a referenced signal to monitor the input status of STO signal and the failure detection status of the internal safety path. It is not permitted to activate the safety function using this signal.

| Code | Item | Description | Data |
|---|---|---|---|
| [b145] | STO input mode selection*1 | No special display. No trip (only shut down by hardware) | 00 |
| | | No special display. "STO shut-off error [E37]" occurs. | 01 |
| | | Display [-S--] "ST1,ST2 mismatch error [E98]" occurs. | 02 |
| | | Display [-S--] (03 and 04 are the same in terms of function.) | 03 (04) |
| | | Display [-S--]/[-F**] Detect a delay of [ST1]/[ST2].<br>*If only one of [ST1]/[ST2] is in operation enable status (contact ON) for more than the "STO release delay allowed time [b146]", recovery is not possible unless both of [ST1]/[ST2] are set to STO (contact OFF) status. | 05 |
| | | Display [-S--]/[-F**] Detect a delay of [ST1]/[ST2]. | 06 |
| [b146] | STO release delay allowed time | Allowed time from when only one of [ST1]/[ST2] is in operation enable status (contact ON) to when both are in operation enable status (contact ON) when returning from STO status to operation enable status when (05) is set in [b145]. | 0.00 to 2.00 (s) |
| [b147] | STO special indication cancel selection | If a special display such as [-S--] is displayed, the indication continues. | 00 |
| | | Pressing a key on the keypad returns the display to the normal display while a special display is displayed. However, the special display is displayed again by change of the display status (change from [-S-] to [-F01], etc.) or elapsed the time set in [b148]. | 01 |
| [b148] | STO special indication re-display time | When the special display is canceled, the special display is re-displayed after this set time has elapsed. | 1 to 30 (s) |
| [C021]<br>[C022]<br>[C026] | Output terminal function | STO input discrepancy [FSC]:<br>When [b145] is set to (05) or (06), this signal is turned OFF if the input status of [ST1] and [ST2] are different (special display [-F**]). The judgement cycle of this signal is 10 ms. | 64 |

*1. If a fault is found inside the safety path, "STO internal failure error [E99]" will occur regardless of [b145] setting.

- The contents of the special display and error display (E37, E98, E99) related to [b145] is are follows.

| Keypad display | Description |
|---|---|
| -S-- | STO |
| -F01 | Delay of [ST1] is detected during operation restoration from STO. |
| -F02 | Delay of [ST2] is detected during operation restoration from STO. |
| -F10 | Delay of [ST1] is detected during transition to STO. |
| -F20 | Delay of [ST2] is detected during transition to STO. |
| E37 | At least either [ST1] or [ST2] is OFF. Release trip by inputting [RS], STOP/RESET key, or turning the power off and then on again. |
| E98 | Status of [ST1] and [ST2] are inconsistent. Release trip by inputting [RS], STOP/RESET key, or turning the power off and then on again. |
| E99 | An error is detected in the internal circuit. The trip cannot be cancelled by inputting [RS] and STOP/RESET key. Trip can be canceled only by turning the power off and then on again. |

| Input status | | ① | ② | ③ | ④ | ⑤ |
|---|---|---|---|---|---|---|
| [ST1] | | Close | Open | Close | Open | Open or Close |
| [ST2] | | Close | Close | Open | Open | Open or Close |
| Failure detection | | None | | | | Detected |
| [b145] | 00 | - | - | - | - | E99 |
| | 01 | - | E37 | E37 | E37 | E99 |
| | 02 | - | E98 | E98 | -S-- | E99 |
| | 03 | - | - | - | -S-- | E99 |
| | 04 | - | - | - | -S-- | E99 |
| | 05 | - | -F01 or -F20 | -F02 or -F10 | -S-- | E99 |
| | 06 | - | -F01 or -F20 | -F02 or -F10 | -S-- | E99 |

Definition of event

| Event | Description |
|---|---|
| e1 | Input status becomes ① |
| e2 | Input status becomes ② or ③ |
| e3 | Input status becomes ⑤ |
| e4 | Input status becomes ④ |
| e5 | Input status is held more than the time set in "STO release delay allowed time [b146]".<br>This event does not exist except for [b145] = 05. |

## ■ State transition diagram (b145:00)

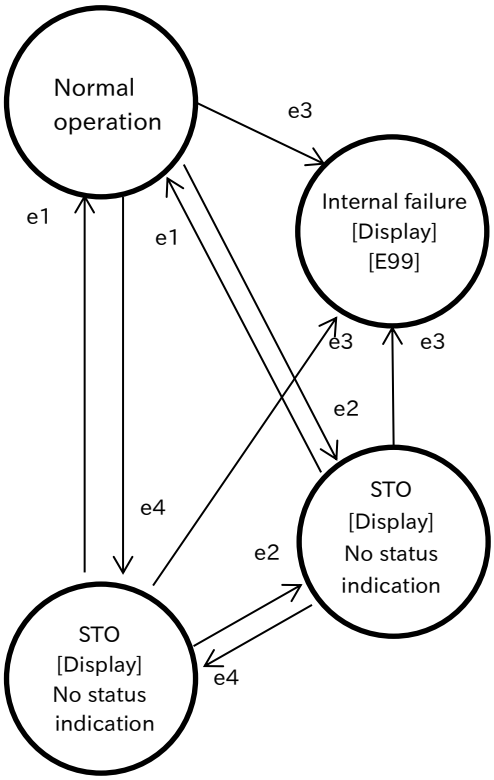

## State transition diagram (b145:01)

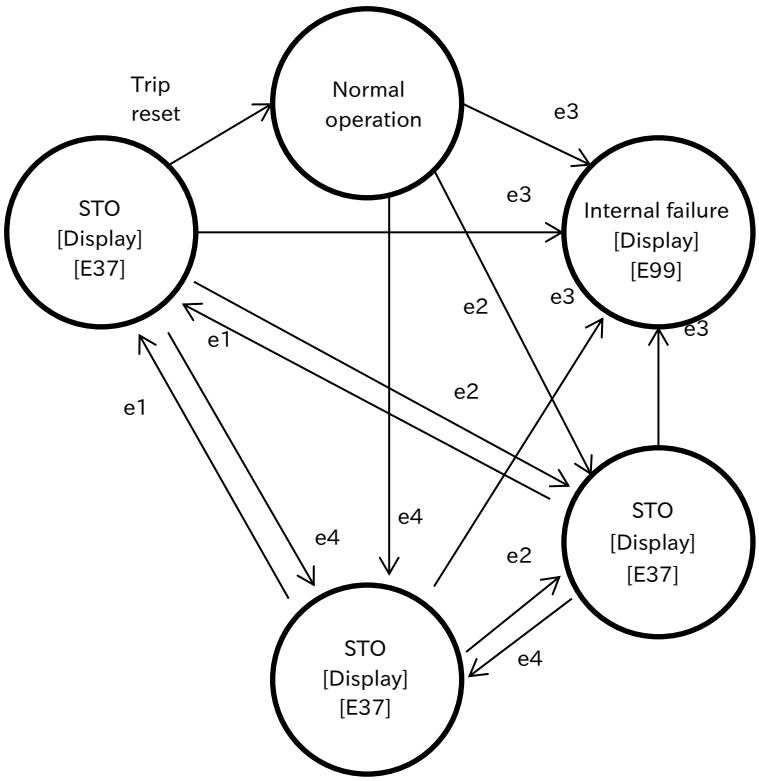


## State transition diagram (b145:02)

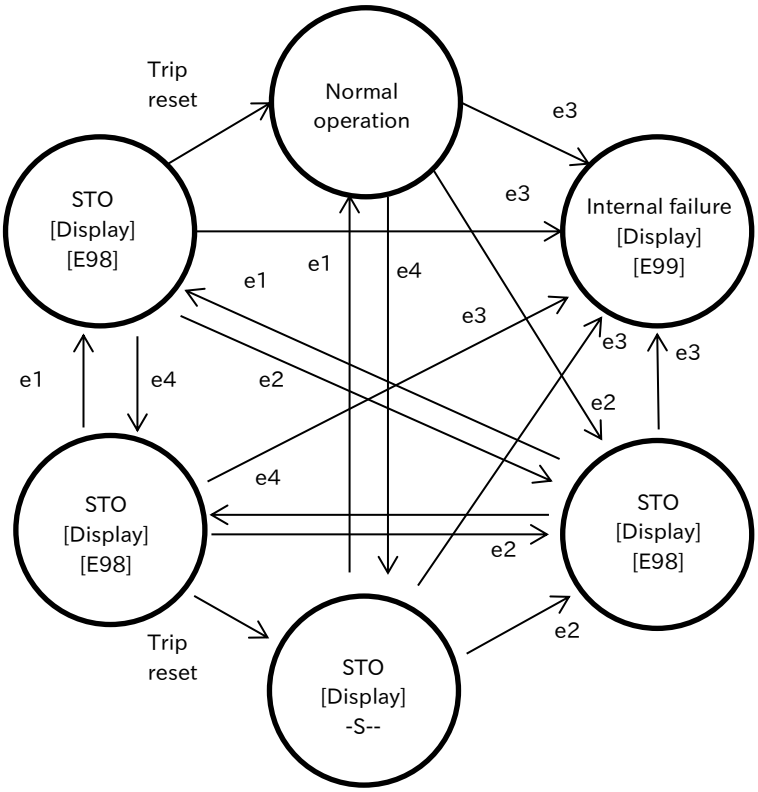

## State transition diagram (b145:03/04)

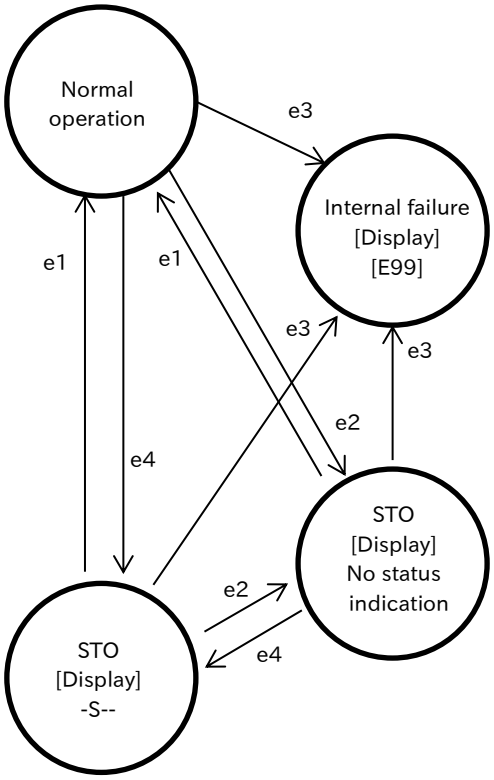


## State transition diagram (b145:05/06)

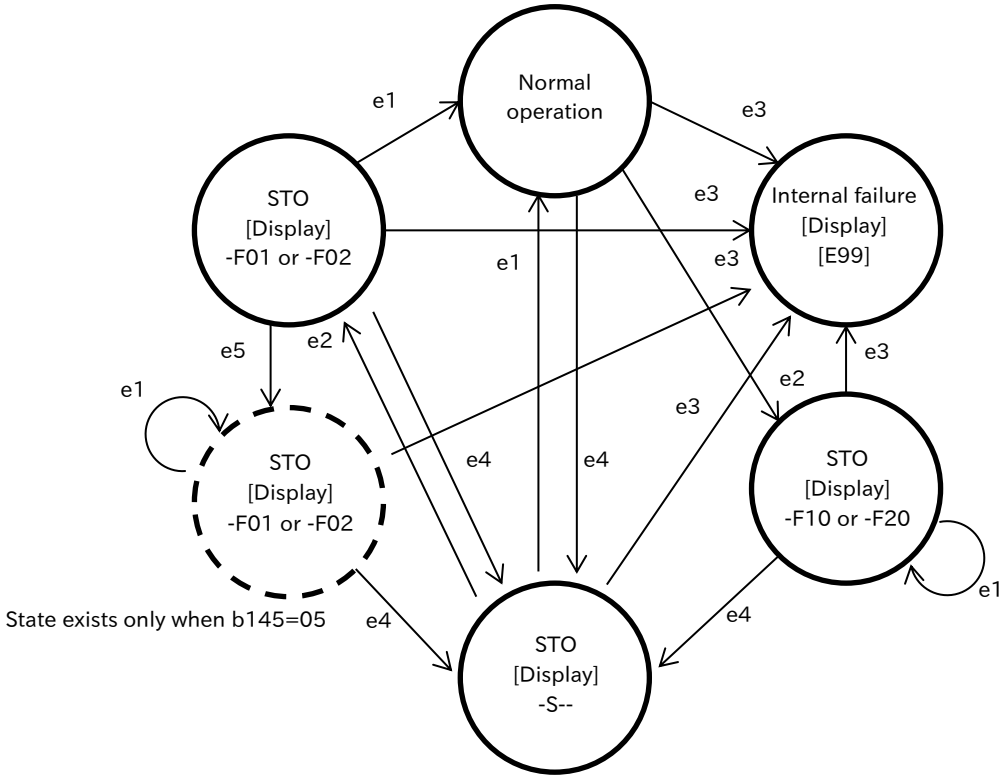

## Operation of STO input discrepancy [FSC]

The [FSC] signal is deactivated when [b145] is set to 05 or 06 and the inverter is in trip or delay ON/OFF of [ST1]/[ST2] is detected (-F** is displayed). The judgement cycle of the [FSC] signal is 10 ms. (If [b145] is not 05/06 and the inverter is not in trip, the [FSC] signal is ON.)

(e.g.) [b145] = 05

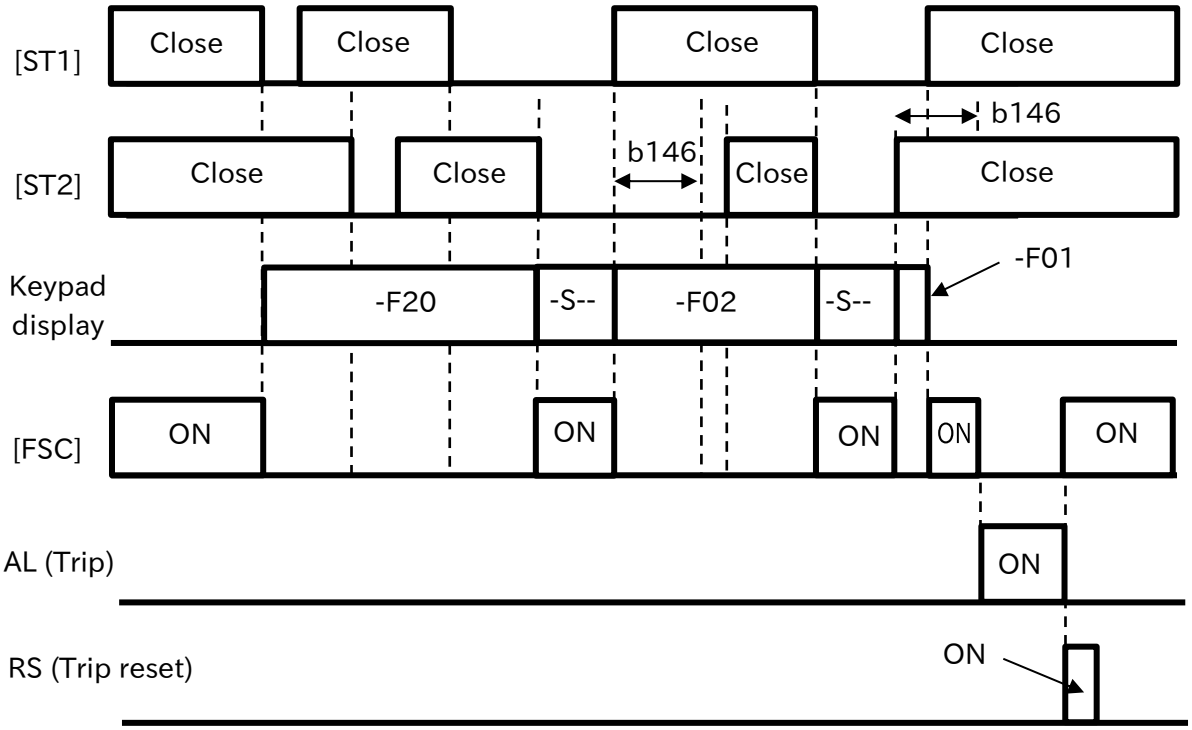


(e.g.) [b145] = 06

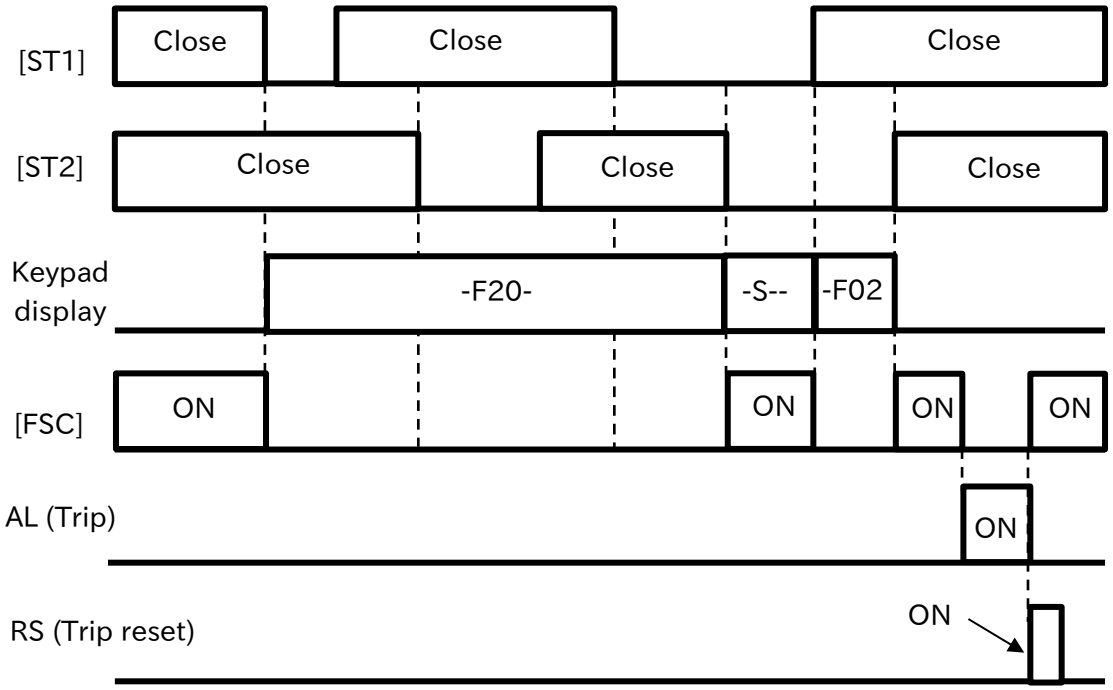

(Memo)

15

# Chapter 15 Tips/FAQ/Troubleshooting

This chapter describes troubleshooting information for protection function related errors, warning function related warnings, and "When something seems wrong".
Read this chapter first when the inverter does not operate as intended or a problem occurred.
Address these issues according to the circumstances by referring to the next and subsequent sections.

**15.1 Self Diagnosis of Problems ..... 15-1-1**
15.1.1 Procedure for Checking When a Problem Occurs ..... 15-1-1
**15.2 Troubleshooting for Protection Functions Related Error ..... 15-2-1**
15.2.1 Checking Trip Information ..... 15-2-1
15.2.2 Error Code List and Countermeasures ..... 15-2-2
**15.3 Troubleshooting for Warning Functions Related Error ..... 15-3-1**
15.3.1 Warning Display ..... 15-3-1
15.3.2 Other Displays ..... 15-3-2
**15.4 How to Check When Something Is Wrong ..... 15-4-1**
15.4.1 Troubleshooting Other Than Trip and Warning ..... 15-4-1

# 15.1 Self Diagnosis of Problems

## 15.1.1 Procedure for Checking When a Problem Occurs

Q

- What is the procedure for checking when a trip or other problem occurs?

- If a trip or a warning has occurred, or has not occurred but the display is unusual, or the unit does not operate as intended, follow the steps below to troubleshoot.

| Descriptions of the trouble | Reference section |
|---|---|
| ✓ When a trip occurs and an error such as "E051" is displayed on the keypad. | Refer to "15.2 Troubleshooting for Protection Functions Related Error" to resolve the cause. |
| ✓ When a warning occurs and a warning such as "H001" is displayed on the keypad. | Refer to "15.3.1 Warning Display" to resolve the cause. |
| ✓ When the keypad displays something unusual or unfamiliar. | Refer to "15.3.2 Other Displays" to resolve the cause. |
| ✓ When not trip, warning, or other indication above, but does not operate as follows.<br>"Some parameters are not displayed"<br>"Cannot change the setting"<br>"Inverter does not start even if RUN/frequency command is given"<br>"Inverter can run, but the frequency does not increase"<br>"Motor vibrations and disturbances" and so on. | Refer to "15.4 How to Check When Something Is Wrong" to resolve the cause. |

If the problem cannot be solved!

Please contact your supplier or local Hitachi sales office.
Before making an inquiry, please check the following information.

(1) Inverter model
(2) Manufacturing number (MFG No.)
(3) Date of purchase
(4) Content of the inquiry

# 15.2 Troubleshooting for Protection Functions Related Error

## 15.2.1 Checking Trip Information

**Q**

- How to know the detailed information when a trip occurred in the inverter?

**A**

- When the inverter detects an abnormality, the inverter shuts off the output and displays an error code. Alarm LED [AL] on the keypad also lights. In addition, by rotating the JOG dial as shown in the figure below, detailed information such as the output frequency, current, and DC bus voltage at trip can be referred to.
- Detailed information at trip can be monitored by "Trip monitor 1 to 6" ([d081] to [d086]).
- To release the trip (reset), press (a) [STOP/RESET] key, (b) ON-->OFF the "reset [RS] (18)" assigned to the input terminal, or (c) turn on the inverter again. (Some error factors cannot be reset by (a) and (b). For details, refer to the countermeasures for each error.)

| Code | Item | Description | Data |
|---|---|---|---|
| [d080] | Trip count monitor | Displays the number of times the inverter has tripped. | 0 to 65535 (times) |
| [d081] to [d086] | Trip monitor 1 to 6 | Displays trip factor, output frequency (Hz), output current (A), DC bus voltage (VDC), accumulated RUN time (hr), and accumulated power-on time (hr) at the latest 6 trips. [d081] is the latest trip information. | - |

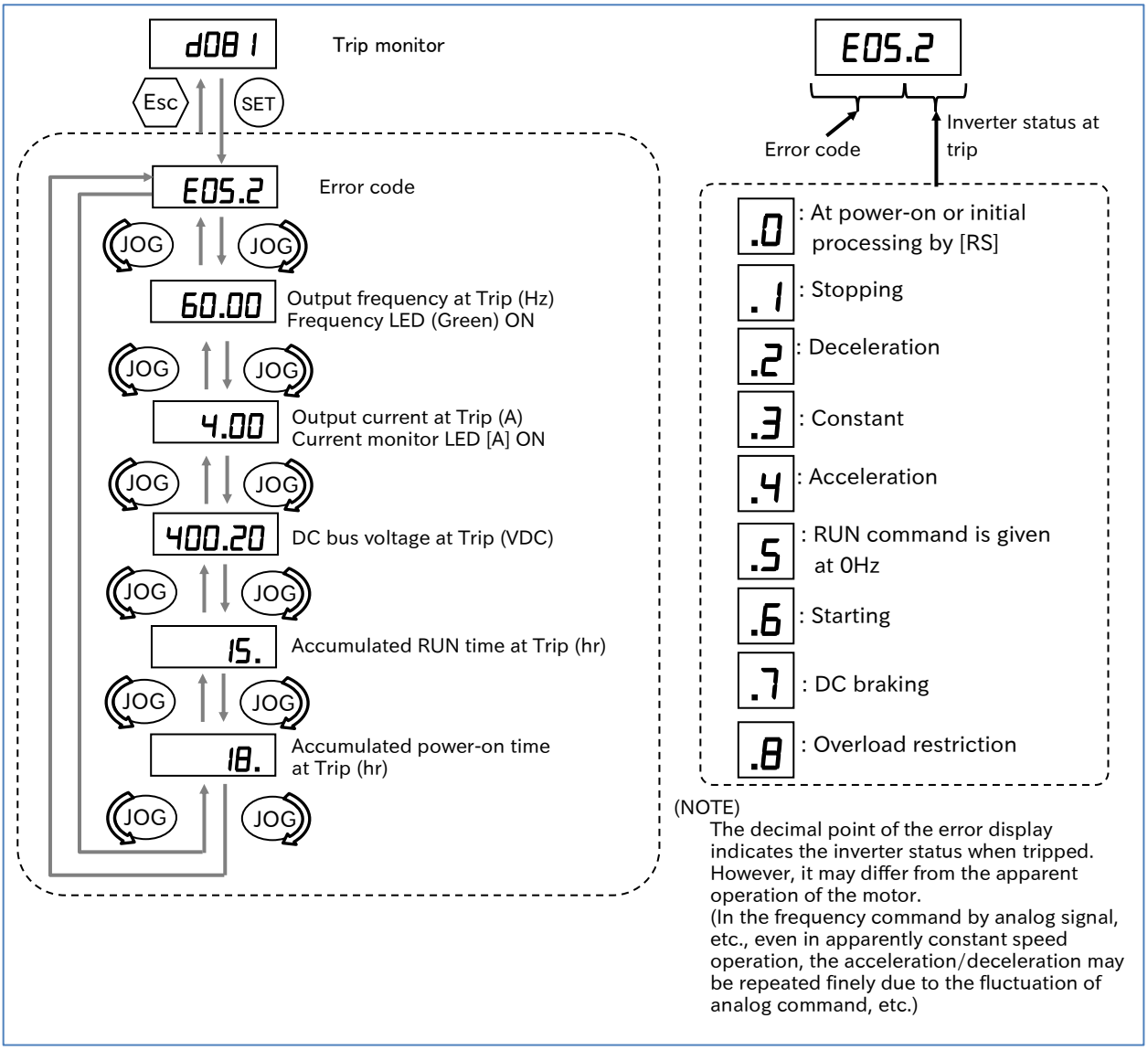

## 15.2.2 Error Code List and Countermeasures

### List of error codes, descriptions, possible causes, and countermeasures

| Error code | Name | Description | | Possible causes and countermeasures | Page |
|---|---|---|---|---|---|
| E01.* | Over current error | If the motor is fixed or rapidly accelerated or decelerated, a large current flows through the inverter, which may cause a failure. For this reason, the protection circuit operates and trips at approximately 200% of the inverter rated output current. | Constant speed | Is there a steep load change?<br>→ Eliminate load fluctuation.<br>Is there an output short circuit?<br>→ Check the output line.<br>Is there a ground fault?<br>→ Check the output wires and motor. | 9-3-1<br>9-5-5 |
| E02.* | | | During deceleration | Rapid deceleration → Increase the deceleration time. | |
| E03.* | | | During acceleration | Rapid acceleration<br>→ Increase the acceleration time.<br>Is motor locked?<br>→ Check the motor and wiring.<br>Is the torque boost high?<br>→ Decrease the boost value. | |
| E04.* | | | Other | Is DC braking high?<br>→ Decrease the DC braking force. | 9-7-2<br>9-7-14 |
| E05.* | Overload error*1 | The built-in electronic thermal function monitors the output current of the inverter and when an overload is detected, the inverter trips.<br>When "Electronic thermal decrease function enable [b910]" ≠ 00, it operates as motor overload protection. | | Is the acceleration torque insufficient?<br>→ Increase the acceleration time.<br>Is the load too heavy?<br>→ Lower the load factor.<br>Is thermal level correct?<br>→ Set to the proper level. | 9-3-1<br>8-1-8 |
| E06.* | Braking resistor overload error | When the use ratio of inverter's braking resistor operation circuit (BRD) exceeds the use ratio set in [b090], the inverter trips. | | Is it decelerating rapidly?<br>→ Increase the deceleration time.<br>Is the operation cycle short?<br>→ Increase the operating cycle. | 9-3-1<br>9-9-8 |
| E07.* | Overvoltage error | Too high voltage between P and N terminals results in a failure. Therefore, if the voltage between P and N terminals exceeds approx. 400 VDC (200 V class) or 800 VDC (400 V class) due to regenerative energy from the motor or an increase in the power supply voltage, the inverter trips. | | Is it decelerating rapidly?<br>→ Increase the deceleration time.<br>Is there a ground fault?<br>→ Check the output wires and motor.<br>Is the motor rotated from the load side?<br>→ Reduce the regeneration amount.<br>Is the power supply voltage rising?<br>→ Lower the power supply voltage, suppress power fluctuations, or insert an AC reactor into the input. | 9-3-1 |
| E08.* | Memory error*2 | When an error occurs in the built-in memory due to external noise or abnormal temperature rise, etc., the inverter trips. (In some cases, a CPU error will occur.) | | Is there a large noise source nearby?<br>→ Noise suppression.<br>Is the cooling efficiency lowered?<br>→ Check for clogging of the cooling fins and clean it, and replace the cooling fans. | 1-3-3 |

*1. When it is not in the subtraction mode ([b910] = 00), the reset operation is not accepted until 10 seconds have elapsed after a trip occurs.
In the subtraction mode ([b910] ≠ 00), resetting is possible immediately after a trip occurs, but the accumulated overload value is not cleared. Therefore, if restarting immediately after reset, the accumulated overload may immediately reach 100% and [E05] trip may occur again. In this case, wait a while before restarting.

*2. When these errors occur, the reset operation is not accepted. Turn off the power once. If the same error occurs the next time the power is turned on, there is a possibility of failure. Please contact your supplier or local Hitachi sales office.

| Error code | Name | Description | Possible causes and countermeasures | Page |
|---|---|---|---|---|
| E09.* | Undervoltage error | When the power supply voltage drops, the control circuit will not function properly. Therefore, when the power supply voltage falls below approx. 172.5 VDC (200 V class/345 VDC (400 VDC), the output will be shut off (during undervoltage wait). After that, when the power supply is restored, the inverter trips. The timing of the trip depends on the "Restart mode selection after instantaneous power failure/undervoltage error [b001]" and "Instantaneous power failure/undervoltage allowable time [b002]" settings. In addition, if undervoltage wait time becomes more than 40 seconds, the inverter trips without waiting for power supply restoration. | Power supply voltage is not dropped?<br>→ Check the power supply.<br>Is the power supply capacity insufficient?<br>→ Check the power supply.<br>Is there any aging degradation of the smoothing capacitor?<br>→ See "16.2.5 Smoothing Capacitor Life Curve" | 16-2-5 |
| E10.* | Current detector error | When the built-in current detector has problems, the inverter trips. | Inverter failure.<br>→ Repair. | - |
| E11.* | CPU error*2 | When a malfunction or problem occurs in the built-in CPU, the inverter trips. In addition, when an abnormal value is read from the internal memory, a CPU error may occur. | Is there a large noise source nearby?<br>→ Noise suppression.<br>Inverter failure.<br>→ Repair. | 1-3-3 |
| E12.* | External trip error | When the input terminal to which "External fault [EXT]" is assigned turns on, the inverter trips. | Is input signal normal?<br>→ Check the external input device and wiring.<br>Is there a large noise source nearby?<br>→ Noise suppression. | 9-10-3 |
| E13.* | USP error | When the power supply is turned on while the RUN command is being given to the inverter, the inverter trips.<br>(Only when USP function is selected) | Is the power supply turned on with the RUN command input?<br>→ Check the operation signal. | 9-10-4 |
| E14.* | Ground fault*2 | When the power is turned on and the ground fault between the output section of the inverter and the motor is detected, the inverter trips. (This function does not operate if residual voltage remains in the motor.) Enable/disable of error detection can be selected in "Detect ground fault selection [b098]". | Is there a ground fault?<br>→ Check the output wires and motor.<br>Is there any abnormality in the inverter alone?<br>→ Disconnect and check the output wires.<br>Is there any abnormality in the main circuit part?<br>→ Check the main circuit. (Refer to "16.2 Daily Inspection and Periodic Inspection".) | 16-1-1 |

*2. When these errors occur, the reset operation is not accepted. Turn off the power once. If the same error occurs the next time the power is turned on, there is a possibility of failure. Please contact your supplier or local Hitachi sales office.

| Error code | Name | Description | Possible causes and countermeasures | Page |
|---|---|---|---|---|
| E15.* | Power supply overvoltage error | When the overvoltage condition of the power supply voltage continues for 100 seconds while the inverter is stopped, the inverter trips. The overvoltage detection value of the P-N voltage is approx. 390 VDC (200 V class) or 780 VDC (400 V class). | Is the power supply voltage too high?<br>→ Decrease the power supply voltage.<br>→ Suppress power supply fluctuations.<br>→ Insert an AC reactor into the input. | - |
| E19.* | Temperature detection error | When the cooling fin temperature detection system is judged to be abnormal such as broken wire, the inverter trips. | Inverter failure.<br>→ Repair. | - |
| E21.* | Cooling fin temperature error | When the main circuit part temperature exceeds the specified value for reasons such as high ambient temperature, the inverter trips. | Is the inverter mounted vertically?<br>→ Check the installation.<br>Is the ambient temperature too high?<br>→ Lower the temperature.<br>Is the cooling fan not stopped?<br>→ Set "Cooling fan control method selection [b092]" to "Always (00)".<br>→ Check the power supply of the cooling fan.<br>Is the cooling fin clogged?<br>→ Clean the fin. | 4-1-1<br>9-10-6<br>9-11-6<br>16-2-2 |
| E22.* | CPU communication error | When a malfunction or abnormality occurs in the communication of the built-in CPU, the inverter trips. | Is there a large noise source nearby?<br>→ Noise suppression.<br>Inverter failure.<br>→ Repair. | 1-3-3 |
| E25.* | Main circuit error | When a problem occurs in the main circuit board, the inverter trips. | Is there a large noise source nearby?<br>→ Noise suppression.<br>Inverter failure.<br>→ Repair. | - |
| E26.* | Analog current input error | When an excessive current flows through the analog current input terminal [Ai2], the inverter trips. | Is [Ai2] wiring short-circuited or incorrect wiring?<br>→ Check the wiring.<br>Control circuit board failure.<br>→ Repair. | 5-4-4 |
| E30.* | Driver error*2 | When an instantaneous overcurrent occurs, the inverter trips to protect the main element.<br>(This trip does not allow retry operation. The power must be turned on again.) | Is there an output short circuit?<br>→ Check the output line.<br>Is there a ground fault?<br>→ Check the output wires and motor.<br>Is there any damage to the main element?<br>→ Checking IGBT.<br>(See "16.2.4 Checking the Inverter and Converter Section".) | 16-2-4 |
| E35.* | Thermistor error*3 (Motor temperature error) | When the thermistor input [PTC] function is enabled and an abnormal temperature is detected by the resistance value of the external thermistor, the inverter trips. | Is the motor temperature too high?<br>→ Check the temperature.<br>Is there any damage to the thermistor?<br>→ Check the thermistor.<br>Is there noise contamination to the thermistor signal?<br>→ Wiring separation. | 9-10-7 |

*2. When these errors occur, the reset operation is not accepted. Turn off the power once. If the same error occurs the next time the power is turned on, there is a possibility of failure. Please contact your supplier or local Hitachi sales office.
*3. If thermistor is not connected, disconnection or failure while the [PTC] is assigned to the input terminal, E35 will occur again even after resetting. In this case, connect a thermistor or short-circuit between [5]-[L] terminals before turning on the power.

| Error code | Name | Description | Possible causes and countermeasures | Page |
|---|---|---|---|---|
| E36.* | Brake error | When "Brake control enable [b120]" is enabled and ON/OFF of the brake cannot be confirmed within the "Brake confirmation signal wait time [b124]" after the inverter has output a brake releasing signal, the inverter trips. | Is ON/OFF operation of the braking normal?<br>→ Check the brake.<br>Is the setting of [b124] too short?<br>→ Increase the [b124].<br>Is the "Answer back from Brake [BOK]" signal turned on?<br>→ Check wiring. | 9-7-16 |
| E37.* | STO shut-off error | When "STO input operation selection [b145]" is set to "[E37] trip (01)" and either of the [ST1]/[ST2] input terminals is off, the inverter trips. | Is [ST1]/[ST2] incorrectly input?<br>→ Check the wiring and sequence of [ST1]/[ST2] input signals.<br>Is parameter setting correct?<br>→ Check the [b145] setting. | 14-1-1 |
| E38.* | Low-speed range overload error | When an overload occurs in the extremely low speed range of 0.2 Hz or less, the built-in electronic thermal will detect and the inverter trips.<br>(However, high frequency may remain in the error history in some cases.)<br>When "Electronic thermal decrease function enable [b910]" ≠ 00, this error also occurs as overload protection of the inverter. | Is the load too heavy?<br>→ Lower the load factor. | 8-1-8 |
| E40.* | Remote operator communication error | When communication with the optional external remote operator is abnormal or disconnected, the inverter trips. Enable/disable of error detection can be selected in "Operation selection at operator disconnection [b165]". | Is there a communication error?<br>→ Check/replace the cable. | 7-2-11 |
| E41.* | Modbus communication error | When RS485 communication timeout occurs, the inverter trips. Enable/disable of error detection can be selected in "RS485 communication error selection [C076]". | Is the settings of communication baud rate etc. correct?<br>→ Check the settings.<br>Are the length and shield of the wirings appropriate? Also, are wires not broken?<br>→ Check the communication wiring.<br>Is the termination resistor setting correct?<br>→ Check the termination resistor. | 11-1-1<br>11-1-3 |
| E43.* | EzSQ invalid instruction error | When an invalid instruction is detected in EzSQ program, the inverter trips.<br>(EzSQ was executed without downloading the program to the inverter, EzSQ program memory was broken, etc.) | For more information, refer to "Inverter configuration software ProDriveNext instruction manual (NT8001*X)" and "Easy-Sequence Function (EzSQ) Programming Guide (NT2021*X)". | 12-2-1 |
| E44.* | EzSQ nesting count error | When the nesting count exceeds the allowable executed number in EzSQ program, the inverter trips. | | |
| E45.* | EzSQ execution error | When an instruction that cannot be executed is detected in EzSQ program, the inverter trips. | | |
| E50.* to E59.* | EzSQ user-assigned error 0 to 9 | When the corresponding user-assigned tripping programs are executed in EzSQ program, the inverter trips. | | |

| Error code | Name | Description | Possible causes and countermeasures | Page |
|---|---|---|---|---|
| E60.* to E69.* | Option related error | When an error is detected in the mounted option board, the inverter trips. For more information, refer to the instruction manual for the mounted option. | Is the option board connected properly?<br>→ Check connector fitting.<br>Is there a mistake in usage?<br>→ Check the instruction manual for the option. | 13-2-1 |
| E80.* | Encoder disconnection error | When the output frequency is higher than the "Creep speed [P015]" and the encoder detection speed is lower than the "Minimum frequency [b082]" and the "Encoder disconnection timeout [P077]" (≠ 0.0) setting time has elapsed, the inverter trips.<br>In the case of simple positioning, this trip also occurs when the motor rotation speed becomes less than the minimum frequency. | Are there any broken or faulty connections in the encoder wiring?<br>→ Check the encoder wiring.<br>Are the parameter settings correct?<br>→ Increase [P077] and set [P015] to a higher value. | 9-5-17 |
| E81.* | Overspeed error | When the encoder detection speed exceeds "Maximum frequency [A004]" × "Overspeed detection level [P026]" (≠ 0.0) during running, the inverter trips.<br>It does not depend on simple position control or V/f control with FB. | Are there any broken or faulty connections in the encoder wiring?<br>→ Check the encoder wiring.<br>Are the parameter settings correct?<br>→ Check "Output frequency setting or monitor [F001]".<br>→ Check "Encoder constant [P011]".<br>Is the actual motor speed higher than the error detection level?<br>→ Check the load status.<br>→ Adjust [P026]. | 9-5-17 |
| E83.* | Position control range error | When the current position counter exceeds the position control range specification ([P072] and [P073]) during simple position control, the inverter trips. | Is the current position and home position correct?<br>→ Check [P072] and [P073].<br>→ Check [P060] to [P067].<br>→ Check the home position. | 9-14-1 |
| E98.* | ST1/ST2 mismatch error | When "STO input operation selection [b145]" is 02 and there is a mismatch in the [ST1]/[ST2] input signal status, the inverter trips. | Is [ST1]/[ST2] incorrectly input?<br>→ Check [ST1]/[ST2] input signal wiring and perform function tests.<br>Is parameter setting correct?<br>→ Check the [b145] setting. | 14-1-4 |
| E99.* | STO internal failure error *2 | When a failure is detected in the STO input status or in the safety path inside WJ-C1, the inverter trips regardless of [b145] setting. | Is the safety function working properly?<br>→ Perform function tests.<br>Failure in the internal safety path.<br>→ Repair. | - |

*2. When these errors occur, the reset operation is not accepted. Turn off the power once. If the same error occurs the next time the power is turned on, there is a possibility of failure. Please contact your supplier or local Hitachi sales office.

# 15.3 Troubleshooting for Warning Functions Related Error

## 15.3.1 Warning Display

**Q**

- How to know the cause of the warning and troubleshooting when a warning occurs?

**A**

- If the set parameter is inconsistent with another set value, a warning is displayed and the program LED [PRG] blinks.
- Warning displays and their conditions are shown below. If a warning is displayed, correct the parameter referring to the contents of the table. (Even if RUN command is given, it is not automatically rewritten to the correct value.)
- The latest warning message is stored in "Warning monitor [d090]". If no warning has occurred, "H000" is displayed.

| Warning display | Warning display condition | | |
|---|---|---|---|
| H001 | Upper frequency limit, 1st-motor [A061] | > | Maximum frequency, 1st-motor [A004] |
| H002 | Lower frequency limit, 1st-motor [A062] | > | Maximum frequency, 1st-motor [A004] |
| H005 | Output frequency setting or monitor [F001], Multi-speed 0, 1st-motor [A020] | > | Maximum frequency, 1st-motor [A004] |
| H015 | Output frequency setting or monitor [F001], Multi-speed 0, 1st-motor [A020] | > | Upper frequency limit, 1st-motor [A061] |
| H025 | Lower frequency limit, 1st-motor [A062] | > | Output frequency setting or monitor [F001], Multi-speed 0, 1st-motor [A020] |
| H031 | Minimum frequency adjustment [b082] | > | Upper frequency limit, 1st-motor [A061] |
| H032 | Minimum frequency adjustment [b082] | > | Lower frequency limit, 1st-motor [A062] |
| H035 | Minimum frequency adjustment [b082] | > | Output frequency setting or monitor [F001], Multi-speed 0, 1st-motor [A020] |
| H037 | Minimum frequency adjustment [b082] | > | Jogging frequency [A038] |
| H085 | Output frequency setting or monitor [F001], Multi-speed 0, 1st-motor [A020] | = | Jump frequency ± Jump frequency width ([A063] ± [A064], [A065] ± [A066], [A067] ± [A068])*1 |
| H085 | Multi-speed 1 to 15 [A021] to [A035] | = | |
| H091 | Free-V/f frequency 7 [b112] | < | Upper frequency limit, 1st-motor [A061] |
| H092 | Free-V/f frequency 7 [b112] | < | Lower frequency limit, 1st-motor [A062] |
| H095 | Free-V/f frequency 7 [b112] | < | Output frequency setting or monitor [F001], Multi-speed 0, 1st-motor [A020] |
| H201 | Upper Frequency limit, 2nd-motor [A261] | > | Maximum frequency, 2nd-motor [A204] |
| H202 | Lower Frequency limit, 2nd-motor [A262] | > | Maximum frequency, 2nd-motor [A204] |
| H205 | Output frequency [F001], 2nd multi-speed 0-speed [A220] | > | Maximum frequency, 2nd-motor [A204] |
| H215 | Output frequency [F001], 2nd multi-speed 0-speed [A220] | > | Upper Frequency limit, 2nd-motor [A261] |
| H225 | Lower Frequency limit, 2nd-motor [A262] | > | Output frequency [F001], 2nd multi-speed 0-speed [A220] |
| H231 | Minimum frequency adjustment [b082] | > | Upper Frequency limit, 2nd-motor [A261] |
| H232 | Minimum frequency adjustment [b082] | > | Lower Frequency limit, 2nd-motor [A262] |
| H235 | Minimum frequency adjustment [b082] | > | Output frequency [F001], multi-speed 0-speed [A220] |
| H285 | Output frequency [F001], 2nd multi-speed 0-speed [A220] | = | Jump frequency ± Jump frequency width ([A063] ± [A064], [A065] ± [A066], [A067] ± [A068])*1 |
| H291 | Free-V/f frequency 7 [b112] | < | Upper Frequency limit, 2nd-motor [A261] |
| H292 | Free-V/f frequency 7 [b112] | < | Lower Frequency limit, 2nd-motor [A262] |
| H295 | Free-V/f frequency 7 [b112] | < | Output frequency [F001], 2nd multi-speed 0-speed [A220] |

*1. A warning occurs when the frequency settings of [F001], [A020], [A220], [A021] to [A035] are within the frequency range set in the jump frequency.

## 15.3.2 Other Displays

**Q**

- Are there any other displays of the keypad other than when a trip occurs or a warning occurs?

**A**

- During resetting, undervoltage condition, or waiting for the retry by the restart function, the keypad is displayed as follows.

| Name | Description | Display |
|---|---|---|
| During resetting | Displayed during resetting (when the "Reset [RS]" input terminal is turned on, or when the trip status is reset by the [STOP/RESET] key). | Rotate SSSSS |
| During undervoltage wait | Displayed during undervoltage wait and power shut down. | - - - - - |
| 24 VDC power is being supplied | Displayed when operating on 24 VDC power only. | 24u |
| Restart after instantaneous power failure<br>Restart at trip | Displayed during restart function operation. | ooooo |
| During RUN command restriction | Displayed when the restricted direction RUN command is input while the operation direction is restricted by the "RUN direction restriction selection [b035]". | ooooo |
| During data initializing | Displayed during data initialization when "Pattern 0" is set in "Initialization selection [b085]". | ', 00 |
| | Displayed during data initialization when "Pattern 1" is set in "Initialization selection [b085]". | ', 01 |
| During trip history initialization | Displayed during initialization of trip history. | ', HC |
| No data | Displayed when the relevant data is not found. (Trip monitor) | - - - - - |
| Communication error | Displayed when a problem occurs between the external digital operator and the inverter. | Blink - - - - - |
| Auto-tuning OK | Displayed when auto-tuning ends normally. | - - - - 0 |
| Auto-tuning NG | Displayed when auto-tuning fails. | - - - - J |
| Output shut-off by safety function STO | Displayed when "STO input mode selection [b145]" is any of 02 to 06 and both [ST1]/[ST2] are opened and the inverter output is shut-off by STO. | -S-- |
| Functional safety ST1/ST2 mismatch | Displayed when "STO input mode selection [b145]" is 05 or 06 and switching to normal operation ⇔ output shut-off by STO. One of [-F01]/[-F02]/[-F10]/[-F20] is displayed depending on ON/OFF timing of [ST1]/[ST2].<br>Refer to "14.1 Using the Safety Function STO (Safe Torque Off)" for more information. | -F01<br>-F02<br>-F10<br>-F20 |

# 15.4 How to Check When Something Is Wrong

## 15.4.1 Troubleshooting Other Than Trip and Warning

Q

- What to do if something is wrong?
- What to do if the inverter does not operate as expected?
- What to do if there is no problem with the inverter, but it does not work well?

A

- Examples of troubleshooting to be taken when the inverter is not tripped but does not operate as expected are listed below. If there is a phenomenon corresponds to the "Problem" column, please check each section described in the "Reference" column or the countermeasures described from the next page.
- If the problem cannot be solved by checking the following items, please contact your supplier or local Hitachi sales office.

| | Problem | Reference |
|---|---|---|
| 1 | A trip or warning has occurred. The display of the keypad is different from normal. | Refer to "15.2 Troubleshooting for Protection Functions Related Error" and "15.3 Troubleshooting for Warning Functions Related Error" to cancel the cause of tripping or warning. |
| 2 | Keypad does not light up when the main power is turned on (the power LED [PWR] does not light). | Check "S1: Power does not turn on (Power LED [PWR] on the main unit does not light up)". |
| 3 | The running LED [RUN] on the keypad does not light up when RUN command is given. | Check "S2: RUN command setting or RUN command is incorrect". |
| 4 | When RUN command is given, the running LED [RUN] lights up and the unit is in operation status. However, the inverter does not operate with the intended frequency command. (The indication of [F001] is 0 Hz, does not operate at the intended frequency for the analog voltage/current being actually input, etc.) | Check "S3: Frequency command setting or frequency command is incorrect". |
| 5 | RUN command and frequency command are given correctly, but the motor does not drive. | Check "S4: Frequency output shut-off/limit function is working". |
| 6 | The motor is driven but not driven at the intended frequency. (The indication of [F001] is the frequency command actually given, but the motor speed does not become the intended output, the output frequency becomes oscillatory or unstable, etc.) | Check the following according to the situation.<br>"S5: Motor speed does not increase"<br>"S6: Motor rotates in reverse"<br>"S7: Output frequency becomes unstable"<br>"S8: Torque is not generated" |
| 7 | The parameter to be set is not displayed, or the parameter cannot be set. | Check "S9: Parameters to be set are not displayed" or "S10: Keypad cannot be operated or parameters cannot be set". |
| 8 | Problems other than the above are occurring. | Check "S11: Noises of motor and machine are noisy" and later to solve the problem. If the problem still persists, please contact your supplier or local Hitachi inverter sales office. |

## S1: Power does not turn on (Power LED [PWR] on the main unit does not light up)

| Estimated cause (s) ▶ | Exemplar measures to be taken | Page |
|---|---|---|
| Power is not turned on. | Check that the power supply that meets the specifications is input to the inverter power input side. | 17-1-1 |
| The short-circuit bar or the DC link choke between [P+] and [PD/+1] terminals is disconnected. | Connect the short-circuit bar or the DC link choke between the terminals correctly. | 5-2-1 |
| The power input wiring is broken or the connection terminal is loose. | Review the wiring condition. | - |
| External 24 VDC is being input, but the main power is not being input. | When an external 24 VDC is input, the parameter setting can be changed, but the motor cannot be driven. Input the main circuit power supply. | 5-2-1<br>5-4-5 |

## S2: RUN command setting or RUN command is incorrect

| Estimated cause (s) ▶ | Exemplar measures to be taken | Page |
|---|---|---|
| Even if RUN command is given, the motor does not drive. | RUN command is not recognized if the running LED [RUN] of the keypad does not light up when inputting RUN command. Check the contents of this table. | - |
| Although the desired operation is driving the motor by the RUN-key on the keypad, the settings etc. are incorrect. | Make sure that "Keypad (RUN-key) (02)" is set in the "RUN command input source selection [A002][*1]". The LED on the right side of the RUN-key is lit when the inverter can be operated with the RUN-key on the keypad. | 9-1-2 |
| | STOP/RESET-key on the keypad can be enabled or disabled using the "STOP/RESET-key enable [b087]". Check this parameter. | 9-1-8 |
| Although the desired operation is driving the motor by the [FW]/[RV] input terminals or the [STA]/[STP]/[F/R] input terminals, the settings etc. are incorrect. | Make sure that "Control terminal (01)" is set in the "RUN command input source selection [A002][*1]". | 9-1-3<br>9-1-4 |
| | When RUN command is given via the [FW]/[RV] input terminals, turn on either of them. (When both are ON, it is judged as a stop command.) | 9-1-3 |
| | Check if the setting of [C001] to [C007] and [C011] to [C017] are correct. | 9-15-1 |
| | Use "Input terminal monitor [d005]" to monitor the status of the input terminals and check that there is no problem with the wiring. | 10-2-1 |
| "Forced operation [F-OP]" input terminal or "Forced terminal [F-TM]" input terminal is ON. | If the "Forced operation [F-OP]" and "Forced terminal [F-TM]" functions are not required, turn those inputs OFF. | 9-1-7<br>9-2-21 |
| Settings other than the above or wiring etc. are incorrect. | Check the "RUN command input source selection [A002][*1]" settings, input terminal function assignment settings, and wiring. Refer to "9.1 Selecting RUN Command and Alarm Reset" for more information. | - |

## S3: Frequency command setting or frequency command is incorrect

| Estimated cause (s) ▶ | Exemplar measures to be taken | Page |
|---|---|---|
| Frequency command is not recognized. | If the frequency command setting cannot be changed with [F001] or the set frequency command is not displayed in [F001], the frequency command is not recognized correctly. Check the contents of this table. | - |
| The frequency command input source is incorrect. | Check that the "Frequency input source selection [A001][*1]" is set correctly. | 9-2-1 |
| The frequency reference is set to 0 Hz. | When the "Frequency input source selection [A001][*1]" is set to "Control terminal (01)", measure the voltage/current input to the [Ai1]/[Ai2] terminals with a tester, etc., and check whether the input voltage/current and wiring are correct. | 5-4-1 |
| | Set the frequency command to [F001] when the "Frequency input source selection [A001][*1]" is "Parameter setting (02)". | 9-2-3 |
| | When performing multi-speed operation ([CF1] to [CF4] or [SF1] to [SF7]), set the frequency commands to [A020]/[A220] to [A035] correctly. | 9-2-7 |
| When the frequency command is an analog or digital command, the motor drives at a value different from the input command value. | Check that the settings such as "Frequency input source selection [A001][*1]", "[AT] selection [A005]", analog start/end function ([A011] to [A016], [A101] to [A105], [A161] to [A165]), and analog adjustment gain ([C081], [C082]) are correct. | 9-2-1<br>9-2-4<br>9-15-4 |
| "Forced operation [F-OP]" input terminal or "Forced terminal [F-TM]" input terminal is ON. | If the "Forced command switching [F-OP]" and "Forced terminal [F-TM]" functions are not required, turn those inputs OFF. | 9-1-7<br>9-2-21 |
| Main circuit wiring is broken or incorrect. | Check that there is no disconnection or incorrect connection in the main circuit wiring. | - |
| Settings other than the above or wiring etc. are incorrect. | Check that the function assignment and wiring of the control terminals are correct. For details, refer to "9.2 Selecting Frequency Command". | - |

## S4: Frequency output shut-off/limit function is working

| Estimated cause (s) ▶ | Exemplar measures to be taken | Page |
|---|---|---|
| "Reset [RS]" input terminal is ON. | If the [RS] terminal is ON, the inverter enters the reset status and RUN command is not accepted. The [RS] terminal needs to be turned OFF. | 9-1-9 |
| "Free run stop [FRS]" input terminal is ON. | If the [FRS] terminal is ON, the inverter enters the free run stop mode and RUN command is not accepted. The [FRS] terminal needs to be turned OFF. | 9-7-10 |
| "Commercial power supply change [CS]" input terminal is ON. | If the [CS] terminal is ON, the inverter enters the mode switched to commercial power supply shut-off and RUN command is not accepted. Check the commercial switching function. | 9-7-15 |
| "RUN enable [REN]" input terminal has been assigned and is turned OFF. | When the [REN] terminal is used, RUN command is not accepted if the terminal is OFF. Check the RUN enable signal. | 9-4-4 |
| "RUN direction restriction selection [b035]" is set. | Set [b035] correctly. | 9-4-2 |
| "Direction reversal protection selection [b046]" is set. | Set [b046] correctly. | 9-4-3 |
| The short-circuit wire of the [ST1]/[ST2] input terminals of the functional safety is disconnected or the terminals are turned OFF. | The [ST1]/[ST2] input terminals are functional safety terminals. When this function is not used, the short-circuit wire must be connected. | 14-1-2 |
| Wirings, etc. are incorrect or broken. | Check the output wires to the motor and the inside of the motor for abnormalities such as broken wires. | - |

## S5: Motor speed does not increase

| Estimated cause (s) ▶ | Exemplar measures to be taken | Page |
|---|---|---|
| Overload restriction function or overcurrent suppression function is activated. | The overcurrent suppression function or the overload restriction function limits the output current by stopping acceleration or decreasing the output frequency when the output current exceeds the activation level. It may be improved by increasing the activation level. | 9-9-1<br>9-9-3 |
| The frequency command is limited | If the settings of the upper frequency limit and the maximum frequency are low, it by may be improved by increasing the setting. When limiting the frequency, use the upper limiter function rather than the maximum frequency. | 9-4-1 |
| The frequency command is low<br>"Jogging [JG]" terminal is ON | If there is a high priority frequency command such as jogging or multi-speed command, the command will be low. The terminal function and frequency command input source must be reviewed. | 9-2-1<br>9-2-7<br>9-2-10 |
| Acceleration time is long | If the acceleration time setting is too long, acceleration becomes slow. Reduce the acceleration time. | 9-3-2 |
| The motor is locked. | If the motor shaft is locked by the brake or something that obstructs motor rotation (e.g. something is clogged), the cause must be removed. | - |

## S6: Motor rotates in reverse

| Estimated cause (s) ▶ | Exemplar measures to be taken | Page |
|---|---|---|
| The wires connected to the motor are in wrong phase sequence. | Swapping the two phases of the wiring to the motor changes the direction of rotation. | - |
| When operating with the RUN-key on the keypad, the rotation direction setting is wrong. | Check the [F004] setting. | 9-1-2 |
| When using the 3-wire function, the input of the [F/R] input terminal is reversed. | Check the logic of "3-wire Forward/Reverse [F/R]". | 9-1-4<br>9-15-1 |
| In the case of sensorless vector control, the motor rotates in reverse momentarily at the low speed range. | Enable "Reverse prevention selection [b046]". | 9-4-3 |

## S7: Output frequency becomes unstable

| Estimated cause (s) ▶ | Exemplar measures to be taken | Page |
|---|---|---|
| Inadequate parameters are used. | Find out the basic parameter settings for the motor and set them accordingly.<br>It may be improved by adjustments such as adjusting the stabilization constant or slightly changing the output frequency from the power supply frequency. | 8-1-5<br>8-1-13<br>9-5-10 |
| The load fluctuates significantly. | Re-examination of capacity of both motor and inverter may be required. | - |
| Power supply voltage fluctuates. | In order to reduce the power supply fluctuation, optional reactor (DCL or ALI) or the input side noise filter may be used. | 5-3-1 |

## S8: Torque is not generated

| Estimated cause (s) ▶ | Exemplar measures to be taken | Page |
|---|---|---|
| Inadequate parameters are used and acceleration torque is not sufficient. | Set the torque boost or switch to sensorless vector control and adjust parameters. | 9-5-5<br>9-5-11 |
| The inverter is used for lowering. | If torque is insufficient in regenerative operation, perform the following adjustment.<br>- Increase the deceleration time.<br>- Set "AVR function selection [A081][*1]" to "Disable (01)".<br>- Use a braking resistor or regenerative braking unit. | 8-1-6<br>9-3-1<br>9-9-6<br>9-9-8 |
| The load is too heavy. | It may be necessary to review the capacity of both the motor and inverter. | - |

## S9: Parameters to be set are not displayed

| Estimated cause (s) ▶ | Exemplar measures to be taken | Page |
|---|---|---|
| Display restriction has been set. | The display restriction function may be activated. Review "Display restriction selection [b037]".<br>If [b037] cannot be changed, the password function may be working. If that case, cancel the password. | 7-2-1<br>7-2-6 |
| The display is fixed. | When the "Display lock [DISP]" input terminal is ON, keypad operation cannot be accepted. If that case, turn off the [DISP] terminal. | 7-2-10 |

## S10: Keypad cannot be operated or parameters cannot be set

| Estimated cause (s) ▶ | Exemplar measures to be taken | Page |
|---|---|---|
| The display is fixed. | When the "Display lock [DISP]" input terminal is ON, keypad operation cannot be accepted. If that case, turn off the [DISP] terminal. | 7-2-10 |
| The inverter is running. | Some parameters cannot be changed during running. If it cannot be changed, stop the inverter once. | 7-1-1 |
| Soft-Lock is activated. | Disable Soft-Lock function. | 7-2-5 |
| The setting range of the parameter, etc. has changed due to the change of the inverter mode or load type setting. | By changing the "Load type selection [b049]" and "Inverter mode selection [b171]", the setting range of some parameters are changed and some parameters are hidden. The current mode setting can be checked on the "Inverter mode monitor [d060]". If the mode is not intended, change the mode. | 8-1-2<br>8-1-15<br>10-3-4 |

## S11: Noises of motor and machine are noisy

| Estimated cause (s) ▸ | Exemplar measures to be taken | Page |
|---|---|---|
| The carrier frequency setting is low. | Increase the "Carrier frequency [b083]". However, this may increase the noise generated in the inverter and leakage current from the inverter. In addition, derating is required to the output current depending on the models. | 9-10-1<br>17-3-1 |
| The rotation frequency of the motor and the natural frequency of the machine resonate. | Change the frequency reference. If a resonance occurs during acceleration/deceleration, avoid the resonance frequency with the jump frequency function [A063] to [A068]. | 9-2-1<br>9-10-5 |
| Motor is overexcited. | Match the base frequency setting and motor rated voltage setting to the motor rating. If not improved, reduce the output voltage gain slightly. Or, adjust the control mode to free V/f characteristics. | 8-1-6<br>9-5-2 |

## S12: Cannot be operated/set by Modbus communication

| Estimated cause (s) ▸ | Exemplar measures to be taken | Page |
|---|---|---|
| The communication parameter setting (station number, communication speed, parity setting) is incorrect or the change has not been reflected. | Check the [C071] to [C078] setting. If it is changed, turn the power OFF and then ON again. | 11-1-1 |
| RUN command input source selection is not "Modbus communication (03)" | Check if "RUN command input source selection [A002] *" is set to "Modbus communication (03)". | 9-1-5 |
| Frequency command selection is not "Modbus communication (03)" | Check that "Modbus communication (03)" is set in "Frequency input source selection [A001]*1". | 9-2-11 |
| Wiring is wrong. | Check that the communication wiring is correctly wired to the [SP]/[SN] terminals. | 11-1-3 |
| The termination resistor is connected incorrectly. | Termination resistors must be connected at both ends of the device connected by RS485 communication. Connect the termination resistors correctly. When WJ-C1 is connected at end communication line, turn on the termination resistor switch. | 11-1-3 |
| There is a lot of noise and a communication error has occurred. | Review the wiring layout, wiring with shielded cables, and grounding to the signal ground. | 1-3-3 |

## S13: The earth leakage circuit breaker is activated as the inverter is operated

| Estimated cause (s) ▸ | Exemplar measures to be taken | Page |
|---|---|---|
| Leakage currents in the inverter are large. | Decrease the carrier frequency setting. | 9-10-1 |
| | Increase the sensitivity current of the earth leakage circuit breaker, or replace the earth leakage circuit breaker with high sensitivity current. | 5-3-1 |

## S14: DC braking does not work

| Estimated cause (s) ▸ | Exemplar measures to be taken | Page |
|---|---|---|
| DC braking force, DC braking time, etc. are not set or incorrect. | Check the settings of DC braking related parameters [A051] to [A058]. | 9-7-2<br>9-7-11 |
| "External DC braking [DB]" is not assigned to the input terminal function. Or, the wiring is wrong. | When activating DC braking by input terminal, confirm that "External DC braking [DB]" is assigned together with the above setting. Also check the wiring of the [DB] input terminal. | 9-7-11<br>9-15-1 |

## S15: Noise is generated in TV, radio or devices near the inverter

| Estimated cause (s) ▸ | Exemplar measures to be taken | Page |
|---|---|---|
| Conductive/radiation noise from the inverter | Locate the inverter wires as far as possible from nearby devices, TVs, radios, etc. | 1-3-3 |
| | Install a radio noise filter (zero-phase reactor (ZCL)) to the power input/output of the inverter. | 5-3-1 |

## S16: Cannot be operated/set by communication option board

| Estimated cause (s) ▸ | Exemplar measures to be taken | Page |
|---|---|---|
| RUN command input source selection or frequency input source selection is not "Option" | Check that "Frequency input source selection [A001]" and "RUN command input source selection [A002][*1]" are set to "Option". | 9-1-6<br>9-2-12 |

## S17: Cannot connect to the inverter configuration software ProDriveNext

| Estimated cause (s) ▸ | Exemplar measures to be taken | Page |
|---|---|---|
| The communication cable is broken or wrong. | Check that there is no disconnection or contact failure at the communication cable or connection terminal, or that the cable specification is correct. | 12-1-1 |

*1. "2nd-motor control [SET]" target parameter. Replace with the 2nd-control parameter if necessary.

(Memo)

16

# Chapter 16 Maintenance and Inspection

This chapter describes how to perform maintenance and inspection on the product.
When performing each work, carefully read "Chapter 1 Safety Instructions/Risks" and the corresponding chapters, and pay attention to safety.

**16.1 Cautions for Maintenance and Inspection ..... 16-1-1**
16.1.1 Daily Inspection ..... 16-1-2
16.1.2 Cleaning ..... 16-1-2
16.1.3 Periodic Inspection ..... 16-1-2
16.1.4 Periodic Function Test for Safety Function (STO) ..... 16-1-2
**16.2 Daily Inspection and Periodic Inspection ..... 16-2-1**
16.2.1 Inverter Inspection List ..... 16-2-1
16.2.2 Megger® Test ..... 16-2-3
16.2.3 Withstand Voltage Test ..... 16-2-3
16.2.4 Checking the Inverter and Converter Section ..... 16-2-4
16.2.5 Smoothing Capacitor Life Curve ..... 16-2-5
16.2.6 Life Warning Output ..... 16-2-5
16.2.7 Measurement Methods of I/O Voltage, Current, and Power ..... 16-2-6

# 16.1 Cautions for Maintenance and Inspection

## DANGER

| | |
|---|---|
| Electric shock | ● Risk of electric shock! |
| Do | • Before inspecting the inverter, be sure to turn off the power supply and wait for 10 minutes or more.<br>• (Confirm that the charge lamp on the inverter is turned off and the DC voltage between terminals [P/+] and [N/-] is 45 VDC or less.) |
| Prohibited | • Entrust only a designated person for maintenance, inspection, and replacement of parts.<br>• (Be sure to remove wristwatches and metal accessories, e.g., bracelets, before maintenance and inspection work. Be sure to use insulated tools for the work.) |
| Prohibited | • Do not perform withstand voltage test. |

## DANGER

| | |
|---|---|
| Electric shock Fire Injury | ● Risk of electric shock, fire and injury! |
| Prohibited | • Never modify the unit. |

## 16.1.1 Daily Inspection

- Check that the following abnormalities are not observed during operation.

| No. | Description | ☑ |
|---|---|---|
| 1 | Motor operation is not abnormal. | ☐ |
| 2 | There is no abnormality in the environment where the device is installed. | ☐ |
| 3 | There is no abnormality in the cooling system. | ☐ |
| 4 | No abnormal vibration or sound is observed. | ☐ |
| 5 | No abnormal overheat or discoloration is observed. | ☐ |
| 6 | No abnormal smell is observed. | ☐ |

- While the inverter is running, check the input voltage of inverter using a multimeter, etc.

| No. | Description | ☑ |
|---|---|---|
| 1 | There is no frequent occurrence of variation of power supply voltage. | ☐ |
| 2 | Three-phase AC voltage keeps a good balance. | ☐ |

## 16.1.2 Cleaning

- Keep the inverter in a clean condition.

| No. | Description | ☑ |
|---|---|---|
| 1 | When cleaning the inverter, use a soft cloth soaked in neutral detergent to gently wipe up the dirtied parts. | ☐ |
| 2 | Do not use solvents such as acetone, benzene, toluene, or alcohol as they may melt the surface or strip the coating of the inverter. | ☐ |
| 3 | Do not use detergents or alcoholic cleaners to clean the keypad displays. | ☐ |

## 16.1.3 Periodic Inspection

- Check sections that cannot be inspected unless operation is stopped and sections requiring periodic inspection.
- Please contact your supplier or local Hitachi inverter sales office for periodic inspection.

| No. | Description | ☑ |
|---|---|---|
| 1 | Check that there is no abnormality in the cooling system and clean the air filter, etc. | ☐ |
| 2 | Check the tightness and retighten if necessary.<br>Due to effects of vibration or temperature change, tightened portions of screws or bolts may loosen. Make sure to carefully check and perform the work. | ☐ |
| 3 | No corrosion or damage is observed on the conductors and insulators. | ☐ |
| 4 | Measurement of insulation resistance | ☐ |
| 5 | Check cooling fan, smoothing capacitor and relay.<br>If there is an abnormality in the cooling fan, the cooling fan needs to be replaced. If there is an abnormality in the smoothing capacitor or relay, the inverter needs to be replaced. | ☐ |

## 16.1.4 Periodic Function Test for Safety Function (STO)

- When handling the WJ-C1 as a functional safety certified product, be sure to perform the following items. For details, refer to the separate volume "WJ series C1 Safety Function Guide (NT3612*X)".
- A periodical STO functional test must be performed at least once in a year to maintain the intended safety performance level of the STO function. This periodical STO function test is one of the conditions for the STO function of WJ-C1 to meet PL e of EN ISO 13849-1 and SIL 3 of EN 61800-5-2.

# 16.2 Daily Inspection and Periodic Inspection

## 16.2.1 Inverter Inspection List

| Inspected part | Inspected entry | Details of inspection | Inspection cycle | | | Inspection method | Criterion | Tester device |
|---|---|---|---|---|---|---|---|---|
| | | | Daily | Every | | | | |
| | | | | 1 year | 2 years | | | |
| General | Surrounding environment | Check the ambient temperature, level of humidity, dust, ··· etc.. | ✓ | | | Refer to "Chapter 4 Installation". | The ambient temperature and level of humidity are within the operating range.<br>There are no freeze, condensation, dust, corrosive gas, explosive gas, flammable gas, grinding fluid mist, hydrogen sulfide and salt. | Thermometer, Hygrometer, Data logger |
| | Whole inverter | Check that there are no abnormal vibrations or noises. | ✓ | | | Check visually and auditorily. | No abnormality. | |
| | Power supply voltage | Check that the main circuit voltage is normal. | ✓ | | | Measure the line-to-line voltage of the inverter main circuit terminals [R/L1], [S/L2], and [T/L3]. | Within the allowable AC voltage fluctuation. | Multimeter, Digital multimeter |
| Main circuit | General check | Check the resistance between the main circuit and the ground terminals. (between main circuit and ground terminals) | | ✓ | | Remove all wires from the main circuit terminal block and control circuit terminal block of the inverter. Then, shortcircuit the terminals [R/L1], [S/L2], [T/L3], [U/T1], [V/T2], [W/T3], [P/+], [PD/+1], [N/-] and [RB], and measure between this shortcircuited part and the ground terminal. | Resistance no less than 5 MΩ. | 500 VDC class ohmmeter (megger®) |
| | | Check looseness in tightening parts. | | ✓ | | Check tighten. | No abnormality. | |
| | | Check for overheating traces. | | ✓ | | Check visually. | No abnormality. | |
| | Conductors and cables | Check for straining in conductors. | | ✓ | | Check visually. | No abnormality. | |
| | | Check for cable coating damage. | | ✓ | | | | |
| | Terminal block | Check for any damage. | | ✓ | | Check visually. | No abnormality. | |
| | Inverter and converter circuits (including resistors) | Check the resistance between all the terminals. | | | ✓ | Remove all wires from the main circuit terminal block of the inverter. Then measure between [R/L1]/[S/L2]/[T/L3] - [P/+]/[N/-], and between [U/T1]/[V/T2]/[W/T3] - [P/+]/[N/-] in the 1 Ω range. | Refer to "16.2.4 Checking the Inverter and Converter Section". Reference for replacement of the inverter ank converter Start/Stop: $10^6$ cycles*3 | Analog multimeter |
| | Smoothing capacitor | Check for capacitor fluid leakage. | ✓ | | | Check visually. | No abnormality. Approximate replacement period: 10 years*1*3*4 | |
| | | Check that the relief valve does not swell or protude. | | ✓ | | | | |
| | Relay | No chatter sound while operating. | | ✓ | | Check auditorily. | No abnormality. | |
| | | Check contacts for damage. | | ✓ | | Check visually. | No abnormality. | |

| Inspected part | Inspected entry | Details of inspection | Inspection cycle | | | Inspection method | Criterion | Tester device |
|---|---|---|---|---|---|---|---|---|
| | | | Daily | Every 1 year | Every 2 years | | | |
| Control circuit<br>Protection circuit | Operation check | While performing a unit operation of the inverter, check the balance of the output voltage among the individual phases. | | ✓ | | Measure the line voltages between the [U/T1], [V/T2], and [W/T3] terminals of the inverter main circuit. | Phase-to-phase voltage balance<br>200 V class: within 4 V<br>400 V class: within 8 V | Digital multimeter, Ammeter, Voltmeter |
| | | Carry out a sequential protection test, and check the protective and display circuits for any abnormality. | | ✓ | | Simulate a shortcircuit or open of the inverter output protection circuit. | An error must be detected according to the sequence. | |
| Cooling system | Cooling fan | Check that there are no abnormal vibrations or noises. | ✓ | | | Check auditorily and visually. | Smooth operation. No abnormality. Wind flows to the top.<br>Approximate replacement period:<br>10 years*2*3*5 | |
| | | Check for loose connections. | | ✓ | | Check visually. | | |
| | Cooling fin | Check for obstrutions/ clogging. | | ✓ | | Check visually. | No clogging. | |
| Display | Display | Check if the charge lamp and the keypad's LEDs light up. | ✓ | | | Check visually. | Check the lighting. | |
| | | Display cleaning. | | ✓ | | With cleaning rag. | | |
| | External meter | Check that Indicated values are normal. | ✓ | | | Check the meters readings on the control panel. | Regulation and control value are satisfactory. | Voltmeter, Ammeter, etc. |
| Motor | General | Check that there are no abnormal vibrations or noises. | ✓ | | | Check visually,auditorily, and by touch. | No abnormality. | |
| | | Check that there is no odour. | ✓ | | | Check for abnormal superheating, damages and so on. | No abnormality. | |
| | Insulation resistance | Check the resistance between the main circuit and the ground terminals. | | | *6 | Remove the wiring from the main circuit terminals [U/T1], [V/T2] and [W/T3] of the inverter, shortcircuit the motor wire (for 3 phases), and measure with a megger® between the motor wire andthe ground terminal. | No less than 5 MΩ. | 500 VDC class ohmmeter (megger®) |

*1. The life span of the smoothing capacitor is influenced by the ambient temperature. Refer to "16.2.5 Smoothing Capacitor Life Curve" for replacing measures.
*2. The life span of the cooling fan is influenced by the ambient temperature, the dirt and the change in its environmental conditions. Check these circumstances on the usual inspection.
*3. The estimated time before replacement (Number of years/cycle) and the "16.2.5 Smoothing Capacitor Life Curve" are based on the design lifespan, not guaranteed.
*4. In case using an inverter with a long storage period, perform the following aging before use. (Aging is not required if the storage temperature is 5 to 35 ˚C and within 2 years.)
- If the input voltage can be adjusted: Input about 150 VAC for 200 V class and about 300 VAC for 400 V class for about 10 minutes, then gradually input higher value and operate while checking the functions.
- If the input voltage cannot be adjusted: Input the inverter rated voltage and run for about 30 minutes to check for any problems with the functions. Then, turn on the power again to perform full-scale operation.

*5. If the cooling fan is locked due to dust, etc., it takes about 5 to 10 seconds to restart even if dust is removed.
*6. Follow the instruction manual for the motor.

## 16.2.2 Megger® Test

- When testing an external circuit with a megger®, disconnect all the external circuit cables from the inverter to prevent it from being exposed to the test voltage.
- In the control circuit carry out a conduction test, use a tester (with high resistance range), do not use a megger® or buzzer/continuity tester.
- Use a 500 VDC megger® for the megger® test.
- For the megger® test of the inverter main circuit, short-circuit the terminals [R/L1], [S/L2], [T/L3], [U/T1], [V/T2], [W/T3], [P/+], [PD/+1], [N/-], and [RB] with wires as shown in the figure below.
- As a result of the megger® test, if the resistance value is 5 MΩ or higher, it is normal.

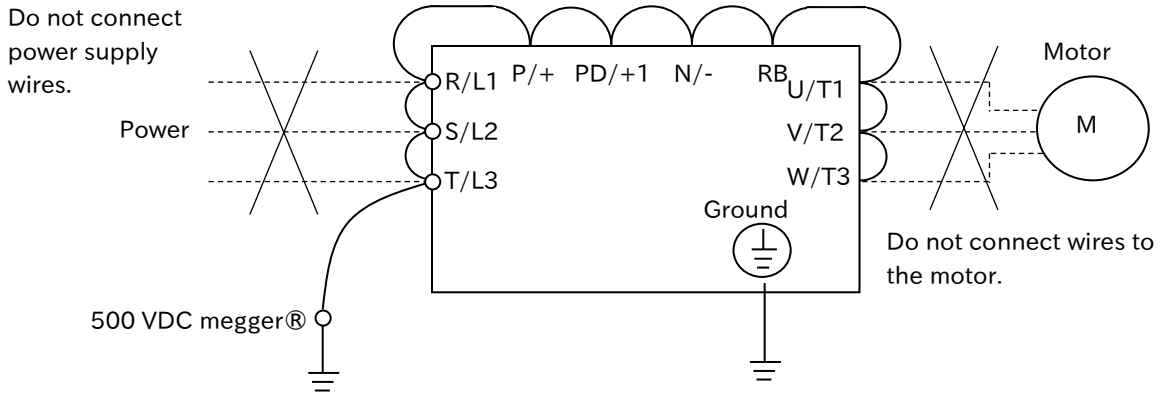


## 16.2.3 Withstand Voltage Test

- Do not carry out a withstand voltage test for the inverter.
- The test may damage its internal parts, deteriorating the inverter.

## 16.2.4 Checking the Inverter and Converter Section

### Checking method of inverter and converter

Using the analog multimeter, it can be checked if the inverter or converter unit are defective or non-defective.

### 1 Preparation

(1) Disconnect all wires to the main circuit terminal block (wires to the [R/L1], [S/L2], [T/L3], [U/T1], [V/T2], [W/T3], [P/+], [PD/+1], [N/-], and [RB] terminals).
(2) Prepare an analog multimeter. (The use range is 1 Ω resistance measurement range.)

### 2 Checking method

The good-or-bad condition of conduction status of terminals on the inverter main circuit terminal block [R/L1], [S/L2], [T/L3], [U/T1], [V/T2], [W/T3], [P/+], [PD/+1], [N/-] and [RB] can be judged by alternately changing the polarity of tester for measurement.

- By measuring the voltage between P and N in the DC voltage range, check that electricity is fully discharged from the smoothing capacitor before performing check.
- When electricity is not conducted, the value is almost infinite. (When conducting, it indicates several ohms to several tens of ohms.)
  Due to effects of the smoothing capacitor, electricity may be conducted instantly and may not show infinity value. The measured values vary depending on the element type, tester type, etc., but it is acceptable if the values in each section are nearly equal. The measured value may be shifted by several ohms due to the current limiting resistance for preventing inrush current.

| | | Tester polarity ⊕(Red) | Tester polarity ⊖(black) | Measured value |
|---|---|---|---|---|
| Converter | D1 | R/L1 | PD/+1 | Non-conductive |
| | | PD/+1 | R/L1 | Conductive |
| | D2 | S/L2 | PD/+1 | Non-conductive |
| | | PD/+1 | S/L2 | Conductive |
| | D3 | T/L3 | PD/+1 | Non-conductive |
| | | PD/+1 | T/L3 | Conductive |
| | D4 | R/L1 | N/- | Conductive |
| | | N/- | R/L1 | Non-conductive |
| | D5 | S/L2 | N/- | Conductive |
| | | N/- | S/L2 | Non-conductive |
| | D6 | T/L3 | N/- | Conductive |
| | | N/- | T/L3 | Non-conductive |
| Inverter | TR1 | U/T1 | P/+ | Non-conductive |
| | | P/+ | U/T1 | Conductive |
| | TR2 | V/T2 | P/+ | Non-conductive |
| | | P/+ | V/T2 | Conductive |
| | TR3 | W/T3 | P/+ | Non-conductive |
| | | P/+ | W/T3 | Conductive |
| | TR4 | U/T1 | N/- | Conductive |
| | | N/- | U/T1 | Non-conductive |
| | TR5 | V/T2 | N/- | Conductive |
| | | N/- | V/T2 | Non-conductive |
| | TR6 | W/T3 | N/- | Conductive |
| | | N/- | W/T3 | Non-conductive |
| BRD | TR7 | RB | P/+ | Non-conductive |
| | | P/+ | RB | Conductive |
| | | RB | N/- | Uncertainty |
| | | N/- | RB | Non-conductive |

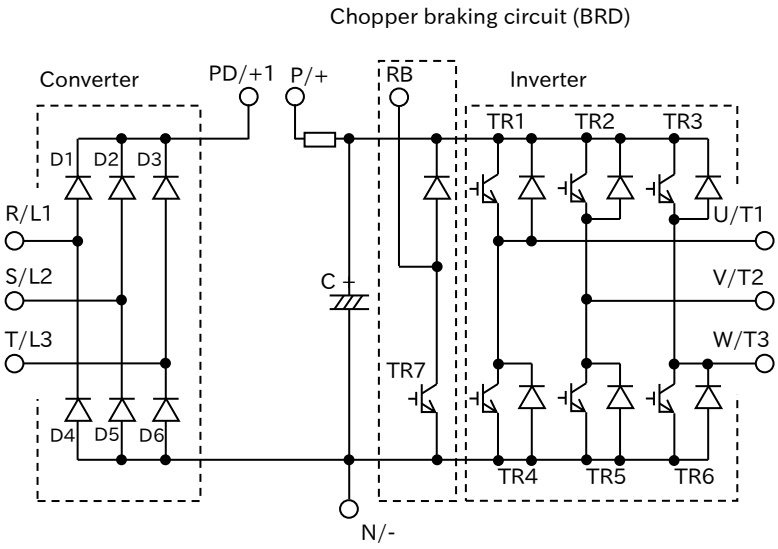

## 16.2.5 Smoothing Capacitor Life Curve

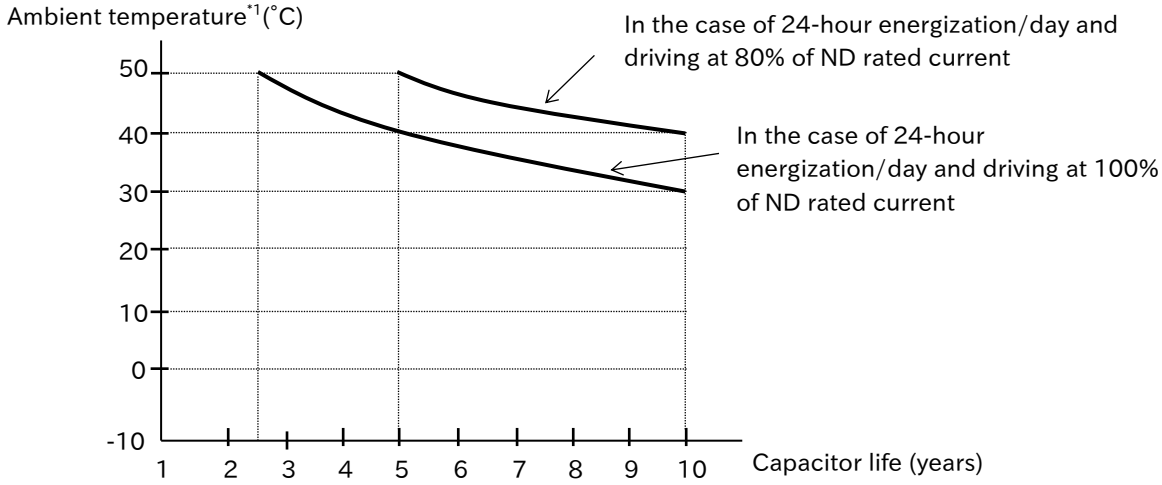


*1. The ambient temperature is a temperature measured at a position about 5 cm from the bottom center of the inverter (atmospheric temperature). If the inverter is installed in the cabinet, it is the temperature inside the cabinet.

*2. The smoothing capacitor is a finite life component which occurs chemical reaction inside, replacement of the inverter is required after 10 years of use (It is a designed expected life, not a guaranteed value).
However, if the inverter is used in an environment at high temperature or in a heavy-load environment where its rated current is exceeded, the life is significantly shortened.

## 16.2.6 Life Warning Output

- By the self-diagnostic, it is possible to output an alarm in regards of the inverter own internal components lifespan when the lifespan is nearing to its end (the cooling fan and the circuit board electrolytic capacitor excluding the main circuit smoothing capacitor). Use this to get a reference for when the components should be replaced.
- The life diagnostics of the electrolytic capacitor on the board and the cooling fan can be checked with "Capacitor life warning [WAC] (39)" and Cooling-fan life warning [WAF] (40)" output terminals or "Life assessment monitor [d022]". For details, see "9.11.7 Outputting a Warning of Capacitor Life on the Control Board", "9.11.8 Outputting a Warning of Cooling Fan Life", and "10.3.3 Monitor the Results of Lifetime Diagnosis", respectively. Since these alarms are based on the design lifespan (not guaranteed values), problems may arise depending on the environment, the operation conditions, etc. It is recommended an early maintenance.

## 16.2.7 Measurement Methods of I/O Voltage, Current, and Power

- Typical instruments for measuring input/output voltage, current, and power are shown below.

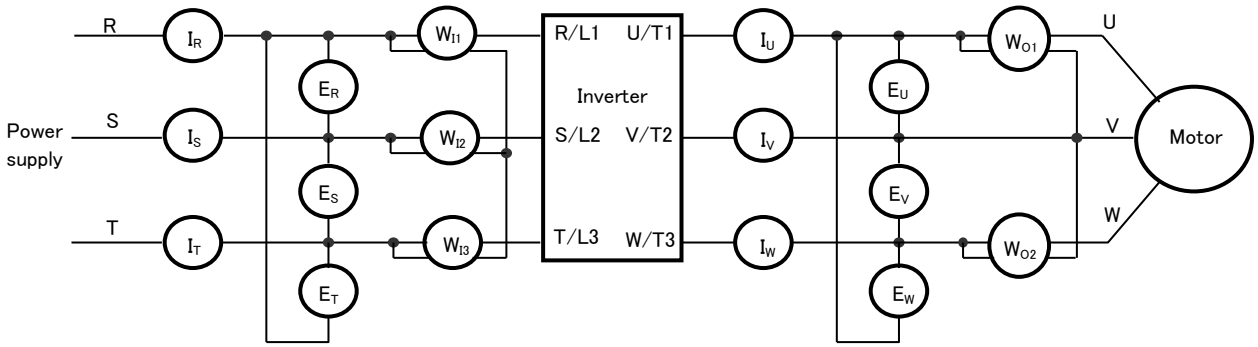


| Measurement data | Measurement point | Measuring instrument | Remarks | Standard reference values |
|---|---|---|---|---|
| Input voltage $E_{IN}$ | R-S, S-T, T-R<br>($E_R$), ($E_S$), ($E_T$) | Moving-iron voltmeter<br>or<br>Rectifier-type voltmeter | Effective value of full waves | 200 V class: 200 to 240 V 50/60 Hz<br>400 V class: 380 to 480 V 50/60 Hz |
| Input current $I_{IN}$ | R, S, T currents<br>($I_R$), ($I_S$), ($I_T$) | Moving-iron ammeter*1 | Effective value of full waves | If there is unbalance in the input supply<br>$I_{IN} = (I_R+I_S+I_T) / 3$ |
| Input power $W_{IN}$ | R-S, S-T, T-R<br>($W_{I1}$)+($W_{I2}$)+($W_{I3}$) | Electrodynamometer-type wattmeter*1 | Effective value of full waves | Three-wattmeter method |
| Input power factor $P_{fIN}$ | Calculated from the measured values of the input voltage ($E_{IN}$), power input current ($I_{IN}$), and input power ($W_{IN}$).<br>$P_{fIN} = \frac{W_{IN}}{\sqrt{3} \cdot E_{IN} \cdot I_{IN}} \times 100$ | | | |
| Output voltage $E_{OUT}$ | U-V, V-W, W-U<br>($E_U$), ($E_V$), ($E_W$) | See the figure below or Rectifier-type voltmeter*1*2 | Effective value of fundamental wave | |
| Output current $I_{OUT}$ | U, V, W currents<br>($I_U$), ($I_V$), ($I_W$) | Moving-iron ammeter *1*2 | Effective value of full waves | |
| Output power $W_{OUT}$ | U-V, V-W<br>($W_{O1}$)+($W_{O2}$) | Electrodynamometer-type wattmeter*1*2 | Effective value of full waves | Two-wattmeter method<br>(Or three-wattmeter method) |
| Output power factor $P_{fOUT}$ | Calculated from the measured values of the output voltage ($E_{OUT}$), output current ($I_{OUT}$), and output power ($W_{OUT}$).<br>$P_{fOUT} = \frac{W_{OUT}}{\sqrt{3} \cdot E_{OUT} \cdot I_{OUT}} \times 100$ | | | |

*1. Use instruments that show the effective value of the fundamental wave for the output voltage and the effective value of full waves for the current and power.
*2. Since the inverter output waveform is controlled by PWM, it has a large margin of error, especially at low frequencies. In many cases, general multimeters may be defective for the measurement, because of the adverse effects of the noise.

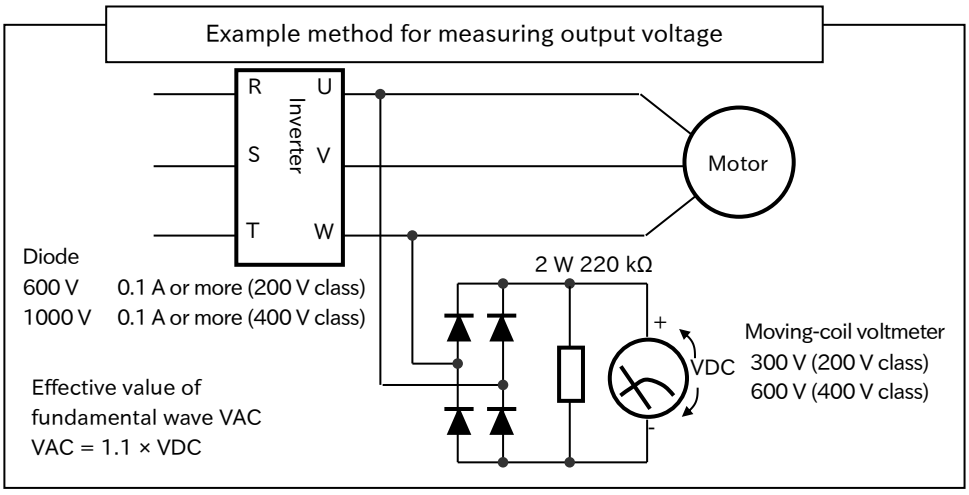

(Memo)

17

# Chapter 17 Specifications/Dimensions/Derating

This chapter describes product specifications of Ver.1.00 and Ver.2.00 and later for Basic Mode, their current deratings and external dimensions of Ver.1.00.
The abbreviations used in the product specifications show the following meanings.

- Load rating: ND = normal duty rating, LD = Light duty rating
  (Refer to "8.1.2 Changing the Load Rating of the Inverter" for details.)
- Motor type: IM = induction motor, SM/PMM = synchronous motor/permanent magnet motor

**17.1 Standard Specifications ..... 17-1-1**
17.1.1 Single-phase 200 V Class ..... 17-1-1
17.1.2 Three-phase 200 V Class ..... 17-1-2
17.1.3 Three-phase 400 V Class ..... 17-1-3
17.1.4 Common Specifications ..... 17-1-4
**17.2 External Dimensions ..... 17-2-1**
**17.3 Current Derating ..... 17-3-1**

# 17.1 Standard Specifications

## 17.1.1 Single-phase 200 V Class

| Model name C1-**** *1) | | | | 001S | 002S | 004S | 007S | 015S | 022S |
|---|---|---|---|---|---|---|---|---|---|
| Applicable motor capacity (4 poles) (kW) | | | LD | 0.2 | 0.4 | 0.55 | 1.1 | 2.2 | 3.0 |
| | | | ND | 0.1 | 0.2 | 0.4 | 0.75 | 1.5 | 2.2 |
| Output | Rated output current (A) *2) | | LD | 1.2 | 1.9 | 3.5 | 6.0 | 9.6 | 12.0 |
| | | | ND | 1.0 | 1.6 | 3.0 | 5.0 | 8.0 | 11.0 |
| | Overload current rating | | LD | 120% 60 sec | | | | | |
| | | | ND | 150% 60 sec | | | | | |
| | Rated output voltage | | | Three-phase 200 to 240 V (Output above the incoming voltage is not possible.) | | | | | |
| | Rated power (kVA) | 200 V | LD | 0.4 | 0.6 | 1.2 | 2.0 | 3.3 | 4.1 |
| | | | ND | 0.2 | 0.5 | 1.0 | 1.7 | 2.7 | 3.8 |
| | | 240 V | LD | 0.4 | 0.7 | 1.4 | 2.4 | 3.9 | 4.9 |
| | | | ND | 0.3 | 0.6 | 1.2 | 2.0 | 3.3 | 4.5 |
| Input | Rated input current (A) *3) | | LD | 2.0 | 3.8 | 7.3 | 13.8 | 20.2 | 24.0 |
| | | | ND | 1.3 | 3.0 | 6.3 | 11.5 | 16.8 | 22.0 |
| | Rated input AC voltage *4) | | | Single-phase 200 to 240 V/allowable range of variation 170 to 264 V, 50 Hz (allowable range of variation 47.5 to 52.5 Hz)/60 Hz (allowable range of variation 57 to 63 Hz) | | | | | |
| | Power supply capacity (kVA) *5) | | LD | 10.0 | 10.0 | 10.0 | 10.0 | 10.0 | 10.0 |
| | | | ND | 10.0 | 10.0 | 10.0 | 10.0 | 10.0 | 10.0 |
| Carrier frequency variation *6) | | | LD | 2.0 to 10.0 kHz | | | | | |
| | | | ND | 2.0 to 15.0 kHz | | | | | |
| Starting torque *7) | | | | 200% / 0.5 Hz | | | | | |
| Braking torque | Without braking resistor *8) | | | 100%: ≦ 50 Hz<br>50%: ≦ 60 Hz | | | | 70%: ≦ 50 Hz<br>50%: ≦ 60 Hz | 20%: ≦ 50 Hz<br>20%: ≦ 60 Hz |
| | With braking resistor | | | 150% | | | | | 100% |
| Minimum resistance value of connectable braking resistor (Ω) | | | | 100 | 100 | 100 | 50 | 50 | 35 |
| Cooling method | | | | Self-cooling (without FAN) | | | | Forced air cooling (with FAN) | |
| Dimensions | H (height) (mm) | | | 128 | 128 | 128 | 128 | 128 | 128 |
| | W (width) (mm) | | | 68 | 68 | 68 | 108 | 108 | 108 |
| | D (depth) (mm) | | | 109 | 109 | 122.5 | 170.5 | 170.5 | 170.5 |
| Protective structure | | | | IP20 / UL open type | | | | | |
| Approximate weight (kg) | | | | 1.0 | 1.0 | 1.1 | 1.6 | 1.8 | 1.8 |

*1) The capacity code and voltage class are indicated on the model name. Others are omitted.
*2) Some models require current derating depending on the carrier frequency setting and ambient temperature. For details, refer to "17.3 Current Derating". (Please contact us for models not described.)
*3) The rated input current is the value at the rated output current. The value changes according to the impedance on the power supply side (wiring, breaker, input reactor option, etc.). The input current on the specification label indicates the UL-certified current.
*4) Compliance with the Low Voltage Directive (LVD) is as follows. -Pollution degree 2, -Overvoltage category 3
*5) Power supply capacity is the value of the rated output current at 220 V. The value changes according to the impedance on the power supply side (wiring, breaker, input reactor option, etc.).
*6) The setting range of "Carrier Frequency [b083]" is limited according to "Load Specification Selection [b049]". It is recommended to set the carrier frequency setting equal or greater than the (maximum output frequency × 10) Hz.
*7) The value is specified for the Hitachi standard motor controlled by the sensorless vector control at ND rating. Torque characteristics may vary depending on the control mode and the motor used.
*8) The braking torque during regeneration is the average deceleration torque for the shortest deceleration (stopping from 50 Hz). It is not continuous regenerative torque by the external force. The braking torque varies depending on the loss of the motor. This value decreases when operating beyond the base frequency.

## 17.1.2 Three-phase 200 V Class

| Model name C1-**** *1) | | | 001L | 002L | 004L | 007L | 015L | 022L | 037L | 055L | 075L | 110L | 150L |
|---|---|---|---|---|---|---|---|---|---|---|---|---|---|
| Applicable motor capacity (4 poles) (kW) | | LD | 0.2 | 0.4 | 0.75 | 1.1 | 2.2 | 3.0 | 5.5 | 7.5 | 11 | 15 | 18.5 |
| | | ND | 0.1 | 0.2 | 0.4 | 0.75 | 1.5 | 2.2 | 3.7 | 5.5 | 7.5 | 11 | 15 |
| Output | Rated output current (A) *2) | LD | 1.2 | 1.9 | 3.5 | 6.0 | 9.6 | 12.0 | 19.6 | 30.0 | 40.0 | 56.0 | 69.0 |
| | | ND | 1.0 | 1.6 | 3.0 | 5.0 | 8.0 | 11.0 | 17.5 | 25.0 | 33.0 | 47.0 | 60.0 |
| | Overload current rating | LD | 120% 60 sec | | | | | | | | | | |
| | | ND | 150% 60 sec | | | | | | | | | | |
| | Rated output voltage | | Three-phase 200 to 240 V (Output above the incoming voltage is not possible.) | | | | | | | | | | |
| | Rated capacity (kVA) 200 V | LD | 0.4 | 0.6 | 1.2 | 2.0 | 3.3 | 4.1 | 6.7 | 10.3 | 13.8 | 19.3 | 23.9 |
| | | ND | 0.2 | 0.5 | 1.0 | 1.7 | 2.7 | 3.8 | 6.0 | 8.6 | 11.4 | 16.2 | 20.7 |
| | Rated capacity (kVA) 240 V | LD | 0.4 | 0.7 | 1.4 | 2.4 | 3.9 | 4.9 | 8.1 | 12.4 | 16.6 | 23.2 | 28.6 |
| | | ND | 0.3 | 0.6 | 1.2 | 2.0 | 3.3 | 4.5 | 7.2 | 10.3 | 13.7 | 19.5 | 24.9 |
| Input | Rated input current (A) *3) | LD | 1.2 | 1.9 | 3.9 | 7.2 | 10.8 | 13.9 | 23.0 | 37.0 | 48.0 | 68.0 | 72.0 |
| | | ND | 1.0 | 1.6 | 3.3 | 6.0 | 9.0 | 12.7 | 20.5 | 30.8 | 39.6 | 57.1 | 62.6 |
| | Rated input AC voltage *4) | | Three-phase 200 to 240 V/allowable range of variation 170 to 264 V, 50 Hz (allowable range of variation 47.5 to 52.5 Hz)/60Hz (allowable range of variation 57 to 63 Hz) | | | | | | | | | | |
| | Power supply capacity (kVA) *5) | LD | 10.0 | 10.0 | 10.0 | 10.0 | 10.0 | 10.0 | 20.0 | 30.0 | 50.0 | 50.0 | 75.0 |
| | | ND | 10.0 | 10.0 | 10.0 | 10.0 | 10.0 | 10.0 | 20.0 | 20.0 | 30.0 | 50.0 | 50.0 |
| Carrier frequency variation *6) | | LD | 2.0 to 10.0 kHz | | | | | | | | | | |
| | | ND | 2.0 to 15.0 kHz | | | | | | | | | | |
| Starting torque *7) | | | 200% / 0.5 Hz | | | | | | | | | | |
| Braking torque | Without braking resistor *8) | | 100%: ≦ 50 Hz<br>50%: ≦ 60 Hz | | | | 70%: ≦ 50 Hz<br>50%: ≦ 60 Hz | 20%: ≦ 50 Hz<br>20%: ≦ 60 Hz | | | | | |
| | With braking resistor | | 150% | | | | | 100% | | | 80% | | |
| Minimum resistance value of connectable braking resistor (Ω) | | | 100 | 100 | 100 | 50 | 50 | 35 | 35 | 20 | 17 | 17 | 10 |
| Cooling method | | | Self-cooling (without FAN) | | | | Forced air cooling (with FAN) | | | | | | |
| Dimensions | H (height) (mm) | | 128 | 128 | 128 | 128 | 128 | 128 | 128 | 260 | 260 | 296 | 350 |
| | W (width) (mm) | | 68 | 68 | 68 | 68 | 108 | 108 | 140 | 140 | 140 | 180 | 220 |
| | D (depth) (mm) | | 109 | 109 | 122.5 | 145.5 | 170.5 | 170.5 | 170.5 | 155 | 155 | 165 | 175 |
| Degree of protection | | | IP20 / UL open type | | | | | | | | | | |
| Approximate weight (kg) | | | 1.0 | 1.0 | 1.1 | 1.6 | 1.8 | 1.8 | 2.0 | 3.5 | 3.5 | 4.5 | 6.5 |

*1) The capacity code and voltage class are indicated on the model name. Others are omitted.
*2) Some models require current derating depending on the carrier frequency setting and ambient temperature. For details, refer to "17.3 Current Derating". (Please contact us for models not described.)
*3) The rated input current is the value at the rated output current. The value changes according to the impedance on the power supply side (wiring, breaker, input reactor option, etc.). The input current on the specification label indicates the UL-certified current.
*4) Compliance with the Low Voltage Directive (LVD) is as follows. -Pollution degree 2, -Overvoltage category 3
*5) Power supply capacity is the value of the rated output current at 220 V. The value changes according to the impedance on the power supply side (wiring, breaker, input reactor option, etc.).
*6) The setting range of "Carrier Frequency [b083]" is limited according to "Load Specification Selection [b049]". It is recommended to set the carrier frequency setting equal or greater than the (maximum output frequency × 10) Hz.
*7) The value is specified for the Hitachi standard motor controlled by the sensorless vector control at ND rating. Torque characteristics may vary depending on the control mode and the motor used.
*8) The braking torque during regeneration is the average deceleration torque for the shortest deceleration (stopping from 50 Hz). It is not continuous regenerative torque by the external force. The braking torque varies depending on the loss of the motor. This value decreases when operating beyond the base frequency.

## 17.1.3 Three-phase 400 V Class

| Model name C1-**** *1) | | | | 004H | 007H | 015H | 022H | 030H | 040H | 055H | 075H | 110H | 150H |
|---|---|---|---|---|---|---|---|---|---|---|---|---|---|
| Applicable motor capacity (4 poles) (kW) | | | LD | 0.75 | 1.5 | 2.2 | 3.0 | 4.0 | 5.5 | 7.5 | 11 | 15 | 18.5 |
| | | | ND | 0.4 | 0.75 | 1.5 | 2.2 | 3.0 | 4.0 | 5.5 | 7.5 | 11 | 15 |
| Output | Rated output current (A) *2) | | LD | 2.1 | 4.1 | 5.4 | 6.9 | 8.8 | 11.1 | 17.5 | 23.0 | 31.0 | 38.0 |
| | | | ND | 1.8 | 3.4 | 4.8 | 5.5 | 7.2 | 9.2 | 14.8 | 18.0 | 24.0 | 31.0 |
| | Overload current rating | | LD | 120% 60 sec | | | | | | | | | |
| | | | ND | 150% 60 sec | | | | | | | | | |
| | Rated output voltage | | | Three-phase 380 to 480 V (Output above the incoming voltage is not possible.) | | | | | | | | | |
| | Rated capacity (kVA) | 200V | LD | 1.3 | 2.6 | 3.5 | 4.5 | 5.7 | 7.3 | 11.5 | 15.1 | 20.4 | 25.0 |
| | | | ND | 1.1 | 2.2 | 3.1 | 3.6 | 4.7 | 6.0 | 9.7 | 11.8 | 15.7 | 20.4 |
| | | 240V | LD | 1.7 | 3.4 | 4.4 | 5.7 | 7.3 | 9.2 | 14.5 | 19.1 | 25.7 | 31.5 |
| | | | ND | 1.4 | 2.8 | 3.9 | 4.5 | 5.9 | 7.6 | 12.3 | 14.9 | 19.9 | 25.7 |
| Input | Rated input current(A) *3) | | LD | 2.1 | 4.3 | 5.9 | 8.1 | 9.4 | 13.3 | 20.0 | 24.0 | 38.0 | 44.0 |
| | | | ND | 1.8 | 3.6 | 5.2 | 6.5 | 7.7 | 11.0 | 16.9 | 18.8 | 29.4 | 35.9 |
| | Rated input AC voltage *4) | | | Three-phase 380 to 480 V/allowable range of variation 323 to 528 V, 50 Hz (allowable range of variation 47.5 to 52.5 Hz)/60 Hz (allowable range of variation 57 to 63 Hz) | | | | | | | | | |
| | Power supply capacity (kVA) *5) | | LD | 10.0 | 10.0 | 10.0 | 10.0 | 20.0 | 20.0 | 30.0 | 30.0 | 50.0 | 50.0 |
| | | | ND | 10.0 | 10.0 | 10.0 | 10.0 | 10.0 | 20.0 | 20.0 | 30.0 | 30.0 | 50.0 |
| Carrier frequency variation *6) | | | LD | 2.0 to 10.0 kHz | | | | | | | | | |
| | | | ND | 2.0 to 15.0 kHz | | | | | | | | | |
| Starting torque *7) | | | | 200% / 0.5Hz | | | | | | | | | |
| Braking torque | Without braking resistor *8) | | | 100%: ≦ 50 Hz<br>50%: ≦ 60 Hz | | | 70%: ≦ 50 Hz<br>50%: ≦ 60 Hz | 20%: ≦ 50 Hz<br>20%: ≦ 60 Hz | | | | | |
| | With braking resistor | | | 150% | | | 100% | | | 80% | | | |
| Minimum resistance value of connectable braking resistor (Ω) | | | | 180 | 180 | 180 | 100 | 100 | 100 | 70 | 70 | 70 | 35 |
| Cooling method | | | | Self-cooling (without FAN) | Forced air cooling (with FAN) | | | | | | | | |
| Dimensions | H (height) (mm) | | | 128 | 128 | 128 | 128 | 128 | 128 | 260 | 260 | 296 | 296 |
| | W (width) (mm) | | | 108 | 108 | 108 | 108 | 108 | 140 | 140 | 140 | 180 | 180 |
| | D (depth) (mm) | | | 143.5 | 170.5 | 170.5 | 170.5 | 170.5 | 170.5 | 155 | 155 | 165 | 165 |
| Degree of protection | | | | IP20 / UL open type | | | | | | | | | |
| Approximate weight (kg) | | | | 1.5 | 1.8 | 1.8 | 1.8 | 2.0 | 2.0 | 3.5 | 3.5 | 4.5 | 4.5 |

*1) The capacity code and voltage class are indicated on the model name. Others are omitted.
*2) Some models require current derating depending on the carrier frequency setting and ambient temperature. For details, refer to "17.3 Current Derating". (Please contact us for models not described.)
*3) The rated input current is the value at the rated output current. The value changes according to the impedance on the power supply side (wiring, breaker, input reactor option, etc.). The input current on the specification label indicates the UL-certified current.
*4) Compliance with the Low Voltage Directive (LVD) is as follows. -Pollution degree 2, -Overvoltage category 3
*5) Power supply capacity is the value of the rated output current at 440 V. The value changes according to the impedance on the power supply side (wiring, breaker, input reactor option, etc.).
*6) The setting range of "Carrier Frequency [b083]" is limited according to "Load Specification Selection [b049]". It is recommended to set the carrier frequency setting equal or greater than the (maximum output frequency × 10) Hz.
*7) The value is specified for the Hitachi standard motor controlled by the sensorless vector control at ND rating. Torque characteristics may vary depending on the control mode and the motor used.
*8) The braking torque during regeneration is the average deceleration torque for the shortest deceleration (stopping from 50 Hz). It is not continuous regenerative torque by the external force. The braking torque varies depending on the loss of the motor. This value decreases when operating beyond the base frequency.

## 17.1.4 Common Specifications

| Item | | | Specifications | |
|---|---|---|---|---|
| Control method | | | PWM control (Switch to 2 phase modulation) | |
| Output frequency range *1) | | | 0.00 to 590.00 Hz | |
| Frequency accuracy | | | For the maximum frequency, digital ± 0.01%, analog ± 0.2% (25 ± 10°C) | |
| Frequency resolution | | | Digital: 0.01Hz, analog: maximum frequency/1000 | |
| Control mode (Voltage/frequency calculation) *2) | | | IM | V/f control (constant torque/ reduced torque/ free V/f, automatic torque boost), V/f control with sensor (constant torque/ reduced torque/ free V/f, automatic torque boost), Sensorless vector control (With carrier frequency derating at low sepeed) |
| | | | SM/PMM | PM sensorless vector control *3) |
| Acceleration/deceleration time | | | 0.00 to 3600.00 s (linear, S-curve, U-curve, inverted U-curve, EL-S-curve) | |
| Starting torque | | | 200%/ 0.5 Hz (IM sensorless vector control) | |
| Monitor function | | | Output frequency, Output current, Output torque, Trip history, I/O terminal status, Input power *4), Output power *4), DC voltage, etc. | |
| Starting function | | | Starting after DC braking, Active frequency matching, Reduced voltage start, Trip retry restart | |
| Stop function | | | Free-run stop, DC braking after deceleration stop, DC braking by input terminal (adjustable braking force, time, and operating speed) | |
| Stall prevention function | | | Overload limit, Overcurrent suppression, Overvoltage suppression | |
| Protective function *5) | | | Overcurrent error, Overload error, Braking resistor overload error, Overvoltage error, Memory error, Undervoltage error, Current detector error, CPU error, External trip error, USP error, Ground fault, Power supply overvoltage error, Temperature detection error, Cooling fin temperature error, CPU communication error, Main circuit error, Analog current input error, Driver error, Thermistor error, Brake error, STO shut-off error, Low-speed range overload error, Remote operator communication error, Modbus communication error, EzSQ related errors, Option related errors, Encoder disconnection error, Overspeed error, Position control range error, Safety function related errorsS | |
| Other functions | | | V/f free setting, Manual torque boost, Output voltage gain, AVR, Braking resistor circuit (BRD), Motor constant selection, Auto-tuning, Stabilization control, Direction reversal protection, Simple position control, Torque control, Torque limit, Automatic carrier reduction, Energy saving operation, PID control, Instantaneous power failure non-stop, Brake control, Commercial power supply switching, Minimum frequency, Upper and lower frequency limit, Jump frequency, Multi-speed, Acceleration/deceleration stop, Frequency addition, 2-stage acceleration/deceleration, External start/ end, Analog output adjustment, Window comparator, Stop selection, Input terminal response, Output signal delay, Operation direction limit, STOP/RESET key selection,Soft-Lock, Scaling function, Display restriction, Ppassword function, Initial display selection, Cooling-fan ON/OFF, Warning, etc. Refer to chapters 7 to 10 for details of the functions. | |
| Input | Frequency reference | Keypad | The parameters for the command value (set by JOG key, Esc key and SET key on the keypad) | |
| | | External signal *6) | Ai1 terminal | 0 to 10 VDC voltage input (input impedance: 10 kΩ) |
| | | | Ai2 terminal | 4 to 20 mA current input (input impedance: 100 Ω) |
| | | | Multi-speed terminal (input terminal function used) | Maximum 16 speed |
| | | | Pulse input (input terminal function used) | Maximum 32 kHz × 2 |
| | | External port | RS485 serial communication (Modbus-RTU), Remote operator, Communication option | |
| | Forward/ Reverse Run/Stop | Keypad | RUN/ STOP key (with the set parameter, forward/ reverse can be switched) | |
| | | External signal | Forward (FW)/ Reverse (RV), 3-wire input (when input terminal functions are assigned) | |
| | | External port | RS485 serial communication (Modbus-RTU), Remote operator, Communication option | |
| | Input terminal function | | 7 terminals (the following functions can be assigned to input terminals 1 to 7):<br>FW (Forward rotation)/RV (Reverse rotation), CF1 to CF4 (Multi speed 1 to 4), JG (Jogging), DB (External DC braking), SET (2nd motor control), 2CH (2-stage Acceleration/Deceleration), FRS (Free run stop), USP (Unattended start protection), CS (Commercial power supply change), SFT (Soft-Lock), AT (Analog input switching), RS (Reset), PTC (External thermistor), STA (3-wire Start), STP (3-wire Stop), F/R (3-wire Forward/Reverse), PID (Disable PID), PIDC (PID integration reset), FUP (Remote control Speed-UP function), FDN (Remote control Speed-DOWN function), F-OP (Force operation), SF1 to SF7 (Multi speed Bit-1 to Bit-7), OLR (Overload restriction selection), TL (Torque limit enable), TRQ1/2 (Torque limit selection bit 1/2), BOK (Answer back from Brake), LAC (Acceleration/Deceleration cancellation), PCLR (Clearance of position deviation), ADD (Trigger for frequency addition), F-TM (Force terminal), ATR (Permission of torque control), KHC (Accumulated input power monitor clear), MI1 to MI7 (General-purpose input 1 to 7), AHD (Analog command holding), CP1 to CP3 (Multistage position setting selection 1 to 3), ORL (Limit signal of Homing function), ORG (Start signal of Homing function), SPD (Speed/position switching), ECOM (EzCOM activation), PRG (Program RUN), HLD (Acceleration/Deceleration disable), REN (RUN enable), PLB (Pulse input B), DISP (Display lock), PSET (Position data presetting), no (No assignment) | |
| | Analog input | | 2 terminals ([Ai1] terminal: 0 to 10 VDC voltage input, [Ai2] terminal: 4 to 20 mA current input) | |
| | Backup power supply terminal | | External 24 VDC can be input from [P24] terminal (installation of a reverse-current-prevention diode is mandatory). | |
| | Safety function STO input terminal | | 2 terminals (simultaneous input) | |
| | Thermistor input terminal | | 1 terminal (when [PTC] is assigned to input terminal 5) | |
| | Pulse input | | 2 terminals (input terminal 8 (fixed to "pulse input A [PLA]"), when [PLB] is assigned to input terminal 7) | |

| Item | | Specifications |
|---|---|---|
| Output | Output terminal function | Open collector output 2 terminals, 1c contact relay 1 terminal (the following functions can be assigned to each output terminal):<br>RUN (Running), FA1 (Constant-frequency reached), FA2 (Set frequency overreached),<br>OL1 (Overload warning notice), AL (Alarm), FA3 (Set frequency reached),<br>OTQ (Over-torque/under-torque), TRQ (Torque limited), RNT (Accumulated RUN time over),<br>ONT (Accumulated power-on time over), THM (electronic thermal alarm (Motor)),<br>BRK (Brake release), BER (Brake error), ZS (Zero speed detection), DSE (Speed over deviation),<br>POK (Positioning completed), FA4 (Set frequency overreached 2), FA5 (Set frequency reached 2),<br>OL2 (Overload warning notice 2), Ai1Dc (Analog [Ai1] disconnection detection),<br>Ai2Dc (Analog [Ai2] disconnection detection), FBV (PID feedback comparison),<br>NDc (Communication line disconnection), LOG1 to 3 (Logical operation result 1 to 3),<br>WAC (Capacitor life warning), WAF (Cooling-fan life warning), FR (RUN command active),<br>OHF (Cooling fin overheat warning), LOC (Low current signal),<br>MO1 to 3 (General-purpose output 1 to 3), IRDY (Inverter ready), FWR (Forward rotation),<br>RVR (Reverse rotation), MJA (Major failure), WCAi1 (Window comparator [Ai1]),<br>WCAi2 (Window comparator [Ai2]), FREF (Frequency reference by keypad),<br>REF (RUN command by keypad), SETM (2nd-motor control is selected),<br>EDM (STO state monitor output), OPO (Option output), FSC (STO input discrepancy),<br>no (No assignment) |
| | Functional safety EDM output | STO confirmation output (Output terminal 11 is switched to [EDM] by slide switch) |
| | Monitor output *7) | 2 terminals ([Ao1] terminal: 0 to 10 VDC analog voltage output, [Ao2] terminal: pulse output (max. 32 kHz)/10 VDC output) |
| EMC noise filter | | Not built-in (optional external filter can be connected) |
| PC external access | | USB Micro-B |
| Operating environment | Ambient temperature | ND (normal duty):-10 to 50˚C/ LD (light duty):-10 to 40˚C |
| | Storage temperature *8) | -20 to 65˚C |
| | Humidity | 20 to 95% RH (non-condensing) |
| | Vibration | 10 to 57 Hz: amplitude 0.075 mm<br>57 to 150 Hz: 9.8 m/s$^2$ (1.0 G) |
| | Installation place *9) | Altitude: 1000 m or less, indoors (free from corrosive gases, oil mist, and dust) |
| Components life span | | The design life of the electrolytic capacitor on the board and the main circuit smoothing capacitor is 10 years. |
| | | The design life of cooling fan is 10 years (models with cooling fan) with no dust. |
| | | Non-volatile momory parts on control circuit board. |
| Conformity standards *10) *11) *12) *13) | | CE: EN IEC 61800-3: 2018 (EMC-filter option required)<br>EN 61800-5-1: 2007, EN 61800-5-1: 2007/A1: 2017, EN 61800-5-1: 2007/A11: 2021<br>EN 61800-9-2: 2017<br>EN IEC 63000: 2018<br>UL: UL 61800-5-1, 1st Ed.,<br>Issue Date 2012-06-08, Revision Date 2021-02-11,<br>-Overvoltage Category 3, -Pollution Degree 2<br>Others: CSA C22.2 No.274, 2nd Ed., Issue Date 2017-04-01<br>Functional safety: STO(Safe torque off) function / EN 61800-5-2: SIL3、<br>EN ISO 13849-1: Cat.3 PLe<br>EN 61508-1 to 7 |
| Option board connector | | One unit can be mounted (existing communication options for WJ200 can be mounted) |
| Other optional components | | Noise Filter, DC link choke, AC reactor, Braking resistor, Regenerative braking unit, Remote operator (OPE-SR/OPE-SBK/OPE-SR mini/WOP), Inverter configuration software ProDriveNext, etc. |

*1) The output frequency range depends on the control mode and the motor used. Consult the motor manufacturer for the maximum allowable frequency of the motor when operating beyond 60Hz.
*2) In case that the control mode is changed and the motor constant settings are not appropriate, the desired starting torque cannot be obtained and also exists the possibility of tripping.
*3) Contact your supplier or local Hitachi sales office when driving SM/PMM.
*4) Input power monitor and output power monitor are reference values. They are not suitable for calculation of efficiency values, etc. To obtain an accurate value, use an external device.
*5) When a driver error [E30] occurs by the protective function, it may have happened by the short-circuit protection, but also can occur if the IGBT is damaged. Depending on the operating conditions of the inverter, an overcurrent error may occur instead of a driver error.
*6) At factory setting, the maximum output frequency for analog input signal [Ai1] is adjusted to 9.8 VDC for voltage input and [Ai2] is adjusted to 19.8 mA for current input. To change the characteristics, refer to the analog start/end function.
*7) Analog monitor output is a reference output for analog meter connection. The maximum output value may deviate slightly due to variations in the connected meters and analog output circuits. To change the characteristics, use [Ao1] adjust function.
*8) The storage temperature is the temperature during transportation.
*9) In case of installing at an altitude of 1000m or more, the atmospheric pressure decreases by approximately 1% for every 100 m altitude increase. Apply 1% current derating from the rated current by increasing every 100 m, and conduct an evaluation test. When using at an altitude of 2500 m, please contact your supplier or local Hitachi sales office.
*10) Insulation distance conforms to UL and CE standards.
*11) For details of standards of functional safety, refer to the separate "WJ Series C1 Safety Function Guide (NT3612*X)".
*12) The standards information on this document is as of June 2023.
*13) To meet these standards, humidity of operating environment needs to be from 20 to 90% RH (non-condensing).

# 17.2 External Dimensions

| Power supply | Model | W (mm) | H (mm) | D (mm) | D1 (mm) |
|---|---|---|---|---|---|
| Single-phase 200 V | C1-001SF | 68 | 128 | 109 | 13.5 |
| | C1-002SF | | | 109 | 13.5 |
| | C1-004SF | | | 122.5 | 27 |
| Three-phase 200 V | C1-001LF | | | 109 | 13.5 |
| | C1-002LF | | | 109 | 13.5 |
| | C1-004LF | | | 122.5 | 27 |
| | C1-007LF | | | 145.5 | 50 |

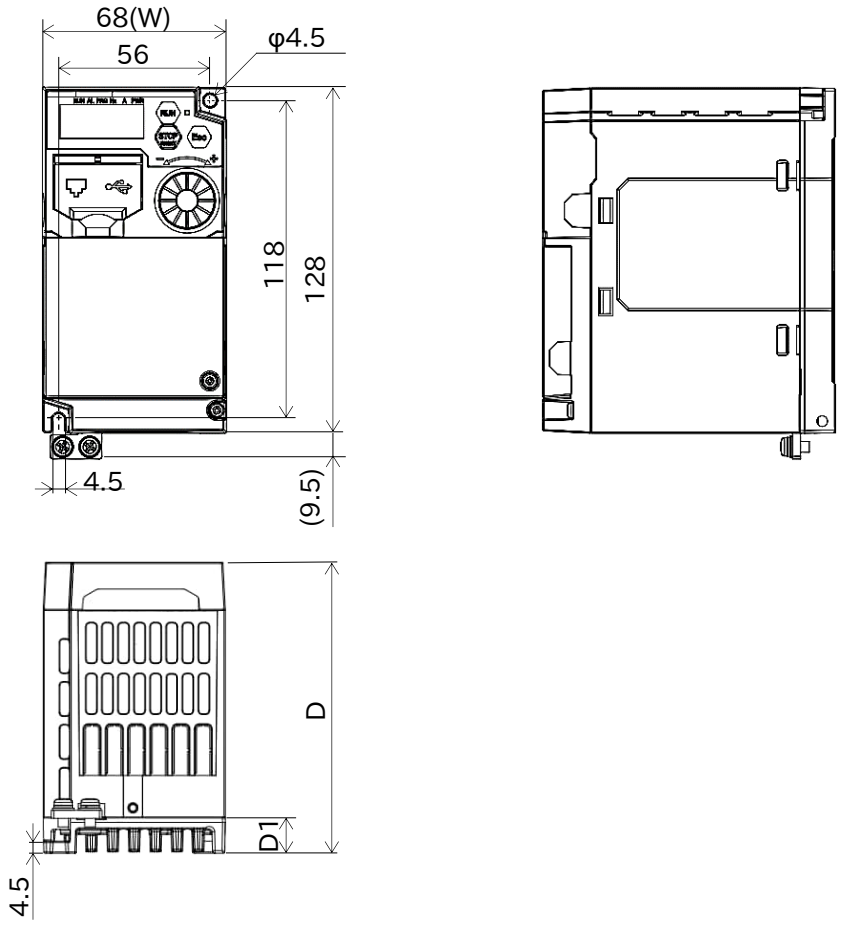

| Power supply | Model | W (mm) | H (mm) | D (mm) | D1 (mm) |
|---|---|---|---|---|---|
| Single-phase 200 V | C1-007SF | 108 | 128 | 170.5 | 55.5 |
| | C1-015SF | | | | |
| | C1-022SF | | | | |
| Three-phase 200 V | C1-015LF | | | | |
| | C1-022LF | | | | |
| Three-phase 400V | C1-004HF | | | 143.5 | 28.5 |
| | C1-007HF | | | 170.5 | 55.5 |
| | C1-015HF | | | | |
| | C1-022HF | | | | |
| | C1-030HF | | | | |

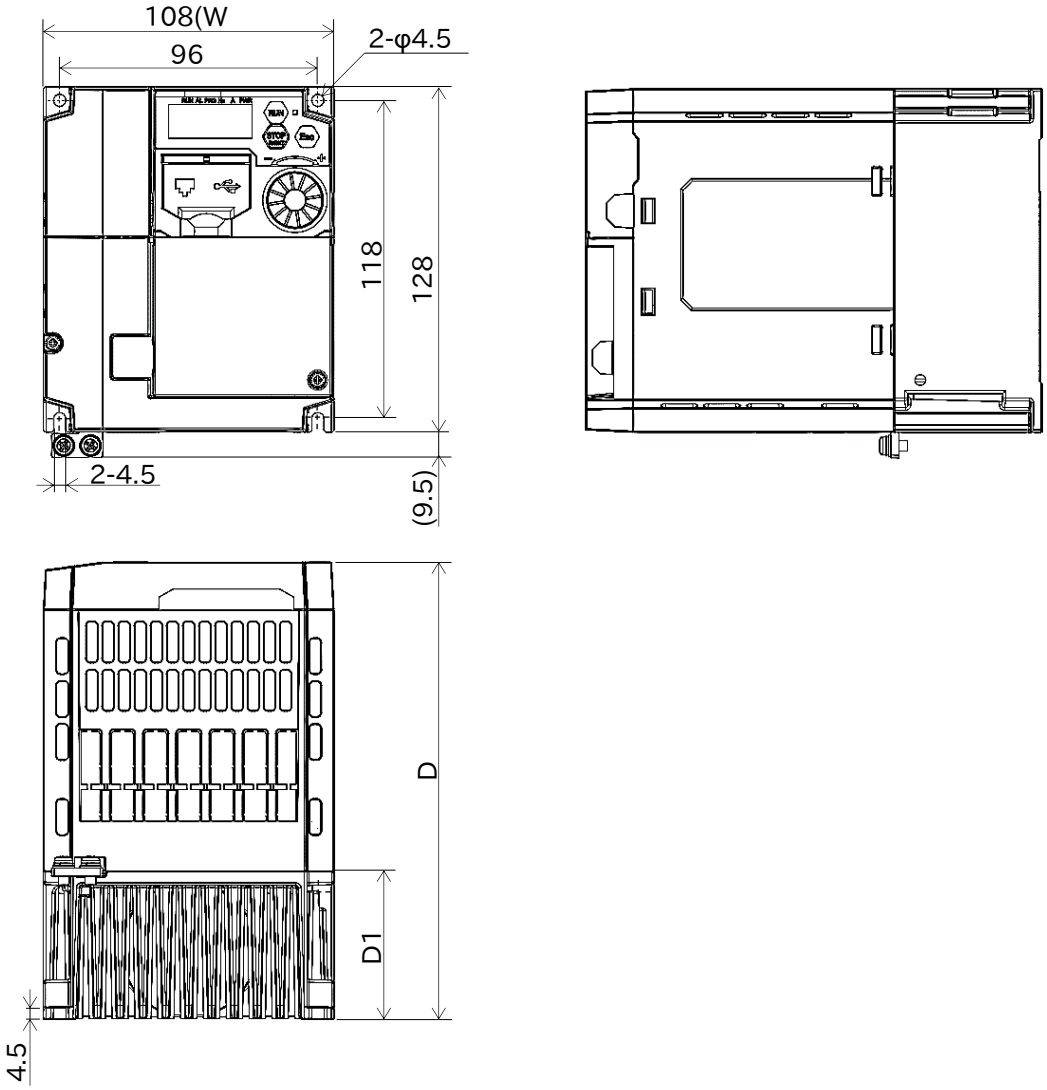

| Power supply | Model | W (mm) | H (mm) | D (mm) | D1 (mm) |
|---|---|---|---|---|---|
| Three-phase 200 V | C1-037LF | 140 | 128 | 170.5 | 55.5 |
| Three-phase 400 V | C1-040HF | | | | |

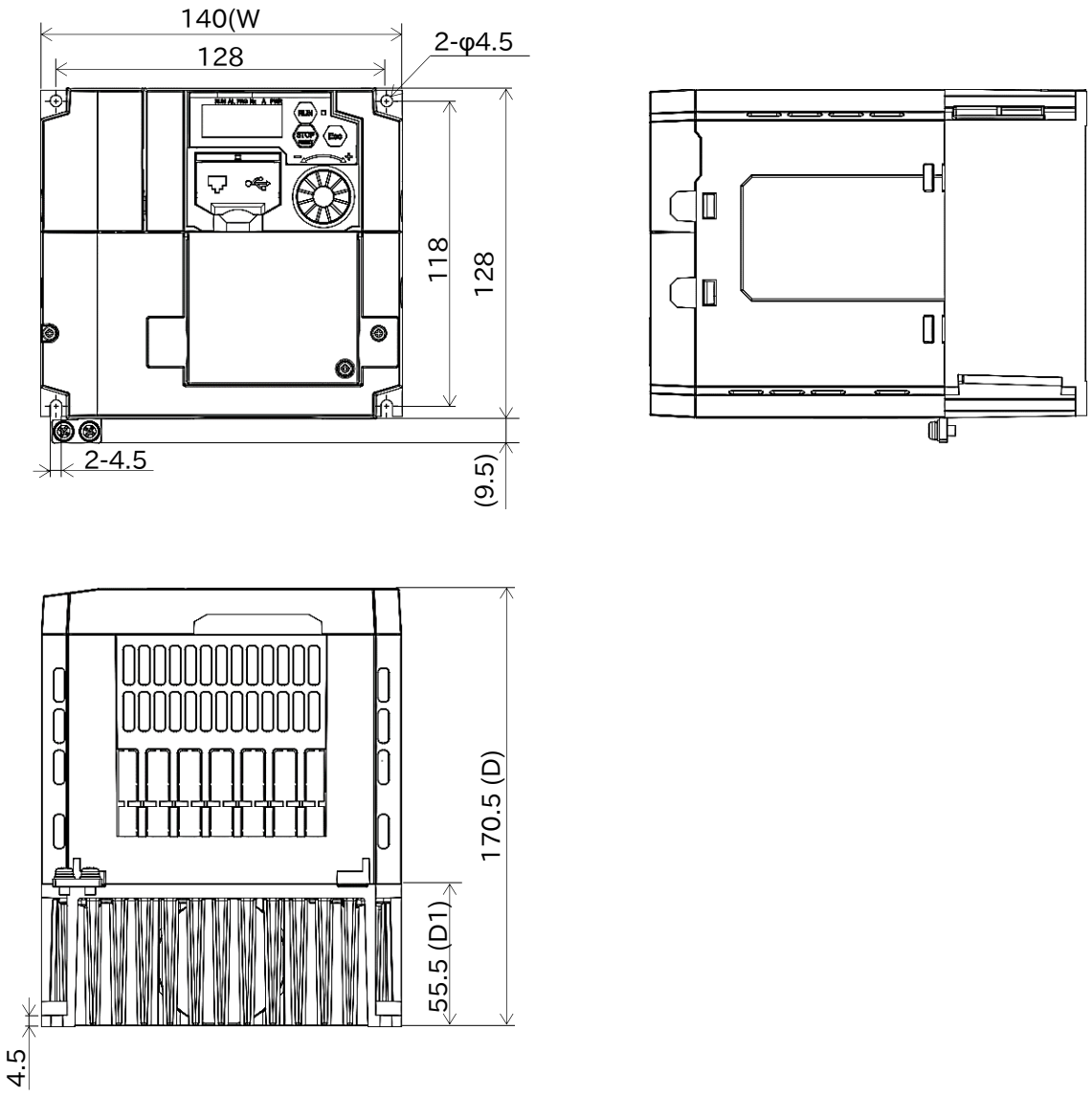

| Power supply | Model | W (mm) | H (mm) | D (mm) | D1 (mm) |
|---|---|---|---|---|---|
| 3Three-phase 200 V | C1-055LF | 140 | 260 | 155 | 74 |
| | C1-075LF | | | | |
| Three-phase 400 V | C1-055HF | | | | |
| | C1-075HF | | | | |

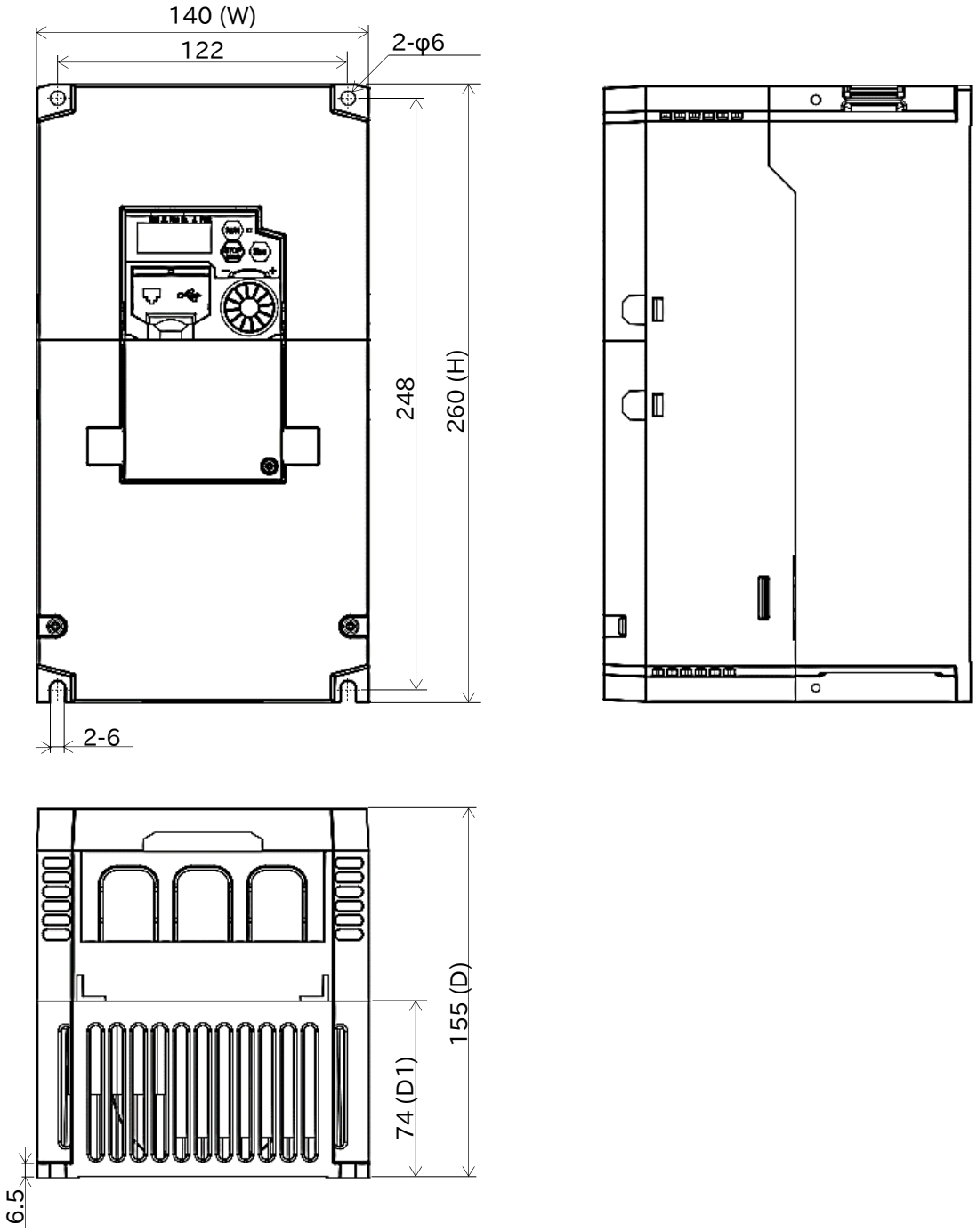

| Power supply | Model | W (mm) | H (mm) | D (mm) | D1 (mm) |
|---|---|---|---|---|---|
| Three-phase 200 V | C1-110LF | 180 | 296 | 165 | 84 |
| Three-phase 400 V | C1-110HF | | | | |
| | C1-150HF | | | | |

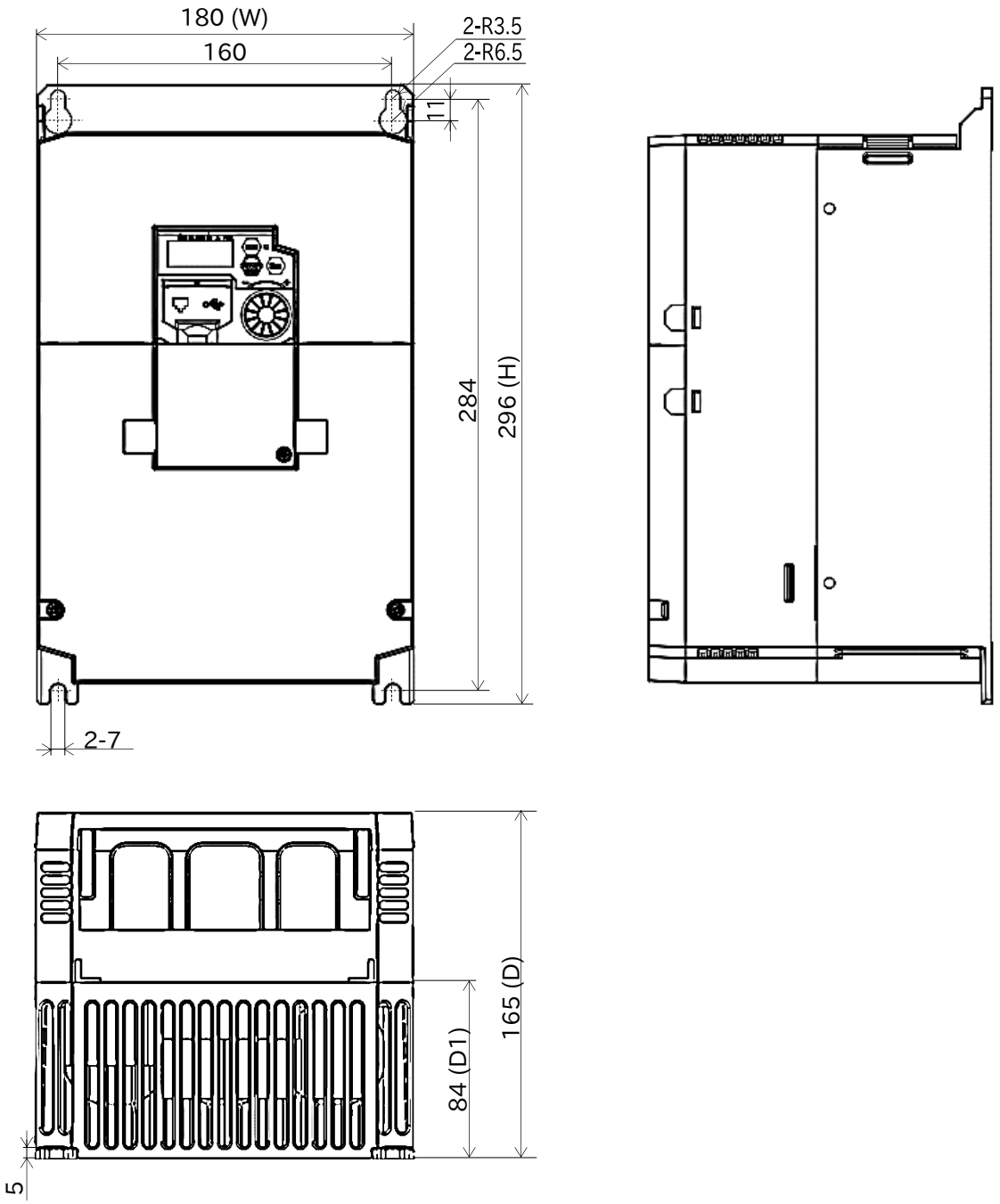

| Power supply | Model | W (mm) | H (mm) | D (mm) | D1 (mm) |
|---|---|---|---|---|---|
| Three-phase 200 V | C1-150LF | 220 | 350 | 175 | 98 |

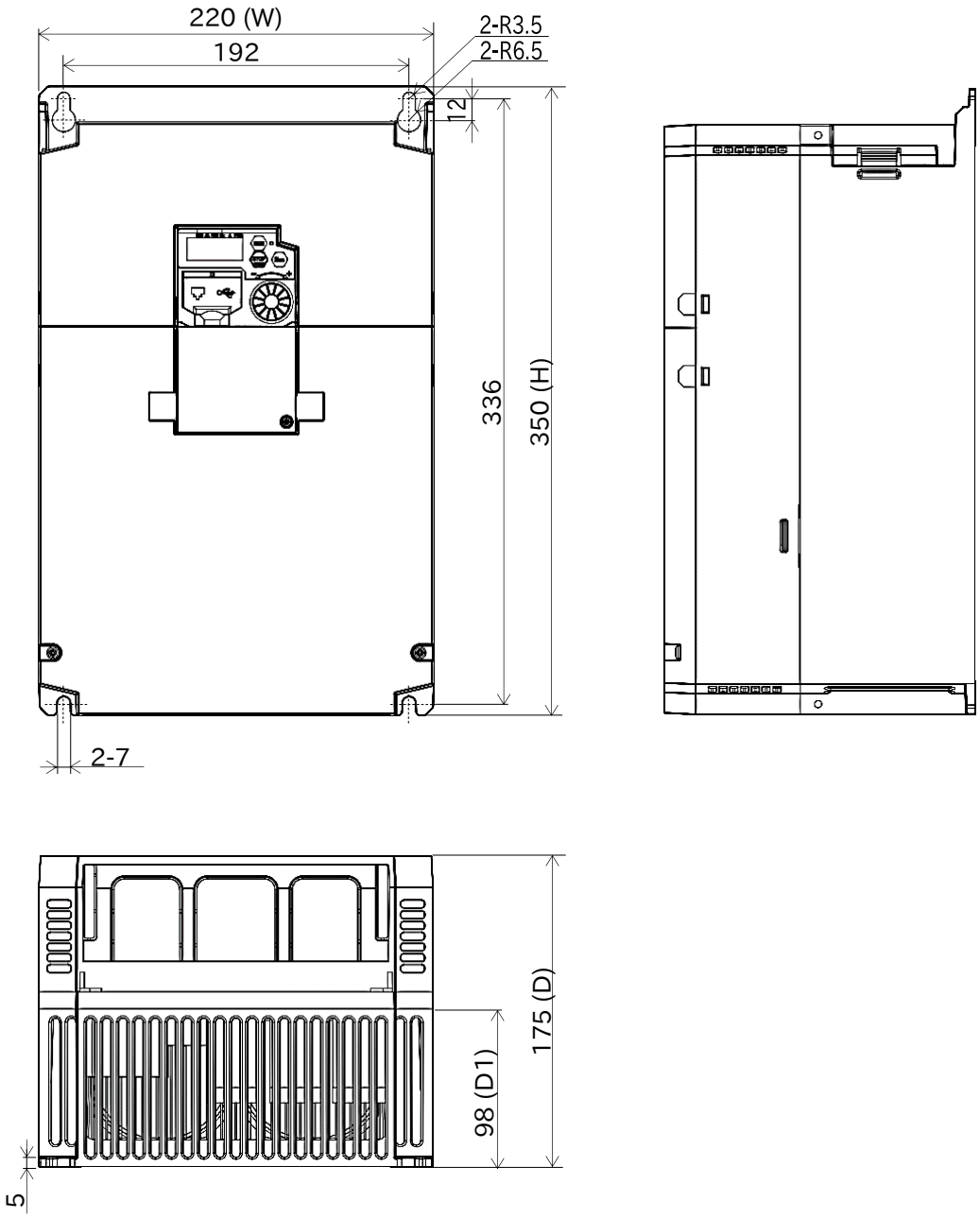

# 17.3 Current Derating

Q

- How do I derate the current?
- What are the current derating characteristics according to ambient temperature and installation conditions?

A

- When using a model that is checked with "✓" in the "Required" column in the table below, perform current derating as shown in the graph below. When installing multiple inverters side-by-side, the ambient temperature specification becomes -10 to +40˚C.
- Set the output current value to be derated as the electronic thermal level [b012]/[b212] (refer to "8.1.4 Setting Electronic Thermal for the Motor").

!

- If the product is used beyond the derating, it may cause damage to the inverter and shorten the product life.
- When installing WJ200 series and WJ-C1side-by-side, follow the current delaying of the respective models. Note that the ambient temperature specification when installing side-by-side is -10 to +40˚C also for WJ-C1.

■ Derating necessity table

| Single-phase 200 V | Required | Three-phase 200 V | Required | Three-phase 400 V | Required |
|---|---|---|---|---|---|
| C1-001S | - | C1-001L | - | C1-004H | ✓ |
| C1-002S | - | C1-002L | ✓ | C1-007H | ✓ |
| C1-004S | ✓ | C1-004L | - | C1-015H | - |
| C1-007S | ✓ | C1-007L | - | C1-022H | - |
| C1-015S | - | C1-015L | - | C1-030H | - |
| C1-022S | - | C1-022L | - | C1-040H | ✓ |
| - | - | C1-037L | ✓ | C1-055H | - |
| - | - | C1-055L | - | C1-075H | - |
| - | - | C1-075L | - | C1-110H | - |
| - | - | C1-110L | ✓ | C1-150H | ✓ |
| - | - | C1-150L | ✓ | - | - |

✓:Derating required -: Derating not required

## Models requiring no current derating

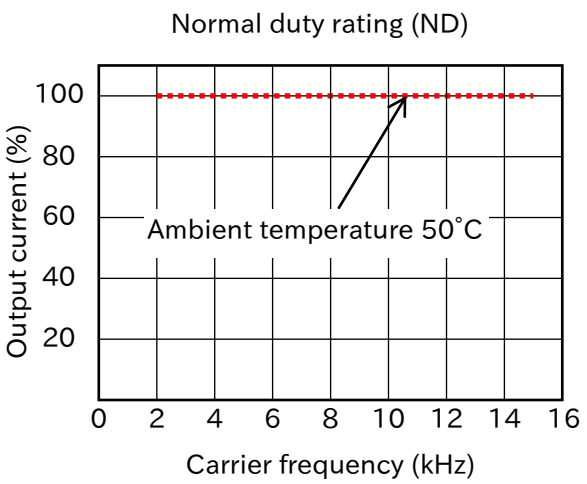


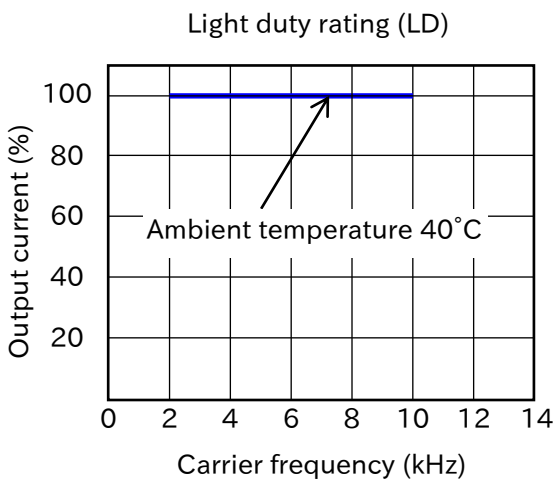

## Models requiring current derating

Ambient temperature 40˚C
Ambient temperature 50˚C

### C1-002L

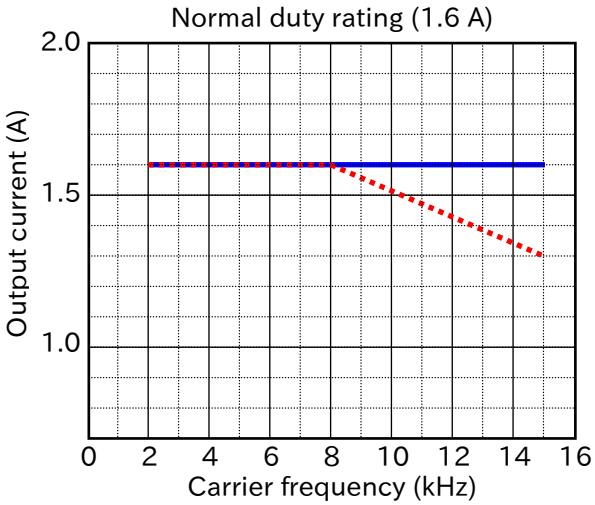


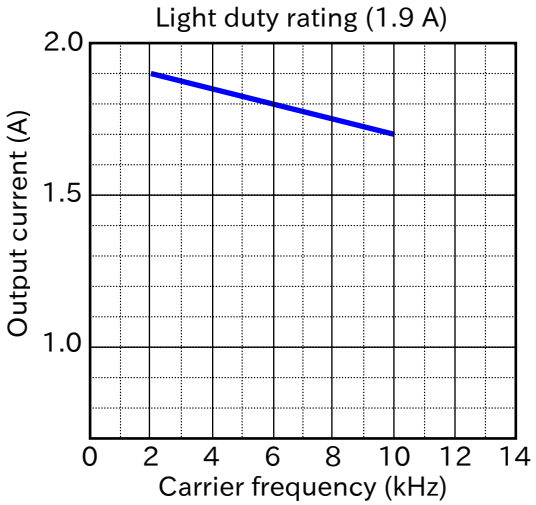


### C1-004S

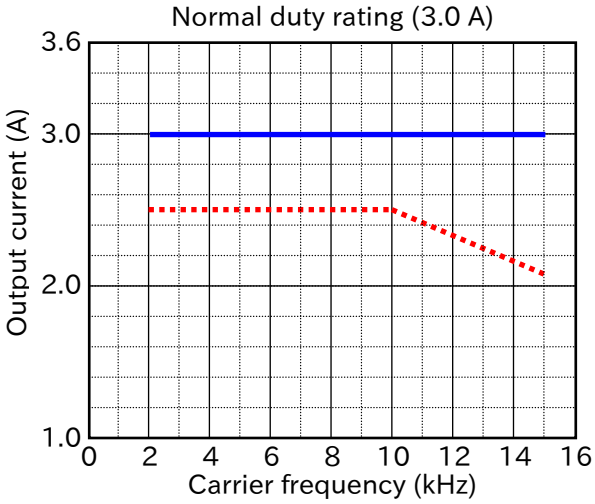


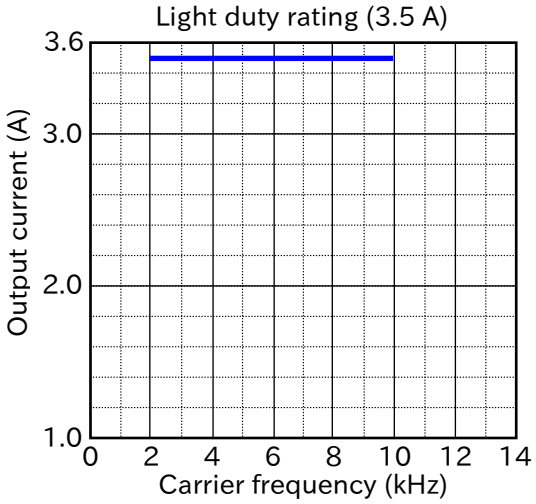


### C1-004H

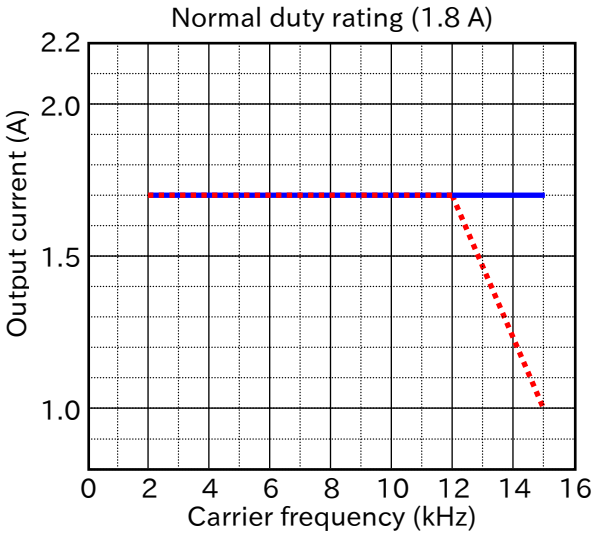


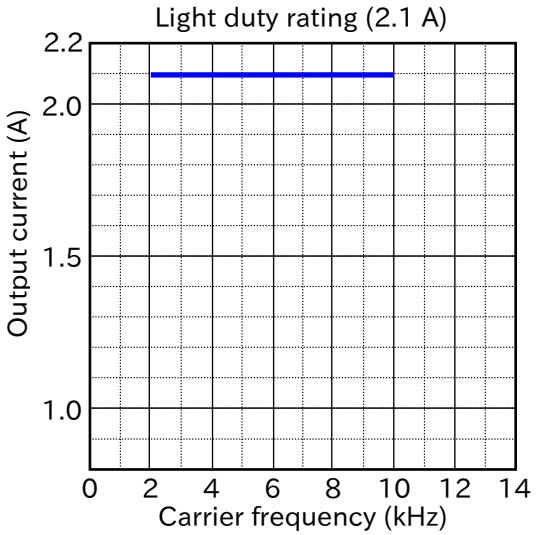

## C1-007S

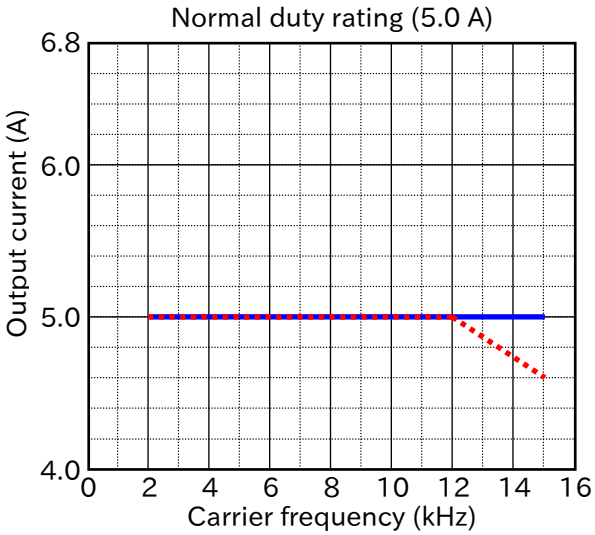


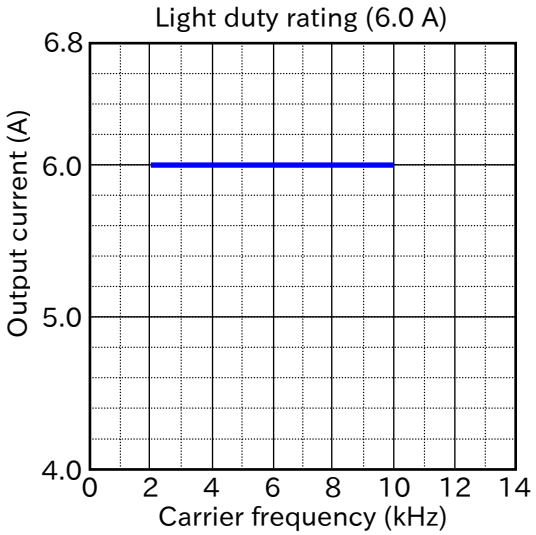


## C1-007H

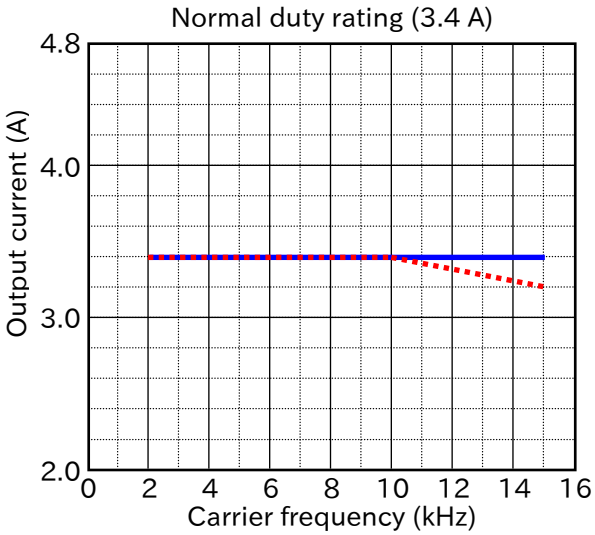


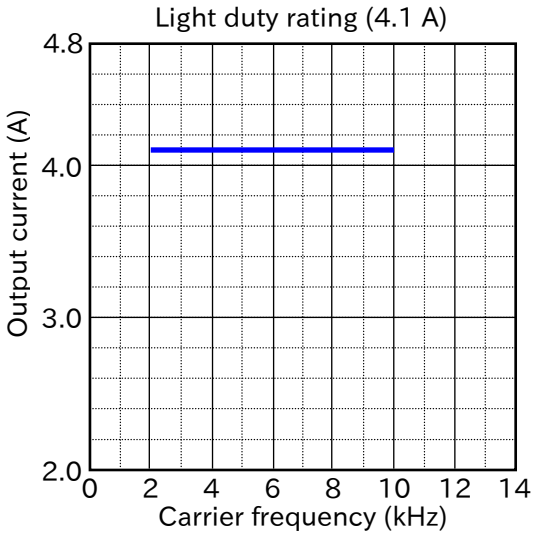


## C1-037L

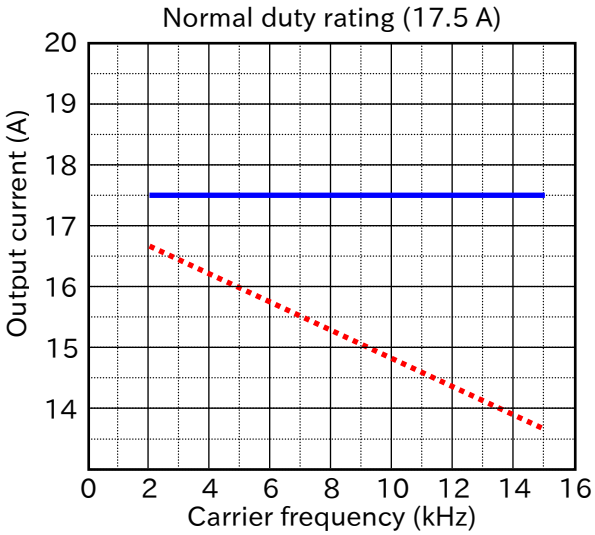


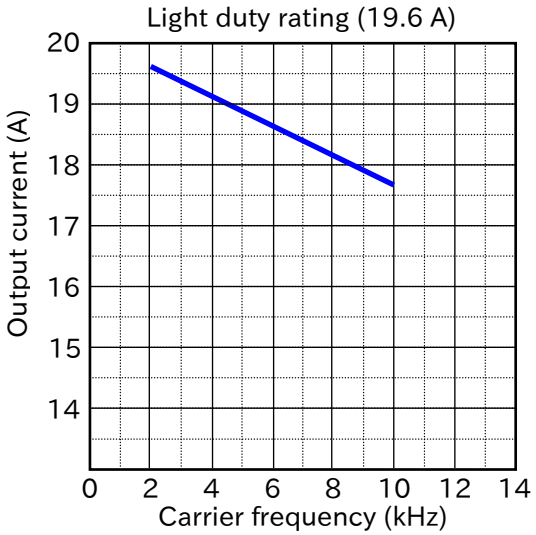

## C1-040H

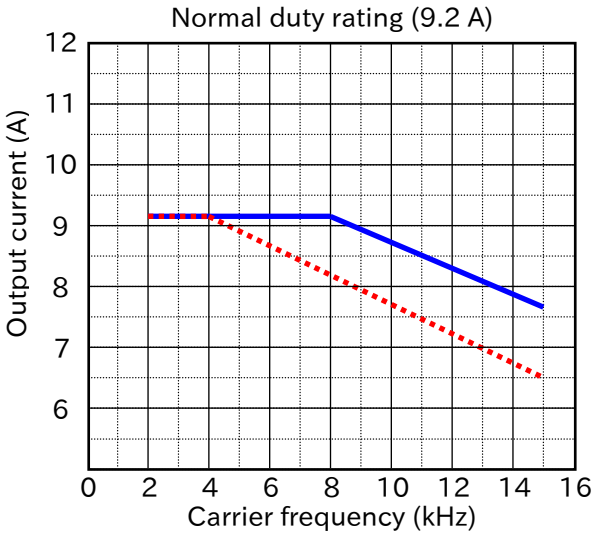


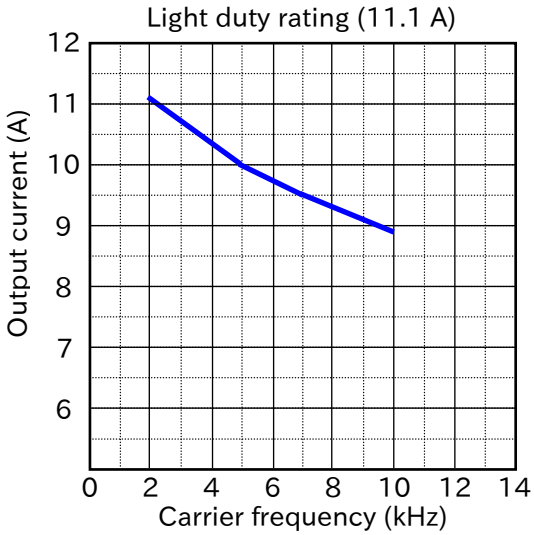


## C1-110L

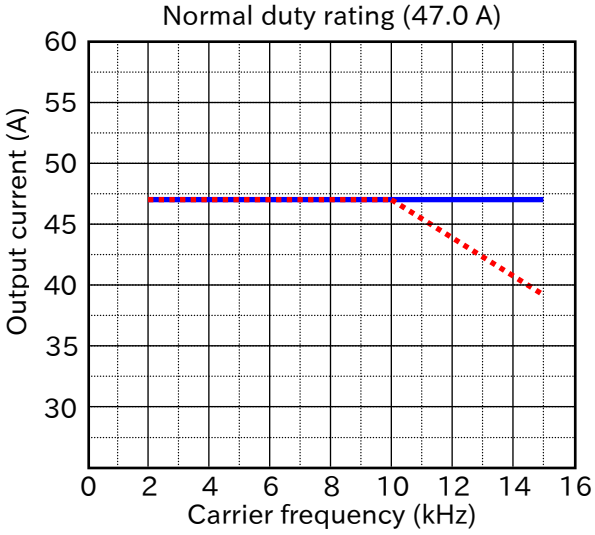


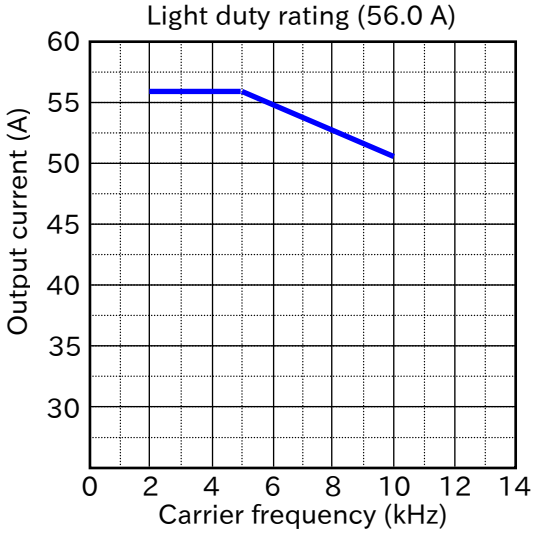


## C1-150L

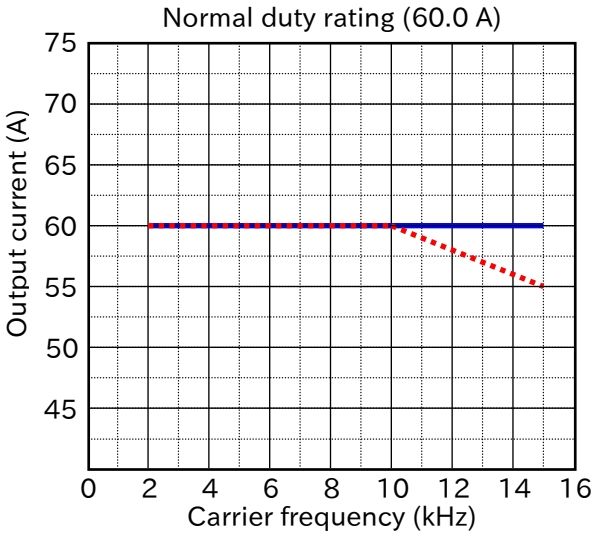


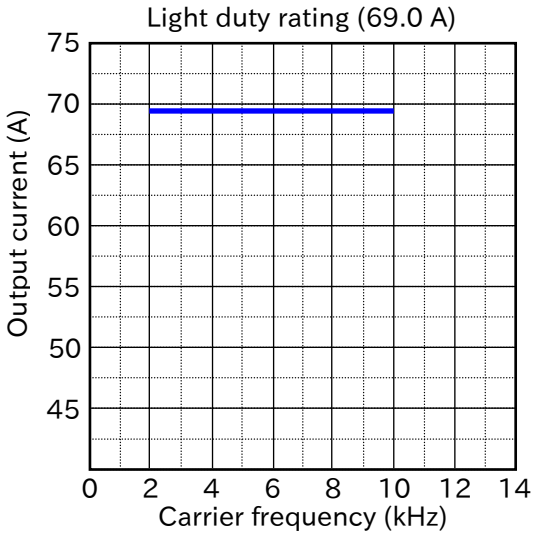

## C1-150H

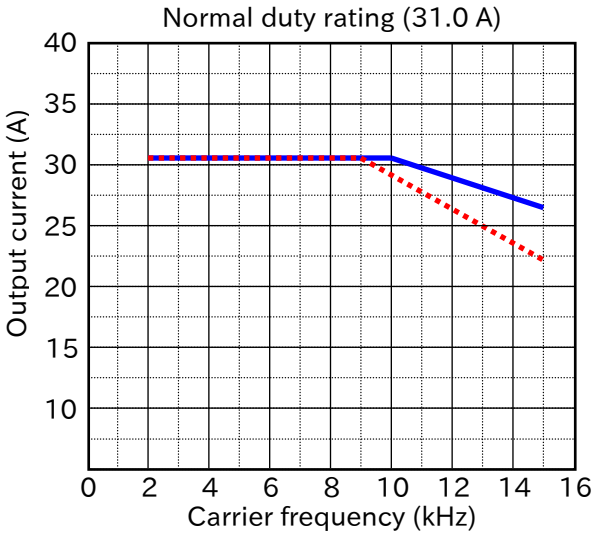
Normal duty rating (31.0 A)
Output current (A)
40
35
30
25
20
15
10
0
2
4
6
8
10
12
14
16
Carrier frequency (kHz)

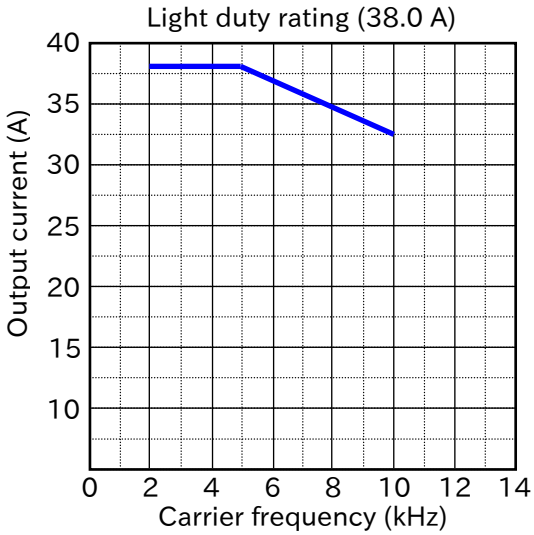
Light duty rating (38.0 A)
Output current (A)
40
35
30
25
20
15
10
0
2
4
6
8
10
12
14
Carrier frequency (kHz)

(Memo)

18

# Chapter 18 List of Parameters/Modbus Coil/Register Numbers

This chapter provides a list of monitor parameters, setting parameters, Modbus communication coils and register numbers. Monitor parameters and setting parameters accessible by Modbus communication are listed together with the holding register number.
Some parameters may not be displayed on the keypad due to display restrictions or the password function, or the settings may not be changed due to the soft lock function. In such a case, check "7.2 Functions Related to Keypad" or "15.4 How to Check When Something Is Wrong".

**18.1 List of Modbus Coil Numbers/Special Register Numbers ..... 18-1-1**
18.1.1 List of Modbus Coil Numbers ..... 18-1-1
18.1.2 List of Modbus Special Holding Registers ..... 18-1-3

**18.2 List of Parameters and Modbus Holding Registers ..... 18-2-1**
18.2.1 d Monitor Group ..... 18-2-1
18.2.2 F Parameter Group ..... 18-2-4
18.2.3 A Parameter Group ..... 18-2-5
18.2.4 b Parameter Group ..... 18-2-11
18.2.5 C Parameter Group ..... 18-2-19
18.2.6 List of Intelligent Input Terminal Functions ..... 18-2-24
18.2.7 List of Intelligent Output Terminal Functions ..... 18-2-25
18.2.8 H Parameter Group ..... 18-2-26
18.2.9 P Parameter Group ..... 18-2-28
18.2.10 U Parameter Group ..... 18-2-34

# 18.1 List of Modbus Coil Numbers/Special Register Numbers

## 18.1.1 List of Modbus Coil Numbers

| Coil number | Item name | R/W | Setting |
|---|---|---|---|
| 0000h | Not used | - | Not accessible |
| 0001h | RUN command | R/W | 1: Run / 0: Stop (enabled when [A002]/ [A202] = 03) |
| 0002h | Rotation direction command | R/W | 1: Reverse / 0: Forward (enabled when [A002]/ [A202] = 03) |
| 0003h | External trip (EXT) | R/W | 1: Trip |
| 0004h | Reset (RS) | R/W | 1: Reset |
| 0005h | (Reserved) | - | - |
| 0006h | (Reserved) | - | - |
| 0007h | Intelligent input terminal 1*1 | R/W | 1: ON / 0: OFF |
| 0008h | Intelligent input terminal 2*1 | R/W | 1: ON / 0: OFF |
| 0009h | Intelligent input terminal 3*1 | R/W | 1: ON / 0: OFF |
| 000Ah | Intelligent input terminal 4*1 | R/W | 1: ON / 0: OFF |
| 000Bh | Intelligent input terminal 5*1 | R/W | 1: ON / 0: OFF |
| 000Ch | Intelligent input terminal 6*1 | R/W | 1: ON / 0: OFF |
| 000Dh | Intelligent input terminal 7*1 | R/W | 1: ON / 0: OFF |
| 000Eh | (Reserved) | - | - |
| 000Fh | Operation status | R | 1: Run / 0: Stop (linked to [d003]) |
| 0010h | Rotation direction | R | 1: Reverse / 0: Forward (linked to [d003]) |
| 0011h | Inverter ready | R | 1: Ready / 0: Not ready |
| 0012h | (Reserved) | - | - |
| 0013h | RUN (Running) | R | 1: ON / 0: OFF |
| 0014h | FA1 (Constant-frequency reached) | R | 1: ON / 0: OFF |
| 0015h | FA2 (Set frequency overreached) | R | 1: ON / 0: OFF |
| 0016h | OL (Overload warning notice) | R | 1: ON / 0: OFF |
| 0017h | OD (Over deviation for PID control) | R | 1: ON / 0: OFF |
| 0018h | AL (Alarm) | R | 1: ON / 0: OFF |
| 0019h | FA3 (Set frequency reached) | R | 1: ON / 0: OFF |
| 001Ah | OTQ (Over-torque/under-torque) | R | 1: ON / 0: OFF |
| 001Bh | (Reserved) | - | - |
| 001Ch | UV (Undervoltage) | R | 1: ON / 0: OFF |
| 001Dh | TRQ (Torque limited) | R | 1: ON / 0: OFF |
| 001Eh | RNT (Accumulated operation time over) | R | 1: ON / 0: OFF |
| 001Fh | ONT (Accumulated power-on time over) | R | 1: ON / 0: OFF |
| 0020h | THM (Electronic thermal alarm (Motor)) | R | 1: ON / 0: OFF |
| 0021h | (Reserved) | - | - |
| 0022h | (Reserved) | - | - |
| 0023h | (Reserved) | - | - |
| 0024h | (Reserved) | - | - |
| 0025h | (Reserved) | - | - |
| 0026h | BRK (Brake release) | R | 1: ON / 0: OFF |
| 0027h | BER (Brake error) | R | 1: ON / 0: OFF |
| 0028h | ZS (Zero speed detection) | R | 1: ON / 0: OFF |
| 0029h | DSE (Speed over deviation) | R | 1: ON / 0: OFF |
| 002Ah | POK (Positioning complete) | R | 1: ON / 0: OFF |
| 002Bh | FA4 (Set frequency overreached 2) | R | 1: ON / 0: OFF |

*1. The input terminal can be turned on/off by Modbus communication. The inverter recognizes that the input terminal is in the ON state if either the input terminal by communication or the input signal by control terminal is on. However, as the Intelligent Input terminal monitor [d005] is a monitor of control terminal's input signal, input status via communication is not displayed.

| Coil number | Item name | R/W | Setting |
|---|---|---|---|
| 002Ch | FA5 (Set frequency reached 2) | R | 1: ON / 0: OFF |
| 002Dh | OL2 (Overload warning notice 2) | R | 1: ON / 0: OFF |
| 002Eh | Ai1Dc (Analog [Ai1] disconnection detection) | R | 1: ON / 0: OFF |
| 002Fh | Ai2Dc (Analog [Ai2] disconnection detection) | R | 1: ON / 0: OFF |
| 0030h | (Reserved) | - | - |
| 0031h | (Reserved) | - | - |
| 0032h | FBV (PID feedback comparison) | R | 1: ON / 0: OFF |
| 0033h | NDc (Communication line disconnection) | R | 1: ON / 0: OFF |
| 0034h | LOG1 (Logical operation result 1) | R | 1: ON / 0: OFF |
| 0035h | LOG2 (Logical operation result 2) | R | 1: ON / 0: OFF |
| 0036h | LOG3 (Logical operation result 3) | R | 1: ON / 0: OFF |
| 0037h | (Reserved) | - | - |
| 0038h | (Reserved) | - | - |
| 0039h | (Reserved) | - | - |
| 003Ah | WAC (Capacitor life warning) | R | 1: ON / 0: OFF |
| 003Bh | WAF (Cooling-fan life warning) | R | 1: ON / 0: OFF |
| 003Ch | FR (RUN command active) | R | 1: ON / 0: OFF |
| 003Dh | OHF (Cooling fin overheat warning) | R | 1: ON / 0: OFF |
| 003Eh | LOC (Low current signal) | R | 1: ON / 0: OFF |
| 003Fh | MO1 (General-purpose output 1) | R | 1: ON / 0: OFF |
| 0040h | MO2 (General-purpose output 2) | R | 1: ON / 0: OFF |
| 0041h | MO3 (General-purpose output 3) | R | 1: ON / 0: OFF |
| 0042h | (Reserved) | - | - |
| 0043h | (Reserved) | - | - |
| 0044h | (Reserved) | - | - |
| 0045h | IRDY (Inverter ready) | R | 1: ON / 0: OFF |
| 0046h | FWR (Forward rotation) | R | 1: ON / 0: OFF |
| 0047h | RVR (Reverse rotation) | R | 1: ON / 0: OFF |
| 0048h | MJA (Major failure) | R | 1: ON / 0: OFF |
| 0049h | Data writing in progress | R | 1: Writing in progress / 0: Normal state |
| 004Ah | CRC error*2 | R | 1: With error / 0: No error |
| 004Bh | Overrun error*2 | R | 1: With error / 0: No error |
| 004Ch | Framing error*2 | R | 1: With error / 0: No error |
| 004Dh | Parity error*2 | R | 1: With error / 0: No error |
| 004Eh | Sum check error*2 | R | 1: With error / 0: No error |
| 004Fh | (Reserved) | - | - |
| 0050h | WCAi1 (Window comparator [Ai1]) | R | 1: ON / 0: OFF |
| 0051h | WCAi2 (Window comparator [Ai2]) | R | 1: ON / 0: OFF |
| 0052h | (Reserved) | - | - |
| 0053h | (Reserved) | - | - |
| 0054h | FREF (Frequency reference by keypad) | R | 1: Keypad / 0: Other than keypad |
| 0055h | REF (RUN command by keypad) | R | 1: Keypad / 0: Other than keypad |
| 0056h | SETM (2nd motor selection) | R | 1: 2nd control selected / 0: 1st control selected |
| 0057h | (Reserved) | - | - |
| 0058h | (Reserved) | - | - |
| 0059h - | Not used | - | Not accessible |

*2. The content of the communication error is retained until an error reset is input (it can be reset during running).

## 18.1.2 List of Modbus Special Holding Registers

- The following table lists Modbus register numbers that do not directly correspond to monitor parameters and setting parameters. These registers are used for accessing coils by holding register R/W, enter command, and one register length register for Modbus mapping functions.
- For the number of the holding register corresponding to the monitor parameter/setting parameter that can be R/W from keypad, see "18.2 List of Parameters and Modbus Holding Registers".

| Register No. | Name | R/W | Data range | Resolution | Set value | Change during running | Page |
|---|---|---|---|---|---|---|---|
| 0001h<br>0002h | Refer to "18.2.2 F Parameter Group" [F001] | - | - | - | | - | 18-2-4 |
| 0003h | Inverter state A | R | 0: Initial state<br>2: Stop<br>3: Running<br>4: Free run stop<br>5: Jogging<br>6: DC braking<br>7: Retry<br>8: Trip<br>9: Undervoltage | - | | - | - |
| 0004h | Inverter status B | R | 0: Stop<br>1: Running<br>2: Trip | - | | - | - |
| 0005h | Inverter status C | R | 0 : ---<br>1: Stop<br>2: Decelerating<br>3: Constant speed<br>4: Accelerating<br>5: Forward<br>6: Reverse<br>7: Forward to reverse<br>8: Reverse to forward<br>9: Forward start<br>10: Reverse start | - | | - | - |
| 0006h | PID feedback | R/W | 0 to 10000 | 0.01(%) | | ✓ | 9-8-1 |
| 0007h to 0010h | (Reserved) | - | - | - | | - | - |
| 0011h to 004Eh | Refer to 18.2.1 "d monitor group" [d080] to [d090] | - | - | - | | - | 18-2-1 |
| 004Fh to 006Ch | (Reserved) | - | - | - | | - | - |
| 006Dh to 08FFh | Not used | - | Not accessible | - | | - | - |
| 0900h | Write EEPROM | W | 0: Motor Constant recalculate<br>1: Store set value in EEPROM<br>2 or bigger: Motor Constant recalculates Store set value in EEPROM | - | | × | - |
| 0901h | Not used | - | Not accessible | - | | - | - |
| 0902h | EEPROM write mode selection | W | EEPROM write mode selection | - | | × | - |
| 0903h to 1000h | Not used | - | Not accessible | - | | - | - |
| 1001h to 1E00h | Refer to the list of monitors and parameters. | - | - | - | | - | 18-2-1 |

| Register No. | Name | R/W | Data range | Resolution | Set value | Change during running | Page |
|---|---|---|---|---|---|---|---|
| 1E01h | Coil data 1*1 | R | 0 bit: Coil No. 0010h to 15 bit: Coil No. 001Fh | - | | - | 18-1-1 |
| 1E02h | Coil data 2*1 | R | 0 bit: Coil No. 0020h to 15 bit: Coil No. 002Fh | - | | - | 18-1-1 |
| 1E03h | Coil data 3*1 | R | 0 bit: Coil No. 0030h to 15 bit: Coil No. 003Fh | - | | - | 18-1-1 |
| 1E04h | Coil data 4*1 | R | 0 bit: Coil No. 0040h to 15 bit: Coil No. 004Fh | - | | - | 18-1-1 |
| 1E05h | Coil data 5*1 | R | 0 bit: Coil No. 0050h to 8 bit: Coil No. 0058h | - | | - | 18-1-1 |
| 1E06h to 1E18h | (Reserved) | - | - | - | | - | - |
| 1E19h 1E20h | Not used | - | Not accessible | - | | - | - |
| 1E21h | Output frequency monitor [d001]*2 | R | 0 to 59000 | 0.01 (Hz) | | - | 11-3-1 |
| 1E22h | PID feedback value monitor [d004]*2 | R | 0 to 65535 | 0.01 (Hz) | | - | 11-3-1 |
| 1E23h | Output frequency scale conversion monitor [d007]*2 | R | 0 to 65535 | 0.01 (Hz) | | - | 11-3-1 |
| 1E24h | Detect speed monitor [d008]*2 | R | −32768 to +32767 | 0.01 (Hz) | | - | 11-3-1 |
| 1E25h | Trip monitor 1 Output frequency [d081]*2 | R | 0 to 59000 | 0.01 (Hz) | | - | 11-3-1 |
| 1E26h to 1F00h | Not used | - | Not accessible | - | | - | - |
| 1F01h | Coil data 0 | R/W | 0 bit: Coil No. 0001h to 15 bit: Coil No. 000Fh | - | | ✓ | 18-1-1 |
| 1F02h to 1F1Dh | (Reserved)*3 | - | - | - | | - | - |
| 1F1Eh to 1F30h | Not used | - | Not accessible | - | | - | - |
| 1F31h | Output frequency setting or monitor [F001]*2 | R/W | 0, Minimum frequency to Maximum frequency | 0.01 (Hz) | | ✓ | 11-3-1 |
| 1F32h | Acceleration time 1 setting or monitor, 1st-motor [F002]*2 | R/W | 0 to 65535 | 0.01 (s) | | ✓ | 11-3-1 |
| 1F33h | Deceleration time 1 setting or monitor, 1st-motor [F003]*2 | R/W | 0 to 65535 | 0.01(s) | | ✓ | 11-3-1 |
| 1F34h | Multi-speed 0, 1st-motor [A020]*2 | R/W | 0, Minimum frequency to Maximum frequency, 1st-motor | 0.01 (Hz) | | ✓ | 11-3-1 |
| 1F35h | Multi-speed 1 [A021]*2 | R/W | 0, Minimum frequency to Maximum frequency | 0.01 (Hz) | | ✓ | 11-3-1 |
| 1F36h | Multi-speed 2 [A022]*2 | R/W | 0, Minimum frequency to Maximum frequency | 0.01 (Hz) | | ✓ | 11-3-1 |
| 1F37h | Multi-speed 3 [A023]*2 | R/W | 0, Minimum frequency to Maximum frequency | 0.01 (Hz) | | ✓ | 11-3-1 |
| 1F38h | Upper frequency limit, 1st-motor [A061]*2 | R/W | 0, Lower frequency limit, 1st-motor to Maximum frequency, 1st-motor | 0.01 (Hz) | | ✓ | 11-3-1 |
| 1F39h | Lower frequency limit, 1st-motor [A062]*2 | R/W | 0, Minimum frequency to Upper frequency limit, 1st-motor | 0.01 (Hz) | | ✓ | 11-3-1 |
| 1F3Ah | Acceleration stop frequency [A069]*2 | R/W | 0 to 59000 | 0.01 (Hz) | | ✓ | 11-3-1 |
| 1F3Bh | Add frequency [A145]*2 | R/W | 0 to 59000 | 0.01 (Hz) | | ✓ | 11-3-1 |
| 1F3Ch | Deceleration stop frequency [A154]*2 | R/W | 0 to 59000 | 0.01 (Hz) | | ✓ | 11-3-1 |
| 1F3Dh | PID sleep start level [A156]*2 | R/W | 0 to 59000 | 0.01 (Hz) | | ✓ | 11-3-1 |
| 1F3Eh | Frequency matching minimum restart frequency [b007]*2 | R/W | 0 to 59000 | 0.01 (Hz) | | ✓ | 11-3-1 |
| 1F3Dh to 2102h | Not used | - | Not accessible | - | | - | - |

*1. Coil data 0 to 5 are each composed of 16 coil data. Since the inverter communication EzCOM does not support coils, use these holding registers when the coils need to be accessed.
*2. This is a 2-register length parameter that can be accessed as a 1-register length parameter. For more information, see "11.3 Modbus Mapping Function".
*3. Do not write to the holding register 1F02h to 1F1Dh.

# 18.2 List of Parameters and Modbus Holding Registers

- In the default condition, the data part (0.00 (Hz) in the case of stopped state) of [d001] is always displayed after the power is turned on. To change the monitor at power-on, change the setting of "Initial display selection [b038]".
- If the parameter code cannot be displayed, or if the code and setting data can be displayed but cannot be changed, the display restrictions or Soft-Lock may be activated. For more information, see "7.2 Functions Related to Keypad" or "15.4.1 Troubleshooting Other Than Trip and Warning".
- The d monitor group can only be Read, and the rest of the parameters can be R/W unless otherwise noted.
- In the table below, Modbus holding register numbers may be discontinuous, but do not access the holding registers that is not listed.

## 18.2.1 d Monitor Group

| Code | Name | Data range | Change during running | Modbus communication | | | Page |
|---|---|---|---|---|---|---|---|
| | | | | Register No. | Data range | Resolution | |
| d001 | Output frequency monitor | 0.00 to 590.00 (Hz) | ✓ | 1001h (High)<br>1002h (Low) | 0 to 59000 | 0.01 | 10-1-1 |
| d002 | Output current monitor | 0.00 to 655.35 (A) | - | 1003h | 0 to 65535 | 0.01 | 10-1-2 |
| d003 | Rotation direction monitor | F (Forward) / o (Stop) / r (Reverse) | - | 1004h | 0 to 2 | - | 10-1-2 |
| d004 | PID feedback value monitor | 0.00 to 100.00<br>(0.00 to 9999.00 depending on [A075] gain) | - | 1005h (High)<br>1006h (Low) | 0 to 1000<br>(0 to 99990) | 0.1 | 9-8-1<br>10-4-1 |
| d005 | Input terminal monitor | 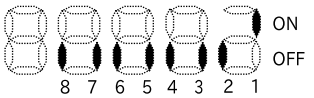 <br>(Example) 1, 2: ON<br>3 to 8: OFF | - | 1007h | $2^0$: (terminal 1) to<br>$2^7$: (terminal 8) | Bit | 10-2-1 |
| d006 | Output terminal monitor | 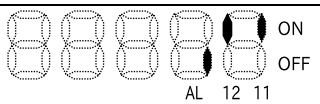 <br>(Example) 11, 12: ON<br>Relay: OFF | - | 1008h | $2^0$: (11)<br>$2^1$: (12)<br>$2^6$: (Relay) | Bit | |
| d007 | Output frequency scale conversion monitor | 0.00 to 590.00 (0.00 to 58994.10 depending on [b086] conversion) | ✓ | 1009h (High)<br>100Ah (Low) | 0 to 5899410 | 0.01 | 10-1-1 |
| d008 | Detect speed monitor | -590.00 to +590.00 (Hz) | - | 100Bh (High)<br>100Ch (Low) | -59000 to 59000 | 0.01 | 10-1-3 |
| d009 | Torque reference monitor | -200 to 200 (%) | - | 100Dh | -200 to +200 | 1 | 10-1-4 |
| d010 | Torque bias monitor | -200 to 200 (%) | - | 100Eh | -200 to +200 | 1 | |
| d012 | Output torque monitor | -200 to 200 (%) | - | 1010h | -200 to +200 | 1 | |
| d013 | Output voltage monitor | 0.0 to 600.0 (V) | - | 1011h | 0 to 6000 | 0.1 | 10-1-6 |
| d014 | Input power monitor | 0.0 to 100.0 (kW) | - | 1012h | 0 to 1000 | 0.1 | 10-1-7 |
| d015 | Accumulated input power monitor | 0.0 to 999900.0<br>(Unit: 1 kW × [b079]) | - | 1013h (High)<br>1014h (Low) | 0 to 9999000 | 1 | |
| d016 | Accumulated RUN time monitor | 0 to 999000 (hr) | - | 1015h (High)<br>1016h (Low) | 0 to 999000 | 1 | 10-3-1 |
| d017 | Accumulated power-on time monitor | 0 to 999000 (hr) | - | 1017h (High)<br>1018h (Low) | 0 to 999000 | 1 | |
| d018 | Cooling fin temperature monitor | -20.0 to 150.0 (˚C) | - | 1019h | -200 to 1500 | 0.1 | 10-3-2 |

| Code | Name | Data range | Change during running | Modbus communication | | | Page |
|---|---|---|---|---|---|---|---|
| | | | | Register No. | Data range | Resolution | |
| d022 | Life assessment monitor | Life warning<br>Normal<br>2 1<br>1: Electrolytic capacitor on board<br>2: Cooling fan | - | 101Dh | $2^0$ : Electrolyte capacitor on board<br>$2^1$ : Cooling fan | 1 | 10-3-3 |
| d023 | Program counter | 0 to 1024 | - | 101Eh | 0 to 1024 | 1 | 10-4-1 |
| d024 | Program No. monitor | 0 to 9999 | - | 101Fh | 0 to 9999 | 1 | |
| d025 | User monitor-0 | -2147483647 to 2147483647 | - | 102Eh (High)<br>102Fh (Low) | -2147483647 to 2147483647 | 1 | |
| d026 | User monitor-1 | -2147483647 to 2147483647 | - | 1030h (High)<br>1031h (Low) | -2147483647 to 2147483647 | 1 | |
| d027 | User monitor-2 | -2147483647 to 2147483647 | - | 1032h (High)<br>1033h (Low) | -2147483647 to 2147483647 | 1 | |
| d029 | Position reference monitor | -268435455 to 268435455 (pls) | - | 1036h (High)<br>1037h (Low) | -268435455 to 268435455 | 1 | 10-1-5 |
| d030 | Current position monitor | -268435455 to 268435455 (pls) | - | 1038h (High)<br>1039h (Low) | -268435455 to 268435455 | 1 | |
| d050 | Dual monitor | Displays the monitor data selected in [b160] and [b161]. | - | - | - | - | 10-3-6 |
| d060 | Inverter mode monitor | I-C: IM motor, Normal duty (ND)<br>I-L: IM motor, Light duty (LD)<br>H-I : IM-motor, WJ200 high frequency compatibility Mode<br>P : PM motor | - | 1057h | 0 to 3 | 1 | 10-3-4 |
| d062 | Frequency input source monitor | 00: Keypad (Multi-speed 0)<br>01 to 15: Multi-speed 1 to 15<br>16: Jogging<br>18: Modbus communication<br>19: Option<br>21: External POT*1<br>22: Pulse input<br>23: Calculation function result<br>24: EzSQ<br>25: [Ai1] terminal input<br>26: [Ai2] terminal input<br>27: [Ai1] terminal input + [Ai2] terminal input | - | 1059h | 0 to 27 | 1 | 10-3-5 |
| d063 | RUN command input source monitor | 01: Control terminal<br>02: Keypad (RUN-key)<br>03: Modbus communication<br>04: Option | - | 105Ah | 1 to 4 | 1 | |
| d080 | Trip count monitor | 0 to 65535 (times) | - | 0011h | 0 to 65535 | 1 | 10-5-1 |
| d081 | Trip monitor 1 | Trip code (E01.n to E99.n) | - | 0012h | 0 to 99*2 | - | |
| | | Inverter status at Trip (Above n: 0 to 9) | - | 0013h | 0 to 9 | - | |
| | | Output frequency at Trip (Hz) | - | 0014h (High)<br>0015h (Low) | 0 to 59000 | 0.01 | |
| | | Output current at Trip (A) | - | 0016h | Output current | 0.01 | |
| | | DC bus voltage at Trip (VDC) | - | 0017h | DC bus voltage | 0.1 | |
| | | Accumulated RUN time at Trip (hr) | - | 0018h (High)<br>0019h (Low) | Accumulated RUN time | 1 | |
| | | Accumulated power-on time at Trip (hr) | - | 001Ah (High)<br>001Bh (Low) | Accumulated power-on time | 1 | |
| d082 | Trip monitor 2 | Trip code (E01.n to E99.n) | - | 001Ch | 0 to 99*2 | - | |
| | | Inverter status at Trip (Above n: 0 to 9) | - | 001Dh | 0 to 9 | - | |
| | | Output frequency at Trip (Hz) | - | 001Eh (High)<br>001Fh (Low) | 0 to 59000 | 0.01 | |
| | | Output current at Trip (A) | - | 0020h | Output current | 0.01 | |
| | | DC bus voltage at Trip (VDC) | - | 0021h | DC bus voltage | 0.1 | |
| | | Accumulated RUN time at Trip (hr) | - | 0022h (High)<br>0023h (Low) | Accumulated RUN time | 1 | |
| | | Accumulated power-on time at Trip (hr) | - | 0024h (High)<br>0025h (Low) | Accumulated power-on time | 1 | |

*1. In case that the optional remote operator with potentiometer (OPE-SR/OPE-SR mini) is connected.
*2. “0” means no tripping factor.

| Code | Name | Data range | Change during running | Modbus communication | | | Page |
|---|---|---|---|---|---|---|---|
| | | | | Register No. | Data range | Resolution | |
| d083 | Trip monitor 3 | Trip code (E01.n to E99.n) | - | 0026h | 0 to 99*1 | - | 10-5-1 |
| | | Inverter status at Trip (Above n: 0 to 9) | - | 0027h | 0 to 9 | - | |
| | | Output frequency at Trip (Hz) | - | 0028h (High)<br>0029h (Low) | 0 to 59000 | 0.01 | |
| | | Output current at Trip (A) | - | 002Ah | Output current | 0.01 | |
| | | DC bus voltage at Trip (VDC) | - | 002Bh | DC bus voltage | 0.1 | |
| | | Accumulated RUN time at Trip (hr) | - | 002Ch (High)<br>002Dh (Low) | Accumulated RUN time | 1 | |
| | | Accumulated power-on time at Trip (hr) | - | 002Eh (High)<br>002Fh (Low) | Accumulated power-on time | 1 | |
| d084 | Trip monitor 4 | Trip code (E01.n to E99.n) | - | 0030h | 0 to 99*1 | - | |
| | | Inverter status at Trip (Above n: 0 to 9) | - | 0031h | 0 to 9 | - | |
| | | Output frequency at Trip (Hz) | - | 0032h (High)<br>0033h (Low) | 0 to 59000 | 0.01 | |
| | | Output current at Trip (A) | - | 0034h | Output current | 0.01 | |
| | | DC bus voltage at Trip (VDC) | - | 0035h | DC bus voltage | 0.1 | |
| | | Accumulated RUN time at Trip (hr) | - | 0036h (High)<br>0037h (Low) | Accumulated RUN time | 1 | |
| | | Accumulated power-on time at Trip (hr) | - | 0038h (High)<br>0039h (Low) | Accumulated power-on time | 1 | |
| d085 | Trip monitor 5 | Trip code (E01.n to E99.n) | - | 003Ah | 0 to 99*1 | - | |
| | | Inverter status at Trip (Above n: 0 to 9) | - | 003Bh | 0 to 9 | - | |
| | | Output frequency at Trip (Hz) | - | 003Ch (High)<br>003Dh (Low) | 0 to 59000 | 0.01 | |
| | | Output current at Trip (A) | - | 003Eh | Output current | 0.01 | |
| | | DC bus voltage at Trip (VDC) | - | 003Fh | DC bus voltage | 0.1 | |
| | | Accumulated RUN time at Trip (hr) | - | 0040h (High)<br>0041h (Low) | Accumulated RUN time | 1 | |
| | | Accumulated power-on time at Trip (hr) | - | 0042h (High)<br>0043h (Low) | Accumulated power-on time | 1 | |
| d086 | Trip monitor 6 | Trip code (E01.n to E99.n) | - | 0044h | 0 to 99*1 | - | |
| | | Inverter status at Trip (Above n: 0 to 9) | - | 0045h | 0 to 9 | - | |
| | | Output frequency at Trip (Hz) | - | 0046h (High)<br>0047h (Low) | 0 to 59000 | 0.01 | |
| | | Output current at Trip (A) | - | 0048h | Output current | 0.01 | |
| | | DC bus voltage at Trip (VDC) | - | 0049h | DC bus voltage | 0.1 | |
| | | Accumulated RUN time at Trip (hr) | - | 004Ah (High)<br>004Bh (Low) | Accumulated RUN time | 1 | |
| | | Accumulated power-on time at Trip (hr) | - | 004Ch (High)<br>004Dh (Low) | Accumulated power-on time | 1 | |
| d090 | Warning monitor | Warning code | - | 004Eh | Warning code | - | 10-5-2 |
| d102 | DC bus voltage monitor | 0.0 to 1000.0 (VDC) | | 1026h | 0 to 10000 | 0.1 | 10-1-8 |
| d103 | BRD load ratio monitor | 0.0 to 100.0 (%) | - | 1027h | 0 to 1000 | 0.1 | 10-1-9 |
| d104 | Electronic thermal load ratio monitor (Motor) | 0.0 to 100.0 (%) | - | 1028h | 0 to 1000 | 0.1 | 10-1-10 |
| d130 | Analog input [Ai1] monitor | 0 to 1023 | - | 108Eh | 0 to 1023 | 1 | 10-2-2 |
| d131 | Analog input [Ai2] monitor | 0 to 1023 | - | 108Fh | 0 to 1023 | 1 | |
| d133 | Pulse input [PLA] monitor | 0.00 to 100.00 (%) | - | 1091h | 0 to 10000 | 0.01 | |
| d153 | PID deviation monitor | -100. 00 to 100.00 (%) (-9999.00 to 9999.00 depending on [A075]) | - | 10AEh (High)<br>10AFh (Low) | -999900 to 999900 | 0.01 | 10-4-1 |
| d155 | PID output monitor | -100.00 to 100.00 (%) | - | 10B2h (High)<br>10B3h (Low) | -10000 to 10000 | 0.01 | |

*1. “0” means no tripping factor.

## 18.2.2 F Parameter Group

| Code | Name | Data range | Initial value | Set value | Change during running | Modbus communication | | | Page |
|---|---|---|---|---|---|---|---|---|---|
| | | | | | | Register No. | Data Range | Resolution | |
| F001 | Output frequency setting or monitor | 0.00, Minimum frequency to Maximum frequency (Hz) | 0.00 | | ✓ | 0001h (High)<br>0002h (Low) | 0 to Maximum frequency | 0.01 | 9-2-1 |
| | | When PID function is enabled: 0.00 to 100.00 (%) (0.00 to 9999.00 (%) depending on [A075] gain) | | | | | 0 to 999900 | 0.01 | 9-2-1<br>9-8-4 |
| F002 | Acceleration time 1 setting or monitor, 1st-motor | 0.00 to 3600.00 (s) | 10.00 (30.00)*1 | | ✓ | 1103h (High)<br>1104h (Low) | 0 to 360000 | 0.01 | 9-3-2 |
| F202 | Acceleration time 1 setting or monitor, 2nd-motor | 0.00 to 3600.00 (s) | 10.00 (30.00)*1 | | ✓ | 2103h (High)<br>2104h (Low) | 0 to 360000 | 0.01 | |
| F003 | Deceleration time 1 setting or monitor, 1st-motor | 0.00 to 3600.00 (s) | 10.00 (30.00)*1 | | ✓ | 1105h (High)<br>1106h (Low) | 0 to 360000 | 0.01 | |
| F203 | Deceleration time 1 setting or monitor, 2nd-motor | 0.00 to 3600.00 (s) | 10.00 (30.00)*1 | | ✓ | 2105h (High)<br>2106h (Low) | 0 to 360000 | 0.01 | |
| F004 | RUN-key command rotation direction | 00: Forward rotation<br>01: Reverse rotation | 00 | | ✓*2 | 1107h | 0 to 1 | - | 9-1-2 |

*1. When in WJ200 high frequency compatible mode.
*2. If the operation direction is changed during running, the behavior will be the same as when RUN command is switched in the opposite direction. (If the setting is changed to "Reverse (01)" during forward operation, the inverter decelerates to 0 Hz and then accelerate in the reverse direction.)

## 18.2.3 A Parameter Group

| Code | Name | Data range | Initial value | Set value | Change during running | Modbus communication | | | Page |
|---|---|---|---|---|---|---|---|---|---|
| | | | | | | Register No. | Data Range | Resolution | |
| A001 | Frequency input source selection, 1st-motor | 00: External operator POT*1<br>01: Control terminal<br>02: Parameter setting<br>03: Modbus communication<br>04: Option<br>06: Pulse input<br>07: Program function (EzSQ)<br>10: Calculation function result | 02/<br>01/<br>01*2 | | × | 1201h | 0 to 4, 6,7,10 | - | 9-2-1 |
| A201 | Frequency input source selection, 2nd-motor | | | | × | 2201h | | - | |
| A002 | RUN command input source selection, 1st-motor | 01: Control terminal<br>02: Keypad (RUN-key)<br>03: Modbus communication<br>04: Option | 02/<br>01/<br>01*2 | | × | 1202h | 1 to 4 | - | 9-1-1 |
| A202 | RUN command input source selection, 2nd-motor | | | | × | 2202h | 1 to 4 | - | |
| A003 | Base frequency, 1st-motor | 30.0 to Maximum frequency, 1st-motor (Hz) | 60.0/<br>50.0/<br>50.0*2<br>(590.0)*3 | | × | 1203h | 300 to Maximum frequency, 1st-motor | 0.1 | 8-1-5 |
| A203 | Base frequency, 2nd-motor | 30.0 to Maximum frequency, 2nd-motor (Hz) | | | × | 2203h | 300 to Maximum frequency, 2nd-motor | 0.1 | |
| A004 | Maximum frequency, 1st-motor | Base frequency, 1st-motor to 590.0 (Hz) | 60.0/<br>50.0/<br>50.0*2<br>(590.0)*3 | | × | 1204h | Base frequency, 1st-motor to 5900 | 0.1 | |
| A204 | Maximum frequency, 2nd-motor | Maximum frequency, 2nd-motor to 590.0 (Hz) | | | × | 2204h | Maximum frequency, 2nd-motor to 5900 | 0.1 | |
| A005 | [AT] selection | 00: Switching between [Ai1] and [Ai2]<br>02: Switching between [Ai1] and POT*1<br>03: Switching between [Ai2] and POT*1 | 00 | | × | 1205h | 0, 2, 3 | - | 9-2-4 |
| A011 | [Ai1] Start value | 0.00 to 590.00 (Hz) | 0.00 | | ✓ | 120Bh (High)<br>120Ch (Low) | 0 to 59000 | 0.01 | 9-15-4 |
| A012 | [Ai1] End value | 0.00 to 590.00 (Hz) | 0.00 | | ✓ | 120Dh (High)<br>120Eh (Low) | 0 to 59000 | 0.01 | |
| A013 | [Ai1] Start rate | 0 to [Ai1] End ratio (%) | 0 | | ✓ | 120Fh | 0 to 100 | 1 | |
| A014 | [Ai1] End rate | [Ai1] Start ratio to 100 (%) | 100 | | ✓ | 1210h | 0 to 100 | 1 | |
| A015 | [Ai1] Start value selection | 00: [Ai1] Start value [A011]<br>01: 0 Hz or 0% | 01 | | ✓ | 1211h | 0 to 1 | - | |
| A016 | Analog input filter time constant | 1 to 30: Set value × 2ms first-order filter<br>31: 500 ms filter ±0.1Hz with hysteresis | 1 | | ✓ | 1212h | 1 to 31 | - | |
| A017 | EzSQ enable selection | 00: Disable<br>01: [PRG] terminal<br>02: Always | 00 | | ✓ | 1213h | 0 to 2 | - | 12-2-2 |
| A019 | Multi-speed operation selection | 00: 16 speeds ([CF1] to [CF4] binary input)<br>01: 8 speeds (SF1] to [SF7] bit input) | 00 | | × | 1215h | 0 to 1 | - | 9-2-7 |

*1. In case that the optional remote operator with potentiometer (OPE-SR/OPE-SR mini) is connected.
*2. The default settings when initialize by setting 00/01/03 to "Initialize data selection [b085]".
*3. When in WJ200 high frequency compatible mode.

| Code | Name | Data range | Initial value | Set value | Change during running | Modbus communication | | | Page |
|---|---|---|---|---|---|---|---|---|---|
| | | | | | | Register No. | Data Range | Resolution | |
| A020 | Multi-speed 0, 1st-motor | 0.00, Minimum frequency to Maximum frequency, 1st-motor (Hz) | 0.00/ 6.00/ 0.00*2 | | ✓ | 1216h (High) 1217h (Low) | 0, Minimum frequency to Maximum frequency, 1st-motor | 0.01 | 9-2-7 |
| A220 | Multi-speed 0, 2nd-motor | 0.00, Minimum frequency to Maximum frequency, 2nd-motor (Hz) | | | ✓ | 2216h (High) 2217h (Low) | 0, Minimum frequency to Maximum frequency, 2nd-motor | 0.01 | |
| A021 | Multi-speed 1 | 0.00, Minimum frequency to Maximum frequency (Hz) | 0.00 | | ✓ | 1218h (High) 1219h (Low) | 0, Minimum frequency to Maximum frequency | 0.01 | |
| A022 | Multi-speed 2 | | | | ✓ | 121Ah (High) 121Bh (Low) | | | |
| A023 | Multi-speed 3 | | | | ✓ | 121Ch (High) 121Dh (Low) | | | |
| A024 | Multi-speed 4 | | | | ✓ | 121Eh (High) 121Fh (Low) | | | |
| A025 | Multi-speed 5 | | | | ✓ | 1220h (High) 1221h (Low) | | | |
| A026 | Multi-speed 6 | | | | ✓ | 1222h (High) 1223h (Low) | | | |
| A027 | Multi-speed 7 | | | | ✓ | 1224h (High) 1225h (Low) | | | |
| A028 | Multi-speed 8 | | | | ✓ | 1226h (High) 1227h (Low) | | | |
| A029 | Multi-speed 9 | | | | ✓ | 1228h (High) 1229h (Low) | | | |
| A030 | Multi-speed 10 | | | | ✓ | 122Ah (High) 122Bh (Low) | | | |
| A031 | Multi-speed 11 | | | | ✓ | 122Ch (High) 122Dh (Low) | | | |
| A032 | Multi-speed 12 | | | | ✓ | 122Eh (High) 122Fh (Low) | | | |
| A033 | Multi-speed 13 | | | | ✓ | 1230h (High) 1231h (Low) | | | |
| A034 | Multi-speed 14 | | | | ✓ | 1232h (High) 1233h (Low) | | | |
| A035 | Multi-speed 15 | | | | ✓ | 1234h (High) 1235h (Low) | | | |
| A038 | Jogging frequency | Minimum frequency to 10.00 (Hz) (100.00 (Hz))*3 | 6.00 | | ✓ | 1238h | Minimum frequency adjustment to 1000 (10000)*3 | 0.01 | 9-2-10 |
| A039 | Jogging stop mode selection | 00: Free run at Jogging stop (Disable at run)<br>01: Deceleration stop at Jogging stop (Disable at run)<br>02: DC braking at Jogging stop (Disable at run)<br>03: Free run at Jogging stop (Enable at run)<br>04: Deceleration stop at Jogging stop (Enable at run)<br>DC braking at Jogging stop (Enable at run) | 04 | | ✓ | 1239h | 0 to 5 | - | |
| A041 | Torque boost mode selection, 1st-motor | 00: Manual torque boost<br>01: Automatic torque boost | 00 | | × | 123Bh | 0 to 1 | - | 9-5-5 |
| A241 | Torque boost mode selection, 2nd-motor | 00: Manual torque boost<br>01: Automatic torque boost | 00 | | × | 223Bh | 0 to 1 | - | |

*2. The default settings when initialize by setting 00/01/03 to "Initialize data selection [b085]".
*3. When in WJ200 high frequency compatible mode.

| Code | Name | Data range | Initial value | Set value | Change during running | Modbus communication | | | Page |
|---|---|---|---|---|---|---|---|---|---|
| | | | | | | Register No. | Data Range | Resolution | |
| A042 | Manual torque boost value, 1st-motor | 0.0 to 20.0 (%) | 1.0/ 1.0/ 5.0*2 | | ✓ | 123Ch | 0 to 200 | 0.1 | 9-5-5 |
| A242 | Manual torque boost value, 2nd-motor | | | | ✓ | 223Ch | 0 to 200 | 0.1 | |
| A043 | Manual torque boost peak speed, 1st-motor | 0.0 to 50.0 (%) | 5.0 | | ✓ | 123Dh | 0 to 500 | 0.1 | |
| A243 | Manual torque boost peak speed, 2nd-motor | | | | ✓ | 223Dh | 0 to 500 | 0.1 | |
| A044 | Control mode selection, 1st-motor | 00: [V/f] Constant torque characteristics (IM)<br>01: [V/f] Reducing torque characteristics (IM)<br>02: [V/f] Free V/f (IM)<br>03: Sensorless vector control (SLV) (IM) (Selectable only at ND) | 00 | | × | 123Eh | 0 to 3 | - | 9-5-1 |
| A244 | Control mode selection, 2nd-motor | | 00 | | × | 223Eh | 0 to 3 | - | |
| A045 | Output voltage gain, 1st-motor | 20 to 100 (%) | 100 | | ✓ | 123Fh | 20 to 100 | 1 | 8-1-5 |
| A245 | Output voltage gain, 2nd-motor | 20 to 100 (%) | 100 | | ✓ | 223Fh | 20 to 100 | 1 | |
| A046 | Automatic torque boost voltage compensation gain, 1st-motor | 0 to 255 | 100 | | ✓ | 1240h | 0 to 255 | 1 | 9-5-6 |
| A246 | Automatic torque boost voltage compensation gain, 2nd-motor | 0 to 255 | 100 | | ✓ | 2240h | 0 to 255 | 1 | |
| A047 | Automatic torque boost slip compensation gain, 1st-motor | 0 to 255 | 100 | | ✓ | 1241h | 0 to 255 | 1 | |
| A247 | Automatic torque boost slip compensation gain, 2nd-motor | 0 to 255 | 100 | | ✓ | 2241h | 0 to 255 | 1 | |
| A051 | DC braking selection | 00: Disable<br>01: Enable<br>02: Enable (Output frequency < [A052]) | 00 | | ✓ | 1245h | 0 to 2 | - | 9-7-2<br>9-7-11 |
| A052 | DC braking frequency | 0.00 to 60.00 (Hz) | 0.50 | | ✓ | 1246h | 0 to 6000 | 0.01 | |
| A053 | DC braking delay time | 0.0 to 5.0 (s) | 0.0 | | ✓ | 1247h | 0 to 50 | 0.1 | 9-7-11 |
| A054 | DC braking force | 0 to 100 (%) (Normal duty (ND)<br>0 to 70 (%) (Light duty (LD)) | 50 | | ✓ | 1248h | 0 to 100 (ND)<br>0 to 70 (LD) | 1 | 9-7-2<br>9-7-11 |
| A055 | DC braking active time at stop | 0.0 to 60.0 (s) | 0.5 | | ✓ | 1249h | 0 to 600 | 0.1 | 9-7-11 |
| A056 | DC braking operation method selection | 00: Edge operation<br>01: Level operation | 01 | | ✓ | 124Ah | 0 to 1 | - | |
| A057 | DC braking force at start | 0 to 100 (%) (Normal duty (ND)<br>0 to 70 (%) (Light duty (LD)) | 0 | | ✓ | 124Bh | 0 to 100 (ND)<br>0 to 70 (LD) | 1 | 9-7-2 |
| A058 | DC braking active time at start | 0.0 to 60.0 (s) | 0.0 | | ✓ | 124Ch | 0 to 600 | 0.1 | |
| A059 | Carrier frequency during DC braking*4 | 2.0 to 15.0 (kHz)<br>(Normal duty (ND))<br>2.0 to 10.0 (kHz)<br>(Light duty (LD)) | 5.0 | | ✓ | 124Dh | 20 to 150 (ND)<br>20 to 100 (LD) | 0.1 | - |

*2. The default settings when initialize by setting 00/01/03 to "Initialize data selection [b085]".
*4. This parameter is a dummy parameter. User setting is disabled. Carrier frequency in DC braking is shared with "Carrier frequency [b083]". In addition, if data is written within the data range by Modbus communication, no error will occur.

| Code | Name | Data range | Initial value | Set value | Change during running | Modbus communication | | | Page |
|---|---|---|---|---|---|---|---|---|---|
| | | | | | | Register No. | Data Range | Resolution | |
| A061 | Upper frequency limit, 1st-motor | 0.00,<br>Lower frequency limit, 1st-motor to Maximum frequency, 1st-motor (Hz) | 0.00 | | ✓ | 124Fh (High)<br>1250h (Low) | 0, Lower frequency limit, 1st-motor to Maximum frequency, 1st-motor | 0.01 | 9-4-1 |
| A261 | Upper Frequency limit, 2nd-motor | 0.00,<br>Lower Frequency limit, 2nd-motor to Maximum frequency, 2nd-motor (Hz) | 0.00 | | ✓ | 224Fh (High)<br>2250h (Low) | 0, Lower Frequency limit, 2nd-motor to Maximum frequency, 2nd-motor | 0.01 | |
| A062 | Lower frequency limit, 1st-motor | 0.00, Minimum frequency to Upper frequency limit, 1st-motor (Hz) | 0.00 | | ✓ | 1251h (High)<br>1252h (Low) | 0, Minimum frequency to Upper frequency limit, 1st-motor | 0.01 | |
| A262 | Lower Frequency limit, 2nd-motor | 0.00, Minimum frequency to Upper Frequency limit, 2nd-motor | 0.00 | | ✓ | 2251h (High)<br>2252h (Low) | 0, Minimum frequency to Upper Frequency limit, 2nd-motor | 0.01 | |
| A063 | Jump frequency 1 | 0.00 to 590.00 (Hz) | 0.00 | | ✓ | 1253h (High)<br>1254h (Low) | 0 to 59000 | 0.01 | 9-10-5 |
| A064 | Jump frequency width 1 | 0.00 to 10.00 (Hz)<br>(100.00 (Hz))*3 | 0.50 | | ✓ | 1255h | 0 to 1000<br>(10000)*3 | 0.01 | |
| A065 | Jump frequency 2 | 0.00 to 590.00 (Hz) | 0.00 | | ✓ | 1256h (High)<br>1257h (Low) | 0 to 59000 | 0.01 | |
| A066 | Jump frequency width 2 | 0.00 to 10.00 (Hz)<br>(100.00 (Hz))*3 | 0.50 | | ✓ | 1258h | 0 to 1000<br>(10000)*3 | 0.01 | |
| A067 | Jump frequency 3 | 0.00 to 590.00 (Hz) | 0.00 | | ✓ | 1259h (High)<br>125Ah (Low) | 0 to 59000 | 0.01 | |
| A068 | Jump frequency width 3 | 0.00 to 10.00 (Hz)<br>(100.00 (Hz))*3 | 0.50 | | ✓ | 125Bh | 0 to 1000<br>(10000)*3 | 0.01 | |
| A069 | Acceleration stop frequency | 0.00 to 590.00 (Hz) | 0.00 | | ✓ | 125Ch (High)<br>125Dh (Low) | 0 to 59000 | 0.01 | 9-3-4 |
| A070 | Acceleration stop time | 0.0 to 60.0 (s) | 0.0 | | ✓ | 125Eh | 0 to 600 | 0.1 | |
| A071 | PID enable | 00: Disable<br>01: Enable<br>02: Enable (with inverted output) | 00 | | ✓ | 125Fh | 0 to 2 | - | 9-8-1 |
| A072 | PID proportional gain | 0.00 to 25.00 | 1.00 | | ✓ | 1260h | 0 to 2500 | 0.01 | |
| A073 | PID integral time constant | 0.0 to 3600.0 (s) | 1.0 | | ✓ | 1261h | 0 to 36000 | 0.1 | |
| A074 | PID derivative gain | 0.00 to 100.00 (s) | 0.00 | | ✓ | 1262h | 0 to 10000 | 0.01 | |
| A075 | PID scale | 0.01 to 99.99 | 1.00 | | ✓ | 1263h | 1 to 9999 | 0.01 | |
| A076 | PID feedback input source selection | 00: [Ai2] terminal input (current input)<br>01: [Ai1] terminal input (voltage input)<br>02: Modbus communication<br>03: Pulse input<br>10: Calculation function result | 00 | | ✓ | 1264h | 0 to 3, 10 | - | |
| A077 | PID deviation inversion | 00: Disable<br>01: Enable | 00 | | ✓ | 1265h | 0 to 1 | - | |
| A078 | PID output range | 0.0 to 100.0 (%) | 0.0 | | ✓ | 1266h | 0 to 1000 | 0.1 | |
| A079 | PID feed-forward input source selection | 00: Disable<br>01: [Ai1] terminal input (voltage input)<br>02: [Ai2] terminal input (current input) | 00 | | ✓ | 1267h | 0 to 2 | - | |

*3. When in WJ200 high frequency compatible mode.

| Code | Name | Data range | Initial value | Set value | Change during running | Modbus communication | | | Page |
|---|---|---|---|---|---|---|---|---|---|
| | | | | | | Register No. | Data Range | Resolution | |
| A081 | AVR function selection, 1st-motor | 00: Always enable<br>01: Disable<br>02: Disable at deceleration | 02/<br>02/<br>01*2 | | ✓ | 1269h | 0 to 2 | - | 9-9-6 |
| A281 | AVR function selection, 2nd-motor | 00: Always enable<br>01: Disable<br>02: Disable at deceleration | 02/<br>02/<br>01*2 | | ✓ | 2269h | 0 to 2 | - | |
| A082 | Motor rated voltage, 1st-motor | 200V class: 200/ 215/ 220/ 230/ 240 (V)<br>400V class: 380/ 400/ 415/ 440/ 460/ 480 (V) | 200, 400/<br>230, 400/<br>220, 380*2 | | × | 126Ah | 0 (200)/<br>1 (215)/<br>2 (220)/<br>3 (230)/<br>4 (240)/<br>5 (380)/<br>6 (400)/<br>7 (415)/<br>8 (440)/<br>9 (460)/<br>10 (480) | - | 8-1-5<br>9-9-6 |
| A282 | Motor rated voltage, 2nd-motor | | | | × | 226Ah | | - | |
| A083 | AVR function output filter time constant | 0.000 to 10.000 (s) | 0.300 | | ✓ | 126Bh | 0 to 10000 | 0.001 | 9-9-6 |
| A084 | AVR function voltage gain during deceleration | 50 to 200 (%) | 100 | | ✓ | 126Ch | 50 to 200 | 1 | |
| A085 | Eco drive enable | 00: Disable<br>01: Enable | 00 | | ✓ | 126Dh | 0 to 1 | - | 9-5-7 |
| A086 | Eco drive response adjustment | 0.0 to 100.0 (%) | 50.0 | | ✓ | 126Eh | 0 to 1000 | 0.1 | |
| A092 | Acceleration time 2, 1st-motor | 0.00 to 3600.00 (s) | 10.00<br>(15.00)*3 | | ✓ | 1274h (High)<br>1275h (Low) | 0 to 360000 | 0.01 | 9-3-3 |
| A292 | Acceleration time 2, 2nd-motor | 0.00 to 3600.00 (s) | 10.00<br>(15.00)*3 | | ✓ | 226Fh (High)<br>2270h (Low) | 0 to 360000 | 0.01 | |
| A093 | Deceleration time 2, 1st-motor | 0.00 to 3600.00 (s) | 10.00<br>(15.00)*3 | | ✓ | 1276h (High)<br>1277h (Low) | 0 to 360000 | 0.01 | |
| A293 | Deceleration time 2, 2nd-motor | 0.00 to 3600.00 (s) | 10.00<br>(15.00)*3 | | ✓ | 2271h (High)<br>2272h (Low) | 0 to 360000 | 0.01 | |
| A094 | Accel/Decel change trigger selection, 1st-motor | 00: [2CH] terminal<br>01: Parameter setting<br>02: Switching only when rotation is reversed | 00 | | × | 1278h | 0 to 2 | - | |
| A294 | Accel/Decel change trigger selection, 2nd-motor | | 00 | | × | 2273h | | - | |
| A095 | Accel1 to Accel2 frequency transition point, 1st-motor | 0.00 to 590.00 (Hz) | 0.00 | | ✓ | 1279h (High)<br>127Ah (Low) | 0 to 59000 | 0.01 | |
| A295 | Accel1 to Accel2 frequency transition point, 2nd-motor | 0.00 to 590.00 (Hz) | 0.00 | | ✓ | 2274h (High)<br>2275h (Low) | 0 to 59000 | 0.01 | |
| A096 | Decel1 to Decel2 frequency transition point, 1st-motor | 0.00 to 590.00 (Hz) | 0.00 | | ✓ | 127Bh (High)<br>127Ch (Low) | 0 to 59000 | 0.01 | |
| A296 | Decel1 to Decel2 frequency transition point, 2nd-motor | 0.00 to 590.00 (Hz) | 0.00 | | ✓ | 2276h (High)<br>2277h (Low) | 0 to 59000 | 0.01 | |
| A097 | Acceleration curve selection | 00: Linear<br>01: S-curve<br>02: U-curve<br>03: Reverse U-curve<br>04: EL-S-curve | 01 | | × | 127Dh | 0 to 4 | - | 9-3-5 |

*2. The default settings when initialize by setting 00/01/03 to "Initialize data selection [b085]".
*3. When in WJ200 high frequency compatible mode.

| Code | Name | Data range | Initial value | Set value | Change during running | Modbus communication | | | Page |
|---|---|---|---|---|---|---|---|---|---|
| | | | | | | Register No. | Data Range | Resolution | |
| A098 | Deceleration curve selection | 00: Linear<br>01: S-curve<br>02: U-curve<br>03: Reverse U-curve<br>04: EL-S-curve | 01 | | × | 127Eh | 0 to 4 | - | 9-3-5 |
| A101 | [Ai2] start value | 0.00 to 590.00 (Hz) | 0.00 | | ✓ | 1281h (High)<br>1282h (Low) | 0 to 59000 | 0.01 | 9-15-4 |
| A102 | [Ai2] end value | 0.00 to 590.00 (Hz) | 0.00 | | ✓ | 1283h (High)<br>1284h (Low) | 0 to 59000 | 0.01 | |
| A103 | [Ai2] start ratio | 0 to [Ai2] End ratio (%) | 20 | | ✓ | 1285h | 0 to 100 | 1 | |
| A104 | [Ai2] end ratio | [Ai2] Start ratio to 100 (%) | 100 | | ✓ | 1286h | 0 to 100 | 1 | |
| A105 | [Ai2] start value selection | 00: [Ai2] Start value [A101]<br>01: 0Hz | 00 | | ✓ | 1287h | 0 to 1 | - | |
| A131 | Acceleration curve constant | 1 (bulge small) to 10 (bulge large) | 2 | | ✓ | 12A5h | 1 to 10 | 1 | 9-3-5 |
| A132 | Deceleration curve constant | 1 (bulge small) to 10 (bulge large) | 2 | | ✓ | 12A6h | 1 to 10 | 1 | |
| A141 | Frequency input selection 1 for calculation function | 00: Parameter setting<br>01: External POT*1<br>02: [Ai1] terminal input (voltage input)<br>03: [Ai2] terminal input (current input)<br>04: Modbus communication<br>05: Option<br>07: Pulse input | 02 | | ✓ | 12AFh | 0 to 7 | - | 9-2-16 |
| A142 | Frequency input selection 2 for calculation function | | 03 | | ✓ | 12B0h | | - | |
| A143 | Calculation function operator selection | 00: ADD [A141] + [A142]<br>01: SUB [A141] - [A142]<br>02: MUL [A141] × [A142] | 00 | | ✓ | 12B1h | 0 to 2 | - | |
| A145 | Add frequency | 0.00 to 590.00 (Hz) | 0.00 | | ✓ | 12B3h (High)<br>12B4h (Low) | 0 to 59000 | 0.01 | 9-2-17 |
| A146 | Add frequency direction selection | 00: Frequency reference + [A145]<br>01: Frequency reference - [A145] | 00 | | ✓ | 12B5h | 0 to 1 | - | |
| A150 | EL-S-curve ratio at start of acceleration | 0 to 50 (%) | 10 | | × | 12B9h | 0 to 50 | 1 | 9-3-5 |
| A151 | EL-S-curve ratio at end of acceleration | 0 to 50 (%) | 10 | | × | 12BAh | 0 to 50 | 1 | |
| A152 | EL-S-curve ratio at start of deceleration | 0 to 50 (%) | 10 | | × | 12BBh | 0 to 50 | 1 | |
| A153 | EL-S-curve ratio at end of deceleration | 0 to 50 (%) | 10 | | × | 12BCh | 0 to 50 | 1 | |
| A154 | Deceleration stop frequency | 0.00 to 590.00 (Hz) | 0.00 | | ✓ | 12BDh (High)<br>12BEh (Low) | 0 to 59000 | 0.01 | 9-3-4 |
| A155 | Deceleration stop time | 0.0 to 60.0 (s) | 0.0 | | ✓ | 12BFh | 0 to 600 | 0.1 | |
| A156 | PID sleep start level | 0.00 to 590.00 (Hz) | 0.00 | | ✓ | 12C0h (High)<br>12C1h (Low) | 0 to 59000 | 0.01 | 9-8-2 |
| A157 | PID sleep active time | 0.0 to 25.5 (s) | 0.0 | | ✓ | 12C2h | 0 to 255 | 0.1 | |
| A161 | POT start value*1 | 0.00 to 590.00 (Hz) | 0.00 | | ✓ | 12C6h (High)<br>12C7h (Low) | 0 to 59000 | 0.01 | 9-15-4 |
| A162 | POT end value*1 | 0.00 to 590.00 (Hz) | 0.00 | | ✓ | 12C8h (High)<br>12C9h (Low) | 0 to 59000 | 0.01 | |
| A163 | POT start ratio*1 | 0 to POT end ratio (%) | 0 | | ✓ | 12CAh | 0 to POT end ratio | 1 | |
| A164 | POT end ratio*1 | POT start ratio to 100 (%) | 100 | | ✓ | 12CBh | POT start ratio to 100 | 1 | |
| A165 | POT start selection*1 | 00: POT start value [A161]<br>01: 0 Hz | 01 | | ✓ | 12CCh | 0 to 1 | - | |

*1. In case that the optional remote operator with potentiometer (OPE-SR/OPE-SR mini) is connected.

## 18.2.4 b Parameter Group

| Code | Name | Data range | Initial value | Set value | Change during running | Modbus communication | | | Page |
|---|---|---|---|---|---|---|---|---|---|
| | | | | | | Register No. | Data Range | Resolution | |
| b001 | Restart mode selection after instantaneous power failure/ undervoltage error | 00: Trip<br>01: 0Hz start<br>02: Restart with frequency matching<br>03: Decelerate and stop with frequency matching and then trip<br>04: Active frequency matching restart | 00 | | ✓ | 1301h | 0 to 4 | - | 9-9-10 |
| b002 | Instantaneous power failure/ undervoltage allowed time | 0.3 to 25.0 (s) | 1.0 | | ✓ | 1302h | 3 to 250 | 0.1 | |
| b003 | Retry wait time after instantaneous power failure/ undervoltage error | 0.3 to 100.0 (s) | 1.0 | | ✓ | 1303h | 3 to 1000 | 0.1 | |
| b004 | Enable instantaneous power failure/ undervoltage error while in stop status | 00: Disable<br>01: Enable<br>02: Disable at Stop/Decel. Stop | 00 | | ✓ | 1304h | 0 to 2 | - | |
| b005 | Number of retries after instantaneous power failure/ undervoltage | 00: 16 times<br>01: Unlimited | 00 | | ✓ | 1305h | 0 to 1 | - | |
| b007 | Frequency matching minimum restart frequency | 0.00 to 590.00 (Hz) | 0.00 | | ✓ | 1307h (High)<br>1308h (Low) | 0 to 59000 | 0.01 | 9-7-3 |
| b008 | Restart mode selection after overvoltage/ overcurrent error | 00: Trip<br>01: 0Hz start<br>02: Restart with frequency matching<br>03: Decelerate and stop with frequency matching and then trip<br>04: Active frequency matching restart | 00 | | ✓ | 1309h | 0 to 4 | - | 9-9-14 |
| b010 | Number of retries after overvoltage/ overcurrent | 1 to 3 (times) | 3 | | ✓ | 130Bh | 1 to 3 | 1 | |
| b011 | Retry wait time after overvoltage/ overcurrent error | 0.3 to 100.0 (s) | 1.0 | | ✓ | 130Ch | 3 to 1000 | 0.1 | |
| b012 | Electronic thermal level, 1st-motor | (0.20 to 1.00) × Rated current (A) | Rated current | | ✓ | 130Dh | 200 to 1000 | 0.1 (%)*1 | 8-1-8 |
| b212 | Electronic thermal level, 2nd-motor | | Rated current | | ✓ | 230Ch | | 0.1 (%)*1 | |
| b013 | Electronic thermal characteristic selection, 1st-motor | 00: Reduced torque<br>01: Constant torque<br>02: Free setting | 01 | | ✓ | 130Eh | 0 to 2 | - | 8-1-9 |

*1. 100% of the set value means the rated current of the WJ-C1.

| Code | Name | Data range | Initial value | Set value | Change during running | Modbus communication | | | Page |
|---|---|---|---|---|---|---|---|---|---|
| | | | | | | Register No. | Data Range | Resolution | |
| b213 | Electronic thermal characteristic selection, 2nd-motor | | 01 | | ✓ | 230Dh | | - | |
| b015 | Free electronic thermal frequency-1 | 0 to Free electronic thermal frequency-2 (Hz) | 0 | | ✓ | 1310h | 0 to Free electronic thermal frequency-2 | 1 | 8-1-10 |
| b016 | Free electronic thermal current-1 | (0.00 to 1.00) × Rated current (A) | 0.00 | | ✓ | 1311h | 0 to 1000 | 0.1 (%)*1 | |
| b017 | Free electronic thermal frequency-2 | Free electron thermal frequency-1 to Free electron thermal frequency-3 (Hz) | 0 | | ✓ | 1312h | Free electron thermal frequency-1 to Free electron thermal frequency-3 | 1 | |
| b018 | Free electronic thermal current-2 | (0.00 to 1.00) × Rated current (A) | 0.00 | | ✓ | 1313h | 0 to 1000 | 0.1 (%)*1 | |
| b019 | Free electronic thermal frequency-3 | Free electronic thermal frequency-2 to 590 (Hz) | 0 | | ✓ | 1314h | Free electronic thermal frequency-2 to 590 | 1 | |
| b020 | Free electronic thermal current-3 | (0.00 to 1.00) × Rated current (A) | 0.00 | | ✓ | 1315h | 0 to 1000 | 0.1 (%)*1 | |
| b021 | Overload restriction 1 mode selection, 1st-motor | 00: Disable<br>01: Enable during accel. and constant speed<br>02: Constant speed only<br>03: Enable during accel. and constant speed (accel. during regeneration) | 01 | | ✓ | 1316h | 0 to 3 | - | 9-9-2 |
| b221 | Overload restriction 1 mode selection, 2nd-motor | | 01 | | ✓ | 2316h | | - | |
| b022 | Overload restriction 1 active level, 1st-motor | (0.20 to 2.00) × Rated current (A) (Normal duty (ND))<br>(0.20 to 1.50) × Rated current (A) (Light duty (LD)) | 1.50 (ND)<br>1.20 (LD)<br>×<br>Rated current | | ✓ | 1317h | 200 to 2000 (ND)<br>200 to 1500 (LD) | 0.1 (%)*1 | |
| b222 | Overload restriction 1 active level, 2nd-motor | | | | ✓ | 2317h | | 0.1 (%)*1 | |
| b023 | Overload restriction 1 action time, 1st-motor | 0.1 to 3000.0 (s) | 1.0 | | ✓ | 1318h | 1 to 30000 | 0.1 | |
| b223 | Overload restriction 1 action time, 2nd-motor | | 1.0 | | ✓ | 2318h | | 0.1 | |
| b024 | Overload restriction 2 mode selection | 00: Disable<br>01: Enable during accel. and constant speed<br>02: Constant speed only<br>03: Enable during accel. and constant speed (accel. during regeneration) | 1 | | ✓ | 1319h | 0 to 3 | - | |
| b025 | Overload restriction 2 active level | (0.20 to 2.00) × Rated current (A) (Normal duty (ND))<br>(0.20 to 1.50) × Rated current (A) (Light duty (LD)) | 1.50 (ND)<br>1.20 (LD)<br>×<br>Rated current | | ✓ | 131Ah | 200 to 2000 (ND)<br>200 to 1500 (LD) | 0.1 (%)*1 | |
| b026 | Overload restriction 2 action time | 0.1 to 3000.0 (s) | 1.0 | | ✓ | 131Bh | 1 to 30000 | 0.1 | 9-9-2 |

*1. 100% of the set value means the rated current of the WJ-C1.

| Code | Name | Data range | Initial value | Set value | Change during running | Modbus communication | | | Page |
|---|---|---|---|---|---|---|---|---|---|
| | | | | | | Register No. | Data Range | Resolution | |
| b027 | Overcurrent suppression enable | 00: Disable<br>01: Enable (without voltage reduction)<br>02: Enable (with voltage reduction) | 01/ 00/ 01*2 | | ✓ | 131Ch | 0 to 2 | - | 9-9-3 |
| b028 | Active frequency matching restart level | (0.20 to 2.00) × Rated current (A) (Normal duty (ND))<br>(0.20 to 1.50) × Rated current (A) (Light duty (LD)) | Rated current | | ✓ | 131Dh | 200 to 2000 (ND)<br>200 to 1500 (LD) | 0.1 (%)*1 | 9-7-4 |
| b029 | Active frequency matching restart constant (speed) | 0.1 to 3000.0 (s) | 0.50 | | ✓ | 131Eh | 1 to 30000 | 0.1 | |
| b030 | Active frequency matching restart speed selection | 00: Output frequency at shut down<br>01: Maximum frequency<br>02: Setting frequency | 00 | | ✓ | 131Fh | 0 to 2 | - | |
| b031 | Soft-Lock selection | 00: [SFT] terminal (locked except [b031])<br>01: [SFT] terminal (locked except [b031] and frequency settings)<br>02: Locked except [b031]<br>03: Locked except [b031] and frequency settings | 01 | | ✓ | 1320h | 0 to 3<br>* Writing 10 is invalid and no communication error. | - | 7-2-5 |
| b033 | Motor cable length code selection | 5 to 20 | 10 | | ✓ | 1322h | 5 to 20 | 1 | 8-1-14 |
| b034 | Accum. RUN time (RNT) / Accum. power-on time (ONT) | 0 to 65535 (× 10hr) | 0 | | ✓ | 1323h (High)<br>1324h (Low) | 0 to 65535 | 10hr | 9-11-9 |
| b035 | RUN direction restriction selection | 00: No restriction<br>01: Only forward<br>02: Only reverse | 00 | | × | 1325h | 0 to 2 | - | 9-4-2 |
| b036 | Reduced voltage start time | 0 (short time) to 255 (long time) | 2 | | ✓ | 1326h | 0 to 255 | - | 9-7-1 |
| b037 | Display restriction selection | 00: Full display<br>01: Function-specific display<br>02: User settings and [b037]<br>03: Data comparison display<br>05: Monitor only | 00 | | ✓ | 1327h | 0 to 5<br>* Writing 4 is invalid and no communication error. | - | 7-2-1 |
| b038 | Initial display selection | 000: Parameter that SET-key was pressed last<br>001 to 060: d001 to d060<br>201: F001<br>202: Monitor B display of WOP | 001 | | ✓ | 1328h | 000 to 202 | - | 7-2-8 |
| b039 | User-parameter automatic setting function enable | 00: Disable<br>01: Enable | 00 | | ✓ | 1329h | 0 to 1 | - | 7-2-9 |
| b040 | Torque limit selection | 00: 4 quadrant individual setting<br>01: Switched by terminal [TRQ1]/[TRQ2]<br>02: [Ai1] terminal input<br>03: Option | 00 | | ✓ | 132Ah | 0 to 3 | - | 9-6-2 |
| b041 | Torque limit 1 (Forward drive) | 0 to 200 (%) / no: Disable | 200 | | ✓ | 132Bh | 0 to 200/ 255(no) | 1 | |
| b042 | Torque limit 2 (Reverse regenerative) | 0 to 200 (%) / no: Disable | 200 | | ✓ | 132Ch | 0 to 200/ 255(no) | 1 | |
| b043 | Torque limit 3 (Reverse drive) | 0 to 200 (%) / no: Disable | 200 | | ✓ | 132Dh | 0 to 200/ 255(no) | 1 | |
| b044 | Torque limit 4 (Forward regenerative) | 0 to 200 (%) / no: Disable | 200 | | ✓ | 132Eh | 0 to 200/ 255(no) | 1 | 9-6-2 |

*1. 100% of the set value means the rated current of the WJ-C1.
*2. The default settings when initialize by setting 00/01/03 to "Initialize data selection [b085]".

| Code | Name | Data range | Initial value | Set value | Change during running | Modbus communication | | | Page |
|---|---|---|---|---|---|---|---|---|---|
| | | | | | | Register No. | Data Range | Resolution | |
| b045 | Torque limit LADSTOP selection | 00: Disable<br>01: Enable | 00 | | ✓ | 132Fh | 0 to 1 | - | |
| b046 | Direction reversal protection selection | 00: Disable<br>01: Enable | 01/<br>00/<br>01*2 | | ✓ | 1330h | 0 to 1 | - | 9-4-3 |
| b049 | Load type selection | 00: Normal duty<br>01: Light duty | 00 | | × | 1333h | 0 to 1 | - | 8-1-2 |
| b050 | Instantaneous power failure non-stop function, mode selection | 00: Disable<br>01: Deceleration-stop<br>02: Voltage controlled deceleration-stop (without recovery)<br>03: Voltage controlled deceleration-stop (with recovery) | 00 | | × | 1334h | 0 to 3 | - | 9-9-17 |
| b051 | Instantaneous power failure non-stop function, start voltage level | 200V class: 0.0 to 400.0 (VDC)<br>400V class: 0.0 to 800.0 (VDC) | 220.0<br>440.0 | | ✓ | 1335h | 0 to 4000<br>0 to 8000 | 0.1 | |
| b052 | Instantaneous power failure non-stop function, target voltage level | 200V class: 0.0 to 400.0 (VDC)<br>400V class: 0.0 to 800.0 (VDC) | 360.0<br>720.0 | | ✓ | 1336h | 0 to 4000<br>0 to 8000 | 0.1 | |
| b053 | Instantaneous power failure non-stop function, deceleration time | 0.01 to 3600.00 (s) | 1.00 | | ✓ | 1337h (High)<br>1338h (Low) | 1 to 360000 | 0.01 | |
| b054 | Instantaneous power failure non-stop function, start frequency decrement | 0.00 to 10.00 (Hz)<br>(100.00 (Hz))*3 | 0.00 | | ✓ | 1339h | 0 to 1000<br>(10000)*3 | 0.01 | |
| b060 | [Ai1] window comparator upper limit | 0 to 100 (%)<br>(Lower limit: ([b061] + [b062]) × 2) | 100 | | ✓ | 133Fh | 0 to 100<br>(Lower limit: ([b061] + [b062]) × 2) | 1 | 9-11-10 |
| b061 | [Ai1] window comparator lower limit | 0 to 100 (%)<br>(Upper limit: ([b060] - [b062]) × 2) | 0 | | ✓ | 1340h | 0 to 100<br>(Upper limit: ([b060] - [b062]) × 2) | 1 | |
| b062 | [Ai1] window comparator hysteresis width | 0 to 10 (%)<br>(Upper limit: ([b060] - [b061]) / 2) | 0 | | ✓ | 1341h | 0 to 100<br>(Upper limit: ([b060] - [b061]) / 2) | 1 | |
| b063 | [Ai2] window comparator upper limit | 0 to 100 (%)<br>(Lower limit: ([b064] + [b065]) × 2) | 100 | | ✓ | 1342h | 0 to 100<br>(Lower limit: ([b064] + [b065]) × 2) | 1 | |
| b064 | [Ai2] window comparator lower limit | 0 to 100 (%)<br>(Upper limit: ([b063] - [b065]) × 2) | 0 | | ✓ | 1343h | 0 to 100<br>(Upper limit: ([b063] - [b065]) × 2) | 1 | |
| b065 | [Ai2] window comparator hysteresis width | 0 to 10 (%)<br>(Upper limit: ([b063] - [b064]) / 2) | 0 | | ✓ | 1344h | 0 to 100<br>(Upper limit: ([b063] - [b064]) / 2) | 1 | |
| b070 | [Ai1] operation set level at disconnection or compare event | 0 to 100 (%) / no: Disable | no | | ✓ | 1349h | 0 to 100/<br>255(disabled) | 1 | 9-11-10 |

*2. The default settings when initialize by setting 00/01/03 to "Initialize data selection [b085]".
*3. When in WJ200 high frequency compatible mode.

| Code | Name | Data range | Initial value | Set value | Change during running | Modbus communication | | | Page |
|---|---|---|---|---|---|---|---|---|---|
| | | | | | | Register No. | Data Range | Resolution | |
| b071 | [Ai2] operation set level at disconnection or compare event | 0 to 100 (%) / no: Disable | no | | ✓ | 134Ah | 0 to 100/ 255(disabled) | 1 | |
| b075 | Ambient temperature | -10 to 50 (˚C) | 40 | | ✓ | 134Eh | -10 to 50 | 1 | 9-11-8 |
| b078 | Accumulated input power monitor clear | 00: Disable<br>01: Clear (return to 00 after clearing) | 00 | | ✓ | 1351h | 0 to 1 | - | 10-1-7 |
| b079 | Display gain for the accumulated input power monitor | 1 to 1000 | 1 | | ✓ | 1352h | 1 to 1000 | 1 | |
| b082 | Minimum frequency | 0.01 to 10.00 (Hz)<br>(100.00 (Hz))*3 | 0.50 | | ✓ | 1355h | 1 to 1000<br>(10000)*3 | 0.01 | 9-7-1 |
| b083 | Carrier frequency | 2.0 to 15.0 (kHz) (Normal duty (ND))<br>2.0 to 10.0 (kHz) (Light duty (LD))<br>(2.0 to 10.0 (kHz))*3<br>* With derating. | 2.0/<br>10.0/<br>2.0*2<br>(5.0)*3 | | ✓ | 1356h | 20 to 150 (ND)<br>20 to 100 (LD)<br>(20 to 100)*3 | 0.1 | 9-10-1 |
| b084 | Initialize mode selection | 00: Disable<br>01: Trip history<br>02: Parameter initialize<br>03: Trip history and parameter<br>04: Trip history, parameter and EzSQ | 00 | | × | 1357h | 0 to 4 | - | 7-2-3 |
| b085 | Initialize data selection | 00: Pattern 0<br>01: Pattern 1<br>03: Pattern 3 | 00/<br>01/<br>03*2 | | × | 1358h | 0,1,3 | - | |
| b086 | Frequency conversion gain | 0.01 to 99.99 | 1.00 | | ✓ | 1359h | 1 to 9999 | 0.01 | 10-1-1 |
| b087 | STOP/RESET-key enable | 00: Enable<br>01: Disable<br>02: Enable at only trip reset | 00 | | ✓ | 135Ah | 0 to 2 | - | 9-1-8 |
| b088 | Restart mode after FRS release | 00: 0Hz start<br>01: Restart with frequency matching<br>02: Active frequency matching restart | 00 | | ✓ | 135Bh | 0 to 2 | - | 9-7-9 |
| b089 | Automatic carrier reduction selection | 00: Disable<br>01: Enable: Current<br>02: Enable: Temperature | 01 | | ✓ | 135Ch | 0 to 2 | - | 9-10-2 |
| b090 | Dynamic brake use ratio | 0.0 to 100.0(%)<br>* Depends on b097 setting. | 0.0 | | ✓ | 135Dh | 0 to 1000 | 0.1 | 9-9-8 |
| b091 | STOP mode selection | 00: Deceleration stop<br>01: Free run stop | 00 | | ✓ | 135Eh | 0 to 1 | - | 9-7-10 |
| b092 | Cooling fan control method selection | 00: Always<br>01: While inverter operates (3 minutes after power on and run stop)<br>02: Depends on temperature | 01 | | ✓ | 135Fh | 0 to 2 | - | 9-10-6 |
| b093 | Accumulated cooling fan run time clear | 00: Disable<br>01: Clear | 00 | | ✓ | 1360h | 0 to 1 | - | 9-11-8 |
| b094 | Initialize target selection | 00: All parameters<br>01: All parameters except terminal and communication configuration<br>02: Parameters registered in [U***]<br>03: All parameters except parameters registered in [U***] and [b037] | 00 | | × | 1361h | 0 to 3 | - | 7-2-3 |
| b095 | Dynamic brake activation selection | 00: Disable<br>01: Enable only while running<br>02: Enable always | 01/<br>00/<br>01*2 | | ✓ | 1362h | 0 to 2 | - | 9-9-8 |

*2. The default settings when initialize by setting 00/01/03 to "Initialize data selection [b085]".
*3. When in WJ200 high frequency compatible mode.

| Code | Name | Data range | Initial value | Set value | Change during running | Modbus communication | | | Page |
|---|---|---|---|---|---|---|---|---|---|
| | | | | | | Register No. | Data Range | Resolution | |
| b096 | Dynamic brake activation level | 200V class: 330 to 400 (VDC)<br>400V class: 660 to 800 (VDC) | 360<br>720 | | ✓ | 1363h | 330 to 400 (200V)<br>660 to 800 (400V) | 1 | |
| b097 | Dynamic brake resistor value | Minimum resistance to 600.0 (Ω) | Minimum connection resistance | | ✓ | 1364h | 1 to 6000 | 0.1 | |
| b098 | Detect ground fault selection | 00: Disable<br>01: Enable | 00 | | × | 1365h | 0 to 1 | - | 15-2-3 |
| b100 | Free-V/f frequency 1 | 0. to Free-V/f frequency 2 (Hz) | 0 | | × | 1367h | 0 to Free-V/f frequency 2 | 1 | 9-5-4 |
| b101 | Free-V/f voltage 1 | 0.0 to 800.0 (V) | 0.0 | | × | 1368h | 0 to 8000 | 0.1 | |
| b102 | Free-V/f frequency 2 | Free-V/f frequency 1 to Free-V/f frequency 3 (Hz) | 0 | | × | 1369h | Free-V/f frequency 1 to Free-V/f frequency 3 | 1 | |
| b103 | Free-V/f voltage 2 | 0.0 to 800.0 (V) | 0.0 | | × | 136Ah | 0 to 8000 | 0.1 | |
| b104 | Free-V/f frequency 3 | Free-V/f frequency 2 to Free-V/f frequency 4 (Hz) | 0 | | × | 136Bh | Free-V/f frequency 2 to Free-V/f frequency 4 | 1 | |
| b105 | Free-V/f voltage 3 | 0.0 to 800.0 (V) | 0.0 | | × | 136Ch | 0 to 8000 | 0.1 | |
| b106 | Free-V/f frequency 4 | Free-V/f frequency 3 to Free-V/f frequency 5 (Hz) | 0 | | × | 136Dh | Free-V/f frequency 3 to Free-V/f frequency 5 | 1 | |
| b107 | Free-V/f voltage 4 | 0.0 to 800.0 (V) | 0.0 | | × | 136Eh | 0 to 8000 | 0.1 | |
| b108 | Free-V/f frequency 5 | Free-V/f frequency 4 to Free-V/f frequency 6 (Hz) | 0 | | × | 136Fh | Free-V/f frequency 4 to Free-V/f frequency 6 | 1 | |
| b109 | Free-V/f voltage 5 | 0.0 to 800.0 (V) | 0.0 | | × | 1370h | 0 to 8000 | 0.1 | |
| b110 | Free-V/f frequency 6 | Free-V/f frequency 5 to Free-V/f frequency 7 (Hz) | 0 | | × | 1371h | Free-V/f frequency 5 to Free-V/f frequency 7 | 1 | |
| b111 | Free-V/f voltage 6 | 0.0 to 800.0 (V) | 0.0 | | × | 1372h | 0 to 8000 | 0.1 | |
| b112 | Free-V/f frequency 7 | Free-V/f frequency 6 to 590 (Hz) | 0 | | × | 1373h | Free-V/f frequency 6 to 590 | 1 | |
| b113 | Free-V/f voltage 7 | 0.0 to 800.0 (V) | 0.0 | | × | 1374h | 0 to 8000 | 0.1 | |
| b120 | Brake control enable | 00: Disable<br>01: Enable<br>Positioning enabled (interlocked): with DB<br>Positioning disabled: Normal brake control<br>02: Enabled<br>Positioning enabled (interlocked): Without DB<br>Positioning disabled: Normal brake control | 00 | | ✓ | 137Bh | 0 to 2 | - | 9-7-16 |
| b121 | Brake release wait time | 0.00 to 5.00 (s) | 0.00 | | ✓ | 137Ch | 0 to 500 | 0.01 | |
| b122 | Brake wait time for accel. | 0.00 to 5.00 (s) | 0.00 | | ✓ | 137Dh | 0 to 500 | 0.01 | |
| b123 | Brake wait time for stopping | 0.00 to 5.00 (s) | 0.00 | | ✓ | 137Eh | 0 to 500 | 0.01 | |
| b124 | Brake confirmation signal wait time | 0.00 to 5.00 (s) | 0.00 | | ✓ | 137Fh | 0 to 500 | 0.01 | |
| b125 | Brake release frequency | 0.00 to 590.00 (Hz) | 0.00 | | ✓ | 1380h | 0 to 59000 | 0.01 | |
| b126 | Brake release current | (0.00 to 2.00) × Rated current (A) | Rated current | | ✓ | 1381h | 0 to 2000 | 0.1 (%)*1 | |
| b127 | Braking frequency | 0.00 to 590.00 (Hz) | 0.00 | | ✓ | 1382h | 0 to 59000 | 0.01 | |
| b130 | Overvoltage suppression enable | 00: Disable<br>01: Constant DC bus voltage control<br>02: Enable acceleration | 00 | | ✓ | 1385h | 0 to 2 | - | 9-9-4 |

*1. 100% of the set value means the rated current of the WJ-C1.

| Code | Name | Data range | Initial value | Set value | Change during running | Modbus communication | | | Page |
|---|---|---|---|---|---|---|---|---|---|
| | | | | | | Register No. | Data Range | Resolution | |
| b131 | Overvoltage suppression active level | 200V class: 330 to 400 (VDC)<br>400V class: 660 to 800 (VDC) | 380/<br>760 | | ✓ | 1386h | 330 to 400 (200V)<br>660 to 800 (400V) | 1 | |
| b132 | Overvoltage suppression active time | 0.10 to 30.00 (s) | 1.00 | | ✓ | 1387h | 10 to 3000 | 0.01 | |
| b133 | Constant DC bus voltage control P gain | 0.00 to 5.00 | 0.20 | | ✓ | 1388h | 0 to 500 | 0.01 | 9-9-4<br>9-9-17 |
| b134 | Constant DC bus voltage control I gain | 0.0 to 150.0 (s) | 1.0 | | ✓ | 1389h | 0 to 1500 | 0.1 | |
| b145 | STO input mode selection | 00: No trip (only shut down by hardware)<br>01: [E37] trip<br>02: [E98] trip, display [-S--]<br>03 (04): Display [-S--] (03 and 04 are the same in terms of function.)<br>05: Display [-S--]/[-F**]<br>06: Display [-S--]/[-F**] | 00 | | ✓ | 1394h | 0 to 1 | - | 14-1-4 |
| b146 | STO release delay allowed time | 0.00 to 2.00 (s) | 0.00 | | ✓ | 1395h | 0 to 200 | 0.01 | |
| b147 | STO special indication cancel selection | 00: Not cancel special indication<br>01: Cancel special indication | 00/<br>01/<br>00*2 | | ✓ | 13D0h | 0 to 1 | - | |
| b148 | STO special indication re-display time | 1 to 30 (s) | 30 | | ✓ | 13D1h | 1 to 30 | 1 | |
| b150 | Display while ext. operator connected | 001 to 060 (compatible with d001 to d060) | 001 | | ✓ | 1399h | 1 to 60h (BCD) | - | 7-2-11 |
| b160 | Dual monitor parameter 1 | 001 to 030 (compatible with d001 to d030) | 001 | | ✓ | 13A3h | 1 to 30h (BCD) | - | 10-3-6 |
| b161 | Dual monitor parameter 2 | 001 to 030 (compatible with d001 to d030) | 002 | | ✓ | 13A4h | 1 to 30h (BCD) | - | |
| b163 | Enable frequency changes through monitor display | 00: Disable<br>01: Enable (frequency setting can be changed in [d001]/[d007] | 00 | | ✓ | 13A6h | 0 to 1 | - | 9-2-22 |
| b164 | Enable auto-return to the initial display | 00: Disable<br>01: Enable | 00 | | ✓ | 13A7h | 0 to 1 | - | 7-2-8 |
| b165 | Action selection at ext. operator disconnection | 00: Trip<br>01: Trip after deceleration stop<br>02: Ignore<br>03: Free run<br>04: Deceleration stop | 02 | | ✓ | 13A8h | 0 to 4 | - | 7-2-11 |
| b166 | Data R/W selection | 00: Enable R/W<br>01: Disable R/W | 00 | | ✓ | 13A9h | 0 to 1 | - | |
| b171 | Inverter mode selection | 00: Disable<br>01: IM mode<br>02: (WJ200 high frequency compatible mode)*3<br>03: PM mode | 00 | | × | 13AEh | 0 to 3 | - | 8-1-15 |
| b180 | Execute initialization and mode selection | 00: Disable<br>01: Execute initialization and mode selection | 00 | | × | 13B7h | 0 to 1 | - | 7-2-3<br>8-1-15 |
| b190 | Password setting for display restriction selection [b037] | 0000(Password disable),<br>0001 to FFFF (Password enable) | 0000 | | × | Not disclosed | Not accessible | - | 7-2-6 |

*2. The default settings when initialize by setting 00/01/03 to "Initialize data selection [b085]".
*3. When in WJ200 high frequency compatible mode.

| Code | Name | Data range | Initial value | Set value | Change during running | Modbus communication | | | Page |
|---|---|---|---|---|---|---|---|---|---|
| | | | | | | Register No. | Data Range | Resolution | |
| b191 | Password authentication for display restriction selection [b037] | 0000 to FFFF | 0000 | | × | Not disclosed | Not accessible | - | 7-2-6 |
| b192 | Password setting for Soft-Lock selection [b031] | 0000(Password disable), 0001 to FFFF (Password enable) | 0000 | | × | Not disclosed | Not accessible | - | |
| b193 | Password authentication for Soft-Lock selection [b031] | 0000 to FFFF | 0000 | | × | Not disclosed | Not accessible | - | |
| b910 | Electronic thermal decrease function enable | 00: Disable<br>01: Enable (Fixed subtraction rate)<br>02: Enable ([b911] subtraction rate)<br>03: Enable ([b912] time constant subtraction) | 00/ 03/ 00*2 | | ✓ | 13C6h | 0 to 3 | - | 8-1-8<br>8-1-11 |
| b911 | Electronic thermal decreasing time | 0.10 to 100000.00 (s)*4 | 600.00 | | ✓ | 13C7h (High)<br>13C8h (Low) | 10 to 10000000 | 0.01 | |
| b912 | Electronic thermal decreasing time constant | 0.10 to 100000.00 (s)*4 | 120.00 | | ✓ | 13C9h (High)<br>13CAh (Low) | 10 to 10000000 | 0.01 | |
| b913 | Electronic thermal accumulation gain | 1.0 to 200.0 (%)*4 | 100.0 | | ✓ | 13CBh | 10 to 2000 | 0.1 | |
| b914 | Store electronic thermal counter at power-off | 00: Disable<br>01: Enable | 01 | | ✓ | 13CCh | 0 to 1 | - | 8-1-12 |

*2. The default settings when initialize by setting 00/01/03 to "Initialize data selection [b085]".
*4. Note that if the setting is less than the initial value, the motor may burn out easily due to the slow protection.

## 18.2.5 C Parameter Group

| Code | Name | Data range | Initial value | Set value | Change during running | Modbus communication | | | Page |
|---|---|---|---|---|---|---|---|---|---|
| | | | | | | Register No. | Data Range | Resolution | |
| C001 | Input terminal [1] function | See "18.2.6 List of Intelligent Input Terminal Functions" | [FW] | | ✓ | 1401h | 0 to 91 / 255(no) | - | 9-15-1 |
| C002 | Input terminal [2] function | | [RV] | | ✓ | 1402h | | - | |
| C003 | Input terminal [3] function | | [CF1]/ [EXT]/ [CF1]*1 | | ✓ | 1403h | | - | |
| C004 | Input terminal [4] function | | [CF2]/ [RS]/ [CF2]*1 | | ✓ | 1404h | | - | |
| C005 | Input terminal [5] function | | [2CH]/ [CF1]/ [2CH]*1 | | ✓ | 1405h | | - | |
| C006 | Input terminal [6] function | | [RS]/ [CF2]/ [RS]*1 | | ✓ | 1406h | | - | |
| C007 | Input terminal [7] function | | [USP]/ [JG]/ [USP]*1 | | ✓ | 1407h | | - | |
| C011 | Input terminal [1] active state | 00: NO: Normally Open<br>01: NC: Normally Closed | 00 | | ✓ | 140Bh | 0 to 1 | - | |
| C012 | Input terminal [2] active state | | 00 | | ✓ | 140Ch | | - | |
| C013 | Input terminal [3] active state | | 00 | | ✓ | 140Dh | | - | |
| C014 | Input terminal [4] active state | | 00 | | ✓ | 140Eh | | - | |
| C015 | Input terminal [5] active state | | 00 | | ✓ | 140Fh | | - | |
| C016 | Input terminal [6] active state | | 00 | | ✓ | 1410h | | - | |
| C017 | Input terminal [7] active state | | 00 | | ✓ | 1411h | | - | |
| C021 | Output terminal [11] function | See "18.2.7 List of Intelligent Output Terminal Functions" | [FA1]/ [RUN]/ [FA1]*1 | | ✓ | 1415h | 0 to 64 / 255(no) | - | 9-16-1 |
| C022 | Output terminal [12] function | | [RUN]/ [FA1]/ [RUN]*1 | | ✓ | 1416h | | - | |
| C026 | Output terminal [AL] function | | [AL] | | ✓ | 141Ah | | - | |
| C027 | [Ao2] Output monitor selection (PWM/ Pulse output) | 00: Output frequency<br>01: Output current<br>02: Output torque (Sensorless vector control)<br>03: Digital output frequency<br>04: Output voltage<br>05: Input power<br>06: Electronic thermal load ratio<br>07: LAD frequency<br>08: Digital current monitor<br>10: Cooling fin temperature<br>12: EzSQ general-purpose analog output YA0<br>15: Pulse input monitor<br>16: Option | 07 | | ✓ | 141Bh | 0 to 8, 10, 12, 15, 16 | - | 9-16-5 |

*1. The default settings when initialize by setting 00/01/03 to "Initialize data selection [b085]".

| Code | Name | Data range | Initial value | Set value | Change during running | Modbus communication | | | Page |
|---|---|---|---|---|---|---|---|---|---|
| | | | | | | Register No. | Data Range | Resolution | |
| C028 | [Ao1] Output monitor selection (Analog output monitor) | 00: Output frequency<br>01: Output current<br>02: Output Torque (Sensorless vector control)<br>04: Output voltage<br>05: Input power<br>06: Electronic thermal load ratio<br>07: LAD frequency<br>10: Cooling fin temperature<br>11: Output torque (signed) (Sensorless vector control)<br>13: EzSQ General-purpose analog output YA1<br>16: Option | 07 | | ✓ | 141Ch | 0 to 2, 4 to 7, 10,<br>11, 13, 16 | - | 9-16-7 |
| C030 | [Ao2] Output reference value (at digital output current monitor) | (0.20 to 2.00) × Rated current (A)<br>(When [C027] is set to "Digital current monitor", set the current to be output at 1440Hz.) | Rated current | | ✓ | 141Eh | 200 to 2000 (ND)<br>200 to 1500 (LD) | 0.1 (%)*2 | 9-16-6 |
| C031 | Output terminal [11] active state | 00: NO: Normally Open<br>01: NC: Normally Closed | 00 | | ✓ | 141Fh | 0 to 1 | - | 9-16-1 |
| C032 | Output terminal [12] active state | | 00 | | ✓ | 1420h | | - | |
| C036 | Output terminal [AL] active state | | 01 | | ✓ | 1424h | | - | |
| C038 | Low current signal output mode selection | 00: Enable during running<br>01: Enable only during constant speed | 01 | | ✓ | 1426h | 0 to 1 | - | 9-11-4 |
| C039 | Low current detection level | (0.00 to 2.00) × Rated current (A) | Rated current | | ✓ | 1427h | 0 to 2000 | 0.1 (%)*2 | |
| C040 | Overload signal output mode selection | 00: Enable during running<br>01: Enable only during constant speed | 01 | | ✓ | 1428h | 0 to 1 | - | 9-11-3 |
| C041 | Overload warning level, 1st-motor | (0.0 to 2.00) × Rated current (A) | Rated current × 1.15 | | ✓ | 1429h | 0 to 2000 | 0.1 (%)*2 | |
| C241 | Overload warning level, 2nd-motor | | Rated current × 1.15 | | ✓ | 2429h | | 0.1 (%)*2 | |
| C042 | Arrival frequency during acceleration | 0.00 to 590.00 (Hz) | 0.00 | | ✓ | 142Ah (High)<br>142Bh (Low) | 0 to 59000 | 0.01 | 9-13-2<br>9-13-3 |
| C043 | Arrival frequency during deceleration | 0.00 to 590.00 (Hz) | 0.00 | | ✓ | 142Ch (High)<br>142Dh (Low) | 0 to 59000 | 0.01 | |
| C044 | PID over deviation level | 0.0 to 100.0 (%) | 3.0 | | ✓ | 142Eh | 0 to 1000 | 0.1 | 9-8-2 |
| C045 | Arrival frequency 2 during acceleration | 0.00 to 590.00 (Hz) | 0.00 | | ✓ | 142Fh (High)<br>1430h (Low) | 0 to 59000 | 0.01 | 9-13-2<br>9-13-3 |
| C046 | Arrival frequency 2 during deceleration | 0.00 to 590.00 (Hz) | 0.00 | | ✓ | 1431h (High)<br>1432h (Low) | 0 to 59000 | 0.01 | |
| C047 | Pulse input/ monitor output scale convert gain | 0.01 to 99.99 | 1.00 | | ✓ | 1433h | 1 to 9999 | - | 9-16-6 |
| C052 | Turn-off level for the PID feedback compare signal | 0.0 to 100.0 (%) | 100.0 | | ✓ | 1438h | 0 to 1000 | 0.1 | 9-8-2 |
| C053 | Turn-on level for the PID feedback compare signal | 0.0 to 100.0 (%) | 0.0 | | ✓ | 1439h | 0 to 1000 | 0.1 | |
| C054 | Over/ Under-torque selection | 00: Over-torque<br>01: Under-torque | 00 | | ✓ | 143Ah | 0 to 1 | - | 9-6-4 |

*2. 100% of the set value means the rated current of the WJ-C1.

| Code | Name | Data range | Initial value | Set value | Change during running | Modbus communication | | | Page |
|---|---|---|---|---|---|---|---|---|---|
| | | | | | | Register No. | Data Range | Resolution | |
| C055 | Over/ Under-torque level (Forward drive) | 0 to 200 (%) | 100 | | ✓ | 143Bh | 0 to 200 | 1 | 9-6-4 |
| C056 | Over/ Under-torque level (Reverse regenerative) | 0 to 200 (%) | 100 | | ✓ | 143Ch | 0 to 200 | 1 | |
| C057 | Over/ Under-torque level (Reverse drive) | 0 to 200 (%) | 100 | | ✓ | 143Dh | 0 to 200 | 1 | |
| C058 | Over/ Under-torque level (Forward regenerative) | 0 to 200 (%) | 100 | | ✓ | 143Eh | 0 to 200 | 1 | |
| C059 | Over/ Under-torque output signal mode selection | 00: Enable during running<br>01: Enable only during constant speed | 01 | | ✓ | 143Fh | 0 to 1 | - | |
| C061 | Electronic thermal warning level (Motor) | 0 to 100 (%) | 90 | | ✓ | 1441h | 0 to 100 | 1 | 9-11-5 |
| C063 | Zero speed detection level | 0.00 to 100.00 (Hz) | 0.00 | | ✓ | 1443h | 0 to 10000 | 0.01 | 9-13-4 |
| C064 | Cooling fin overheat warning level | 0 to 110 (˚C) | 100 | | ✓ | 1444h | 0 to 110 | 1 | 9-11-6 |
| C071 | RS485 communication baud rate selection | 03: 2400bps<br>04: 4800bps<br>05: 9600bps<br>06: 19.2kbps<br>07: 38.4kbps<br>08: 57.6kbps<br>09: 76.8kbps<br>10: 115.2kbps | 05 | | ✓ | 144Bh | 3 to 10 | - | 11-1-1 |
| C072 | RS485 communication node address | 1 to 247 | 1 | | ✓ | 144Ch | 1 to 247 | 1 | |
| C074 | RS485 communication parity selection | 00: No parity<br>01: Even parity<br>02: Odd parity | 00 | | ✓ | 144Eh | 0 to 2 | - | |
| C075 | RS485 communication stop bit selection | 01: 1bit<br>02: 2bit | 01 | | ✓ | 144Fh | 1 to 2 | - | |
| C076 | RS485 communication error selection | 00: Trip<br>01: Trip after deceleration stop<br>02: Ignore<br>03: Free run stop<br>04: Deceleration stop | 02 | | ✓ | 1450h | 0 to 4 | - | |
| C077 | RS485 communication timeout | 0.00: Disabled<br>0.01 to 99.99 (s) | 0.00 | | ✓ | 1451h | 0 to 9999 | 0.01 | |
| C078 | RS485 communication wait time | 0 to 1000 (ms) | 0 | | ✓ | 1452h | 0 to 1000 | 1 | |
| C081 | [Ai1] Input gain adjustment | 0.0 to 200.0 (%) | 100 | | ✓ | 1455h | 0 to 2000 | 0.1 | 9-15-4 |
| C082 | [Ai2] Input gain adjustment | 0.0 to 200.0 (%) | 100 | | ✓ | 1456h | 0 to 2000 | 0.1 | |
| C085 | Thermistor gain adjustment | 0.0 to 200.0 (%) | 100 | | ✓ | 1459h | 0 to 2000 | 0.1 | 9-10-7 |
| C091 | Debug mode selection | For factory adjustment<br>(Do not change from 00) | 00 | | - | - | - | - | - |
| C096 | RS485 communication mode selection | 01: Modbus-RTU<br>02: EzCOM<br>03: EzCOM Administrator | 00 | | ✓ | 1464h | 0 to 2 | - | 11-1-1<br>11-4-2 |
| C098 | EzCOM start node No. | 1 to 8 | 1 | | × | 1466h | 1 to 8 | 1 | 11-4-2 |
| C099 | EzCOM end node No. | 1 to 8 | 1 | | × | 1467h | 1 to 8 | 1 | |

| Code | Name | Data range | Initial value | Set value | Change during running | Modbus communication | | | Page |
|---|---|---|---|---|---|---|---|---|---|
| | | | | | | Register No. | Data Range | Resolution | |
| C100 | EzCOM start method selection | 00: [ECOM] terminal<br>01: Always communication | 00 | | × | 1468h | 0 to 1 | - | 11-4-2 |
| C101 | FUP/FDN data save enable | 00: Not save<br>01: Save | 00 | | ✓ | 1469h | 0 to 1 | - | 9-2-18 |
| C102 | Reset mode selection | 00: Reset at turn-ON<br>01: Reset at turn-OFF<br>02: Only enable in trip status (Trip release at turn-ON)<br>03: Only enable in trip status (Trip release at turn-ON, clear only trip memory) | 00 | | ✓ | 146Ah | 0 to 3 | - | 9-1-9 |
| C103 | Restart mode after RS release | 00: Restart from 0 Hz<br>01: Restart with frequency matching<br>02: Active frequency matching restart | 00 | | ✓ | 146Bh | 0 to 2 | - | 9-7-8 |
| C104 | FUP/FDN [UDC] terminal mode selection | 00: 0Hz<br>01: Stored data (stored by [C101]=01) | 00 | | ✓ | 146Ch | 0 to 1 | - | 9-2-18 |
| C105 | [Ao2] gain adjustment | 50 to 200 (%) | 100 | | ✓ | 146Dh | 50 to 200 | 1 | 9-16-6 |
| C106 | [Ao1] gain adjustment | 50 to 200 (%) | 100 | | ✓ | 146Eh | 50 to 200 | 1 | 9-16-8 |
| C109 | [Ao1] bias adjustment | 0 to 100 (%) | 0 | | ✓ | 1471h | 0 to 100 | 1 | |
| C111 | Overload warning level 2 | (0.00 to 2.00) × Rated current (A) | Rated current × 1.15 | | ✓ | 1473h | 0 to 2000 | 0.1 | 9-11-3 |
| C117 | JOG sensitivity | 1 to 24 | 1 | | × | 1479h | 1 to 24 | 1 | 7-1-6 |
| C118 | JOG carry sensitivity | 1 to 100 | 20 | | × | 147Ah | 1 to 100 | 1 | |
| C130 | Output terminal [11] on-delay time | 0.0 to 100.0 (s) | 0.0 | | ✓ | 1486h | 0 to 1000 | 0.1 | 9-16-4 |
| C131 | Output terminal [11] off-delay time | 0.0 to 100.0 (s) | 0.0 | | ✓ | 1487h | 0 to 1000 | 0.1 | |
| C132 | Output terminal [12] on-delay time | 0.0 to 100.0 (s) | 0.0 | | ✓ | 1488h | 0 to 1000 | 0.1 | |
| C133 | Output terminal [12] off-delay time | 0.0 to 100.0 (s) | 0.0 | | ✓ | 1489h | 0 to 1000 | 0.1 | |
| C140 | Output terminal [AL] on-delay time | 0.0 to 100.0 (s) | 0.0 | | ✓ | 1490h | 0 to 1000 | 0.1 | |
| C141 | Output terminal [AL] off-delay time | 0.0 to 100.0 (s) | 0.0 | | ✓ | 1491h | 0 to 1000 | 0.1 | |
| C142 | LOG1 operand-1 selection | Same as [C021] (Excluding [LOG1] to [LOG3], [OPO], and no) | 00 | | ✓ | 1492h | Same as [C021] (Excluding 33 to 35, 63,255) | - | 9-13-5 |
| C143 | LOG1 operand-2 selection | | 00 | | ✓ | 1493h | | - | |
| C144 | LOG1 logical calculation selection | 00: AND<br>01: OR<br>02: XOR | 00 | | ✓ | 1494h | 0 to 2 | - | |
| C145 | LOG2 operand-1 selection | Same as [C021] (Excluding [LOG1] to [LOG3], [OPO], and no) | 00 | | ✓ | 1495h | Same as [C021] (Excluding 33 to 35, 63,255) | - | |
| C146 | LOG2 operand-2 selection | | 00 | | ✓ | 1496h | | - | |
| C147 | LOG2 logical calculation selection | 00: AND<br>01: OR<br>02: XOR | 00 | | ✓ | 1497h | 0 to 2 | - | |
| C148 | LOG3 operand-1 selection | Same as [C021] (Excluding [LOG1] to [LOG3], [OPO], and no) | 00 | | ✓ | 1498h | Same as [C021] (Excluding 33 to 35, 63,255) | - | |
| C149 | LOG3 operand-2 selection | | 00 | | ✓ | 1499h | | - | |
| C150 | LOG3 logical calculation selection | 00: AND<br>01: OR<br>02: XOR | 00 | | ✓ | 149Ah | 0 to 2 | - | |
| C160 | Input terminal [1] response time | 0 to 200 (× 2ms) | 1 | | ✓ | 14A4h | 0 to 200 | 2 | 9-15-3 |
| C161 | Input terminal [2] response time | 0 to 200 (× 2ms) | 1 | | ✓ | 14A5h | 0 to 200 | 2 | |
| C162 | Input terminal [3] response time | 0 to 200 (× 2ms) | 1 | | ✓ | 14A6h | 0 to 200 | 2 | |

| Code | Name | Data range | Initial value | Set value | Change during running | Modbus communication | | | Page |
|---|---|---|---|---|---|---|---|---|---|
| | | | | | | Register No. | Data Range | Resolution | |
| C163 | Input terminal [4] response time | 0 to 200 (× 2ms) | 1 | | ✓ | 14A7h | 0 to 200 | 2 | 9-15-3 |
| C164 | Input terminal [5] response time | 0 to 200 (× 2ms) | 1 | | ✓ | 14A8h | 0 to 200 | 2 | |
| C165 | Input terminal [6] response time | 0 to 200 (× 2ms) | 1 | | ✓ | 14A9h | 0 to 200 | 2 | |
| C166 | Input terminal [7] response time | 0 to 200 (× 2ms) | 1 | | ✓ | 14AAh | 0 to 200 | 2 | |
| C169 | Multistage input determination time | 0 to 200 (× 10ms) | 0 | | ✓ | 14ADh | 0 to 200 | 10 | 9-2-7 |
| C900 | IRDY action selection*3 | 00: Before WJ200 Ver. 3.0<br>01: WJ200 Ver. 3.0 or later | 01 | | ✓ | 14CCh | 0 to 1 | - | - |
| C901 | Overload signal judgement cycle selection*3 | 00: 40 msec<br>01: 2 msec | 00 | | ✓ | 14F0h | 0 to 1 | - | - |
| C902 | Overload signal filter time constant | 0 to 9999 (ms) | 300 | | ✓ | 14F1h | 0 to 9999 | 1 | 9-11-3<br>9-11-4 |
| C903 | Overload signal hysteresis*3 | 00.00 to 50.00 (%) | 10.00 | | ✓ | 14F2h | 0000 to 5000 | 0.01 | - |

*3. This parameter is a dummy parameter. User settings are disabled. Data can be read and written by Modbus communication, etc.

## 18.2.6 List of Intelligent Input Terminal Functions

| Function Number | Symbol | Function name | Page |
|---|---|---|---|
| 00 | FW | Forward rotation | 9-1-3 |
| 01 | RV | Reverse rotation | |
| 02 | CF1 | Multi-speed selection 1 | 9-2-7 |
| 03 | CF2 | Multi-speed selection 2 | |
| 04 | CF3 | Multi-speed selection 3 | |
| 05 | CF4 | Multi-speed selection 4 | |
| 06 | JG | Jogging | 9-2-10 |
| 07 | DB | External DC braking | 9-7-11 |
| 08 | SET | 2nd-motor control | 9-7-18 |
| 09 | 2CH | 2-stage Acceleration/Deceleration | 9-3-3 |
| 11 | FRS | Free run stop | 9-7-9<br>9-7-10 |
| 12 | EXT | External fault | 9-10-3 |
| 13 | USP | Unattended start protection | 9-10-4 |
| 14 | CS | Commercial power supply change | 9-7-15 |
| 15 | SFT | Soft-Lock | 7-2-5 |
| 16 | AT | Analog input switching | 9-2-4 |
| 18 | RS | Reset | 9-1-9<br>9-7-8 |
| 19 | PTC | External thermistor<br>Can be assigned only to [C005]. | 5-4-4<br>9-10-7 |
| 20 | STA | 3-wire Start | 9-1-4 |
| 21 | STP | 3-wire Stop | |
| 22 | F/R | 3-wire Forward/Reverse | |
| 23 | PID | Disable PID | 9-8-2 |
| 24 | PIDC | PID integration reset | |
| 27 | FUP | Remote control Speed-UP function | 9-2-18 |
| 28 | FDN | Remote control Speed-DOWN function | |
| 29 | UDC | Remote control Speed data clearing | |
| 31 | F-OP | Force operation | 9-1-7<br>9-2-21 |
| 32 | SF1 | Multi-speed Bit-1 | 9-2-7 |
| 33 | SF2 | Multi-speed Bit-2 | |
| 34 | SF3 | Multi-speed Bit-3 | |
| 35 | SF4 | Multi-speed Bit-4 | |
| 36 | SF5 | Multi-speed Bit-5 | |
| 37 | SF6 | Multi-speed Bit-6 | |
| 38 | SF7 | Multi-speed Bit-7 | |
| 39 | OLR | Overload restriction selection | 9-9-2 |

| Function Number | Symbol | Function name | Page |
|---|---|---|---|
| 40 | TL | Torque limit enable | 9-6-2 |
| 41 | TRQ1 | Torque limit selection bit 1 | |
| 42 | TRQ2 | Torque limit selection bit 2 | |
| 44 | BOK | Answer back from Brake | 9-7-16 |
| 46 | LAC | Acceleration/Deceleration cancellation | 9-3-7 |
| 47 | PCLR | Clearance of position deviation | 9-14-10 |
| 50 | ADD | Trigger for frequency addition | 9-2-17 |
| 51 | F-TM | Force terminal | 9-1-7<br>9-2-21 |
| 52 | ATR | Permission of torque control | 9-6-5 |
| 53 | KHC | Accumulated input power monitor clear | 10-1-7 |
| 56 | MI1 | General-purpose input 1 | 12-2-3 |
| 57 | MI2 | General-purpose input 2 | |
| 58 | MI3 | General-purpose input 3 | |
| 59 | MI4 | General-purpose input 4 | |
| 60 | MI5 | General-purpose input 5 | |
| 61 | MI6 | General-purpose input 6 | |
| 62 | MI7 | General-purpose input 7 | |
| 65 | AHD | Analog command holding | 9-2-20 |
| 66 | CP1 | Multistage position settings selection 1 | 9-14-2<br>9-14-5 |
| 67 | CP2 | Multistage position settings selection 2 | |
| 68 | CP3 | Multistage position settings selection 3 | |
| 69 | ORL | Limit signal of Homing function | 9-14-8 |
| 70 | ORG | Start signal of Homing function | |
| 73 | SPD | Speed/position switching | 9-14-12 |
| 81 | ECOM | EzCOM activation | 11-4-2 |
| 82 | PRG | Program RUN | 12-2-2 |
| 83 | HLD | Acceleration/Deceleration disable | 9-3-4 |
| 84 | REN | RUN enable | 9-4-4 |
| 85 | PLB | Pulse input B<br>Can be assigned only to [C007]. | 9-5-14 |
| 86 | DISP | Display lock | 7-2-10 |
| 91 | PSET | Position data presetting | 9-14-10 |
| no | no | No assignment | - |

## 18.2.7 List of Intelligent Output Terminal Functions

| Function Number | Symbol | Function name | Page |
|---|---|---|---|
| 00 | RUN | Running | 9-12-1 |
| 01 | FA1 | Constant-frequency reached | 9-13-1 |
| 02 | FA2 | Set frequency overreached | 9-13-2 |
| 03 | OL | Overload warning notice | 9-11-3 |
| 04 | OD | Over deviation for PID control | 9-8-2 |
| 05 | AL | Alarm | 9-11-1 |
| 06 | FA3 | Set frequency reached | 9-13-3 |
| 07 | OTQ | Over-torque/under-torque | 9-6-4 |
| 09 | UV | Undervoltage | 9-9-10 |
| 10 | TRQ | Torque limited | 9-6-2 |
| 11 | RNT | Accumulated RUN time over | 9-11-9 |
| 12 | ONT | Accumulated power-on time over | |
| 13 | THM | Electronic thermal alarm (Motor) | 9-11-5 |
| 19 | BRK | Brake release | 9-7-16<br>9-14-13 |
| 20 | BER | Brake error | |
| 21 | ZS | Zero speed detection | 9-13-4 |
| 22 | DSE | Speed over deviation | 9-5-8<br>9-5-17 |
| 23 | POK | Positioning completed | 9-14-2 |
| 24 | FA4 | Set frequency overreached 2 | 9-13-2 |
| 25 | FA5 | Set frequency reached 2 | 9-13-3 |
| 26 | OL2 | Overload warning notice 2 | 9-11-3 |
| 27 | Ai1Dc | Analog [Ai1] disconnection detection | 9-11-10 |
| 28 | Ai2Dc | Analog [Ai2] disconnection detection | |

| Function Number | Symbol | Function name | Page |
|---|---|---|---|
| 31 | FBV | PID feedback comparison | 9-8-2 |
| 32 | NDc | Communication line disconnection | 11-1-1 |
| 33 | LOG1 | Logical operation result 1 | 9-13-5 |
| 34 | LOG2 | Logical operation result 2 | |
| 35 | LOG3 | Logical operation result 3 | |
| 39 | WAC | Capacitor life warning | 9-11-7 |
| 40 | WAF | Cooling-fan life warning | 9-11-8 |
| 41 | FR | RUN command active | 9-12-3 |
| 42 | OHF | Cooling fin overheat warning | 9-11-6 |
| 43 | LOC | Low current signal | 9-11-4 |
| 44 | MO1 | General-purpose output 1 | 12-2-3 |
| 45 | MO2 | General-purpose output 2 | |
| 46 | MO3 | General-purpose output 3 | |
| 50 | IRDY | Inverter ready | 9-12-4 |
| 51 | FWR | Forward rotation | 9-12-2 |
| 52 | RVR | Reverse rotation | |
| 53 | MJA | Major failure | 9-11-2 |
| 54 | WCAi1 | Window comparator [Ai1] | 9-11-10 |
| 55 | WCAi2 | Window comparator [Ai2] | |
| 58 | FREF | Frequency reference by keypad | 9-2-3 |
| 59 | REF | RUN command by keypad | 9-1-2 |
| 60 | SETM | 2nd-motor control is selected | 9-7-18 |
| 62 | EDM | STO state monitor output | 14-1-3 |
| 63 | OPO*1 | Option output | - |
| 64 | FSC | STO input discrepancy | 14-1-4 |
| no | no | No assignment | - |

*1. Option output function (OPO) is for an extension function in the future and currently not functioning. Do not assign this function.

## 18.2.8 H Parameter Group

| Code | Name | Data range | Initial value | Set value | Change during running | Modbus communication | | | Page |
|---|---|---|---|---|---|---|---|---|---|
| | | | | | | Register No. | Data Range | Resolution | |
| H001 | Auto-tuning selection | 00: Disable<br>01: Enable without rotation<br>02: Enable with rotation | 00 | | × | 1501h | 0 to 2 | - | 8-3-1 |
| H002 | Async. Motor constant selection, 1st-motor | 00: Hitachi Standard<br>02: Auto-tuning Data | 00 | | × | 1502h | 0 to 2 | - | 8-1-14<br>8-3-1 |
| H202 | Async. Motor constant selection, 2nd-motor | | | | × | 2502h | | - | |
| H003 | Async. Motor capacity, 1st-motor | 0.1/ 0.2/ 0.4/ 0.55/ 0.75/ 1.1/ 1.5/ 2.2/ 3.0/ 3.7/ 4.0/ 5.5/ 7.5/ 11.0/ 15.0/ 18.5 (kW) | Maximum applicable motor capacity | | × | 1503h | 0 (0.1kW)<br>1 (0.2kW)<br>2 (0.4kW)<br>3 (0.55kW)<br>4 (0.75kW)<br>5 (1.1kW)<br>6 (1.5kW)<br>7 (2.2kW)<br>8 (3.0kW)<br>9 (3.7kW)<br>10 (4.0kW)<br>11 (5.5kW)<br>12 (7.5kW)<br>13 (11kW)<br>14 (15kW)<br>15 (18.5kW) | - | 8-1-5 |
| H203 | Async. Motor capacity, 2nd-motor | | | | × | 2503h | | - | |
| H004 | Async. Motor number of poles, 1st-motor | 2/ 4/ 6/ to / 46/ 48 (poles) | 4 | | × | 1504h | 0 (2 poles)<br>1 (4 poles)<br>2 (6 poles)<br>to<br>22 (46 poles)<br>23 (48 poles) | - | |
| H204 | Async. Motor number of poles, 2nd-motor | | | | × | 2504h | | - | |
| H005 | Async. Motor speed response, 1st-motor | 1 to 1000 (%) | 100 | | ✓ | 1506h | 1 to 1000 | 1 | 9-5-12 |
| H205 | Async. Motor speed response, 2nd-motor | | | | ✓ | 2506h | | 1 | |
| H006 | Async. Motor stabilization constant, 1st-motor | 0 to 255 | 100 | | ✓ | 1507h | 0 to 255 | 1 | 9-5-10 |
| H206 | Async. Motor stabilization constant, 2nd-motor | | | | ✓ | 2507h | | 1 | |
| H020 | Async. Motor constant R1, 1st-motor | 0.001 to 65.535 (Ω) | Depending on capacity | | × | 1516h | 1 to 65535 | 0.001 | 8-1-14<br>9-5-12 |
| H220 | Async. Motor constant R1, 2nd-motor | | | | × | 2516h | | 0.001 | |
| H021 | Async. Motor constant R2, 1st-motor | 0.001 to 65.535 (Ω) | Depending on capacity | | × | 1518h | 1 to 65535 | 0.001 | |
| H221 | Async. Motor constant R2, 2nd-motor | | | | × | 2518h | | 0.001 | |
| H022 | Async. Motor constant L, 1st-motor | 0.01 to 655.35 (mH) | Depending on capacity | | × | 151Ah | 1 to 65535 | 0.01 | |
| H222 | Async. Motor constant L, 2nd-motor | | | | × | 251Ah | | 0.01 | |

| Code | Name | Data range | Initial value | Set value | Change during running | Modbus communication | | | Page |
|---|---|---|---|---|---|---|---|---|---|
| | | | | | | Register No. | Data Range | Resolution | |
| H023 | Async. Motor constant I0, 1st-motor | 0.01 to 655.35 (A) | Depending on capacity | | × | 151Ch | 1 to 65535 | 0.01 | 8-1-14<br>9-5-12 |
| H223 | Async. Motor constant I0, 2nd-motor | | | | × | 251Ch | | 0.01 | |
| H024 | Async. Motor constant J, 1st-motor | 0.001 to 9999.000 (kgm$^2$) | Depending on capacity | | × | 151Dh (High)<br>151Eh (Low) | 1 to 9999000 | 0.001 | |
| H224 | Async. Motor constant J, 2nd-motor | | | | | 251Dh (High)<br>251Eh (Low) | | 0.001 | |
| H030 | Async. Motor constant R1, 1st-motor (Auto-tuning data) | 0.001 to 65.535 (Ω) | Depending on capacity | | × | 1525h | 1 to 65535 | 0.001 | 8-3-1<br>9-5-12 |
| H230 | Async. Motor constant R1, 2nd-motor (Auto-tuning data) | | Depending on capacity | | × | 2525h | | 0.001 | |
| H031 | Async. Motor constant R2, 1st-motor (Auto-tuning data) | 0.001 to 65.535 (Ω) | Depending on capacity | | × | 1527h | 1 to 65535 | 0.001 | |
| H231 | Async. Motor constant R2, 2nd-motor (Auto-tuning data) | | Depending on capacity | | × | 2527h | | 0.001 | |
| H032 | Async. Motor constant L, 1st-motor (Auto-tuning data) | 0.01 to 655.35 (mH) | Depending on capacity | | × | 1529h | 1 to 65535 | 0.01 | |
| H232 | Async. Motor constant L, 2nd-motor (Auto-tuning data) | | Depending on capacity | | × | 2529h | | 0.01 | |
| H033 | Async. Motor constant I0, 1st-motor (Auto-tuning data) | 0.01 to 655.35 (A) | Depending on capacity | | × | 152Bh | 1 to 65535 | 0.01 | |
| H233 | Async. Motor constant I0, 2nd-motor (Auto-tuning data) | | Depending on capacity | | × | 252Bh | | 0.01 | |
| H034 | Async. Motor constant J, 1st-motor (Auto-tuning data) | 0.001 to 9999.000 (kgm$^2$) | Depending on capacity | | × | 152Ch (High)<br>152Dh (Low) | 1 to 9999000 | 0.001 | |
| H234 | Async. Motor constant J, 2nd-motor (Auto-tuning data) | | Depending on capacity | | × | 252Ch (High)<br>252Dh (Low) | | 0.001 | |
| H050 | Slip compensation P-gain at V/f with encoder | 0.00 to 10.00 (times) | 0.20 | | ✓ | 153Dh | 0 to 1000 | 0.01 | 9-5-8 |
| H051 | Slip compensation I-gain at V/f with encoder | 0 to 1000 (s) | 2 | | ✓ | 153Eh | 0 to 1000 | 1 | |
| H102 to H134 | These parameters are SM/PMM related functions.<br>Contact your supplier or local Hitachi sales office for details. | | | | | - | - | - | - |

## 18.2.9 P Parameter Group

| Code | Name | Data range | Initial value | Set value | Change during running | Modbus communication | | | Page |
|---|---|---|---|---|---|---|---|---|---|
| | | | | | | Register No. | Data Range | Resolution | |
| P001 | Operation selection at an option error | 00: Trip<br>01: Continued operation | 00 | | ✓ | 1601h | 0 to 1 | - | 13-2-1 |
| P003 | Pulse input, target function selection | 00: Pulse input frequency command (including PID)<br>01: Speed feedback (enabled only when the 1st control is selected)<br>02: Extension input terminal for EzSQ | 00 | | × | 1603h | 0 to 2 | - | 9-2-13 |
| P004 | Pulse input mode selection | 00: Single phase pulse input<br>01: 90 degrees shift pulse<br>02: Disable (Do not set)<br>03: Forward and reverse command and pulse<br>* 02 has the same operation as 01. | 00 | | × | 1604h | 0 to 3 | - | 9-5-14 |
| P011 | Encoder constant | 32 to 1024 (pls) | 512 | | × | 160Bh | 32 to 1024 | 1 | |
| P012 | Simple positioning selection | 00: Simple positioning disabled<br>02: Simple positioning enabled | 00 | | × | 160Ch | 0, 2 | - | 9-5-14<br>9-14-1 |
| P014 | Position displacement at creep speed | 0.0 to 400.0 (%) | 125.0 | | × | 160Eh | 0 to 4000 | 0.1 | 9-14-2 |
| P015 | Creep speed | Minimum frequency to 10.0(Hz) (100.0(Hz))*1 | 5.00 | | ✓ | 160Fh | Minimum frequency to 1000 (10000)*1 | 0.01 | |
| P017 | Positioning completed range | 0 to 10000 (pls)<br>* Set by multiplying by 4. | 50 | | × | 1611h | 0 to 10000 | 1 | |
| P026 | Over-speed detection level | 0.0 to 150.0 (%) | 115.0 | | ✓ | 161Ah | 0 to 1500 | 0.1 | 9-5-8<br>9-5-17 |
| P027 | Speed deviation error detection level | 0.00 to 120.00 (Hz) | 10.00 | | ✓ | 161Bh | 0 to 12000 | 0.01 | |
| P031 | Acceleration/Deceleration time input source selection | 00: Keypad<br>03: EzSQ | 00 | | × | 161Fh | 0, 3 | - | 9-3-2 |
| P033 | Torque reference input source selection | 00: [Ai1] terminal<br>01: [Ai2] terminal<br>03: Parameter setting<br>06: Option | 00 | | × | 1621h | 0, 1, 3, 6 | - | 9-6-5 |
| P034 | Torque reference | 0 to 200 (%) | 0 | | ✓ | 1622h | 0 to 200 | 1 | |
| P036 | Torque bias input source selection | 00: None<br>01: Parameter setting<br>05: Option | 00 | | × | 1624h | 0, 1, 5 | - | 9-6-6 |
| P037 | Torque bias value | -200 to +200 (%) | 0 | | ✓ | 1625h | -200 to +200 | 1 | |
| P038 | Torque bias polarity selection | 00: According to sign<br>01: Depending on the operation direction | 00 | | × | 1626h | 0 to 1 | - | |
| P039 | Speed limit at torque control (Forward rotation) | 0.00 to 120.00 (Hz) | 0.00 | | ✓ | 1628h | 0 to 12000 | 0.01 | 9-6-5 |
| P040 | Speed limit at torque control (Reverse rotation) | 0.00 to 120.00 (Hz) | 0.00 | | ✓ | 162Ah | 0 to 12000 | 0.01 | |
| P041 | Switching time of speed control to torque control | 0 to 1000 (ms) | 0 | | × | 162Bh | 0 to 1000 | 1 | |
| P044 | Communication Watch Dog Timer | 0.00 to 99.99 (s) | 1.00 | | × | 162Eh | 0 to 9999 | 0.01 | 13-2-1 |

*1. When in WJ200 high frequency compatible mode.

| Code | Name | Data range | Initial value | Set value | Change during running | Modbus communication | | | Page |
|---|---|---|---|---|---|---|---|---|---|
| | | | | | | Register No. | Data Range | Resolution | |
| P045 | Operation selection at option communication timeout | 00: Trip<br>01: Trip after deceleration stop<br>02: Ignore<br>03: Free run stop<br>04: Deceleration stop | 00 | | × | 162Fh | 0 to 4 | - | 13-2-1 |
| P046 | DeviceNet assembly instance number | 0 to 20 | 1 | | × | 1630h | 0 to 20 | 1 | - |
| P048 | DeviceNet idle mode action selection | 00: Trip<br>01: Trip after deceleration stop<br>02: Ignore<br>03: Free run<br>04: Deceleration stop | 00 | | × | 1632h | 0 to 4 | - | - |
| P049 | Number of poles for rotation speed | 0 (disable),<br>2/ 4/ 6/ to / 46/ 48 (poles) | 0 | | × | 1633h | 0 (disable)<br>1 (2 poles)<br>2 (4 poles)<br>3 (6 poles)<br>to<br>23 (46 poles)<br>24 (48 poles) | - | - |
| P055 | Pulse frequency scale | 1.0 to 32.0 (kHz) | 25.0/<br>1.5/<br>25.0*2 | | ✓ | 1639h | 10 to 320 | 0.1 | 9-2-13 |
| P056 | Pulse frequency filter time constant | 0.01 to 2.00 (s) | 0.10 | | ✓ | 163Ah | 1 to 200 | 0.01 | |
| P057 | Pulse frequency bias value | -100 to +100 (%) | 0 | | ✓ | 163Bh | -100 to +100 | 1 | |
| P058 | Pulse upper frequency detection level | 0 to 100 (%) | 100 | | ✓ | 163Ch | 0 to 100 | 1 | |
| P059 | Pulse lower frequency detection level | 0.01 to 20.00 (%) | 1.00 | | ✓ | 163Dh | 1 to 2000 | 0.01 | |
| P060 | Position set-point 0 | Position control range (reverse) [P073] to Position control range (forward) [P072] (pls)<br>* Set by multiplying by 1. | 0 | | ✓ | 163Eh (High)<br>163Fh (Low) | Position control range (reverse) [P073] to Position control range (forward) [P072] | 1 | 9-14-2 |
| P061 | Position set-point 1 | | 0 | | ✓ | 1640h (High)<br>1641h (Low) | | 1 | |
| P062 | Position set-point 2 | | 0 | | ✓ | 1642h (High)<br>1643h (Low) | | 1 | |
| P063 | Position set-point 3 | | 0 | | ✓ | 1644h (High)<br>1645h (Low) | | 1 | |
| P064 | Position set-point 4 | | 0 | | ✓ | 1646h (High)<br>1647h (Low) | | 1 | |
| P065 | Position set-point 5 | | 0 | | ✓ | 1648h (High)<br>1649h (Low) | | 1 | |
| P066 | Position set-point 6 | | 0 | | ✓ | 164Ah (High)<br>164Bh (Low) | | 1 | |
| P067 | Position set-point 7 | | 0 | | ✓ | 164Ch (High)<br>164Dh (Low) | | 1 | |
| P068 | Homing mode selection | 00: Low-speed homing<br>01: High-speed homing | 00 | | ✓ | 164Eh | 0 to 1 | - | 9-14-8 |
| P069 | Homing direction selection | 00: Forward<br>01: Reverse | 01 | | ✓ | 164Fh | 0 to 1 | - | |
| P070 | Low-speed homing speed | 0.00 to 10.00 (Hz)<br>(100.00 (Hz))*1 | 5.00 | | ✓ | 1650h | 0 to 1000<br>(10000)*1 | 0.01 | |
| P071 | High-speed homing speed | 0.00 to Maximum frequency, 1st-motor (Hz) | 5.00 | | ✓ | 1651h | 0 to Maximum frequency, 1st-motor | 0.01 | |
| P072 | Position control range (forward) | 0 to +268435455 | +268435455 | | ✓ | 1652h (High)<br>1653h (Low) | 0 to +268435455 | 1 | 9-14-2 |
| P073 | Position control range (reverse) | -268435455 to 0 | -268435455 | | ✓ | 1654h (High)<br>1655h (Low) | -268435455 to 0 | 1 | |

*1. When in WJ200 high frequency compatible mode.
*2. The default settings when initialize by setting 00/01/03 to "Initialize data selection [b085]".

| Code | Name | Data range | Initial value | Set value | Change during running | Modbus communication | | | Page |
|---|---|---|---|---|---|---|---|---|---|
| | | | | | | Register No. | Data Range | Resolution | |
| P075 | Position control mode selection | 00: Limit<br>01: No limit | 00 | | × | 1657h | 0 to 1 | - | 9-14-2 |
| P077 | Encoder disconnection timeout | 0.0 to 10.0 (s) | 1.0 | | ✓ | 1659h | 0 to 100 | 0.1 | 15-2-6 |
| P080 | Positioning restart range | 0 to 10000 (pulse)<br>* Set by multiplying by 4. | 0 | | × | 165Ch | 0 to 10000 | 1 | 9-14-2 |
| P081 | Save current position at power off | 00: Disable<br>01: Enable | 00 | | ✓ | 165Dh | 0 to 1 | - | 9-14-11 |
| P082 | Current position at power off | Position control range (reverse) [P073] to Position control range (forward) [P072] (pls) | 0 | | ✓ | 165Eh (High)<br>165Fh (Low) | Position control range (reverse) [P073] to Position control range (forward) [P072] | 1 | |
| P083 | Pre-set position data | Position control range (reverse) [P073] to Position control range (forward) [P072] (pls) | 0 | | ✓ | 1660h (High)<br>1661h (Low) | Position control range (reverse) [P073] to Position control range (forward) [P072] | 1 | 9-14-10 |
| P100 | EzSQ user parameter U(00) | 0 to 65535 | 0 | | ✓ | 1666h | 0 to 65535 | 1 | 12-2-3 |
| P101 | EzSQ user parameter U(01) | 0 to 65535 | 0 | | ✓ | 1667h | 0 to 65535 | 1 | |
| P102 | EzSQ user parameter U(02) | 0 to 65535 | 0 | | ✓ | 1668h | 0 to 65535 | 1 | |
| P103 | EzSQ user parameter U(03) | 0 to 65535 | 0 | | ✓ | 1669h | 0 to 65535 | 1 | |
| P104 | EzSQ user parameter U(04) | 0 to 65535 | 0 | | ✓ | 166Ah | 0 to 65535 | 1 | |
| P105 | EzSQ user parameter U(05) | 0 to 65535 | 0 | | ✓ | 166Bh | 0 to 65535 | 1 | |
| P106 | EzSQ user parameter U(06) | 0 to 65535 | 0 | | ✓ | 166Ch | 0 to 65535 | 1 | |
| P107 | EzSQ user parameter U(07) | 0 to 65535 | 0 | | ✓ | 166Dh | 0 to 65535 | 1 | |
| P108 | EzSQ user parameter U(08) | 0 to 65535 | 0 | | ✓ | 166Eh | 0 to 65535 | 1 | |
| P109 | EzSQ user parameter U(09) | 0 to 65535 | 0 | | ✓ | 166Fh | 0 to 65535 | 1 | |
| P110 | EzSQ user parameter U(10) | 0 to 65535 | 0 | | ✓ | 1670h | 0 to 65535 | 1 | |
| P111 | EzSQ user parameter U(11) | 0 to 65535 | 0 | | ✓ | 1671h | 0 to 65535 | 1 | |
| P112 | EzSQ user parameter U(12) | 0 to 65535 | 0 | | ✓ | 1672h | 0 to 65535 | 1 | |
| P113 | EzSQ user parameter U(13) | 0 to 65535 | 0 | | ✓ | 1673h | 0 to 65535 | 1 | |
| P114 | EzSQ user parameter U(14) | 0 to 65535 | 0 | | ✓ | 1674h | 0 to 65535 | 1 | |
| P115 | EzSQ user parameter U(15) | 0 to 65535 | 0 | | ✓ | 1675h | 0 to 65535 | 1 | |
| P116 | EzSQ user parameter U(16) | 0 to 65535 | 0 | | ✓ | 1676h | 0 to 65535 | 1 | |
| P117 | EzSQ user parameter U(17) | 0 to 65535 | 0 | | ✓ | 1677h | 0 to 65535 | 1 | |
| P118 | EzSQ user parameter U(18) | 0 to 65535 | 0 | | ✓ | 1678h | 0 to 65535 | 1 | |
| P119 | EzSQ user parameter U(19) | 0 to 65535 | 0 | | ✓ | 1679h | 0 to 65535 | 1 | |
| P120 | EzSQ user parameter U(20) | 0 to 65535 | 0 | | ✓ | 167Ah | 0 to 65535 | 1 | |
| P121 | EzSQ user parameter U(21) | 0 to 65535 | 0 | | ✓ | 167Bh | 0 to 65535 | 1 | |
| P122 | EzSQ user parameter U(22) | 0 to 65535 | 0 | | ✓ | 167Ch | 0 to 65535 | 1 | |
| P123 | EzSQ user parameter U(23) | 0 to 65535 | 0 | | ✓ | 167Dh | 0 to 65535 | 1 | |
| P124 | EzSQ user parameter U(24) | 0 to 65535 | 0 | | ✓ | 167Eh | 0 to 65535 | 1 | |
| P125 | EzSQ user parameter U(25) | 0 to 65535 | 0 | | ✓ | 167Fh | 0 to 65535 | 1 | |

| Code | Name | Data range | Initial value | Set value | Change during running | Modbus communication | | | Page |
|---|---|---|---|---|---|---|---|---|---|
| | | | | | | Register No. | Data Range | Resolution | |
| P126 | EzSQ user parameter U(26) | 0 to 65535 | 0 | | ✓ | 1680h | 0 to 65535 | 1 | 12-2-3 |
| P127 | EzSQ user parameter U(27) | 0 to 65535 | 0 | | ✓ | 1681h | 0 to 65535 | 1 | |
| P128 | EzSQ user parameter U(28) | 0 to 65535 | 0 | | ✓ | 1682h | 0 to 65535 | 1 | |
| P129 | EzSQ user parameter U(29) | 0 to 65535 | 0 | | ✓ | 1683h | 0 to 65535 | 1 | |
| P130 | EzSQ user parameter U(30) | 0 to 65535 | 0 | | ✓ | 1684h | 0 to 65535 | 1 | |
| P131 | EzSQ user parameter U(31) | 0 to 65535 | 0 | | ✓ | 1685h | 0 to 65535 | 1 | |
| P140 | EzCOM number of data | 1 to 5 | 5 | | ✓ | 168Eh | 1 to 5 | 1 | 11-4-2 |
| P141 | EzCOM destination address 1 | 1 to 247 | 1 | | ✓ | 168Fh | 1 to 247 | 1 | |
| P142 | EzCOM destination register 1 | 0000h to FFFFh | 0000 | | ✓ | 1690h | 0000h to FFFFh | 1 | |
| P143 | EzCOM source register 1 | 0000h to FFFFh | 0000 | | ✓ | 1691h | 0000h to FFFFh | 1 | |
| P144 | EzCOM destination address 2 | 1 to 247 | 2 | | ✓ | 1692h | 1 to 247 | 1 | |
| P145 | EzCOM destination register 2 | 0000h to FFFFh | 0000 | | ✓ | 1693h | 0000h to FFFFh | 1 | |
| P146 | EzCOM source register 2 | 0000h to FFFFh | 0000 | | ✓ | 1694h | 0000h to FFFFh | 1 | |
| P147 | EzCOM destination address 3 | 1 to 247 | 3 | | ✓ | 1695h | 1 to 247 | 1 | |
| P148 | EzCOM destination register 3 | 0000h to FFFFh | 0000 | | ✓ | 1696h | 0000h to FFFFh | 1 | |
| P149 | EzCOM source register 3 | 0000h to FFFFh | 0000 | | ✓ | 1697h | 0000h to FFFFh | 1 | |
| P150 | EzCOM destination address 4 | 1 to 247 | 4 | | ✓ | 1698h | 1 to 247 | 1 | |
| P151 | EzCOM destination register 4 | 0000h to FFFFh | 0000 | | ✓ | 1699h | 0000h to FFFFh | 1 | |
| P152 | EzCOM source register 4 | 0000h to FFFFh | 0000 | | ✓ | 169Ah | 0000h to FFFFh | 1 | |
| P153 | EzCOM destination address 5 | 1 to 247 | 5 | | ✓ | 169Bh | 1 to 247 | 1 | |
| P154 | EzCOM destination register 5 | 0000h to FFFFh | 0000 | | ✓ | 169Ch | 0000h to FFFFh | 1 | |
| P155 | EzCOM source register 5 | 0000h to FFFFh | 0000 | | ✓ | 169Dh | 0000h to FFFFh | 1 | |
| P160 | Flexible command writing register 1 | 0000h to FFFFh | 0000 | | ✓ | 16A2h | 0000h to FFFFh | 1 | 13-2-2 |
| P161 | Flexible command writing register 2 | 0000h to FFFFh | 0000 | | ✓ | 16A3h | 0000h to FFFFh | 1 | |
| P162 | Flexible command writing register 3 | 0000h to FFFFh | 0000 | | ✓ | 16A4h | 0000h to FFFFh | 1 | |
| P163 | Flexible command writing register 4 | 0000h to FFFFh | 0000 | | ✓ | 16A5h | 0000h to FFFFh | 1 | |
| P164 | Flexible command writing register 5 | 0000h to FFFFh | 0000 | | ✓ | 16A6h | 0000h to FFFFh | 1 | |
| P165 | Flexible command writing register 6 | 0000h to FFFFh | 0000 | | ✓ | 16A7h | 0000h to FFFFh | 1 | |
| P166 | Flexible command writing register 7 | 0000h to FFFFh | 0000 | | ✓ | 16A8h | 0000h to FFFFh | 1 | |
| P167 | Flexible command writing register 8 | 0000h to FFFFh | 0000 | | ✓ | 16A9h | 0000h to FFFFh | 1 | |
| P168 | Flexible command writing register 9 | 0000h to FFFFh | 0000 | | ✓ | 16AAh | 0000h to FFFFh | 1 | |
| P169 | Flexible command writing register 10 | 0000h to FFFFh | 0000 | | ✓ | 16ABh | 0000h to FFFFh | 1 | |
| P170 | Flexible command reading register 1 | 0000h to FFFFh | 0000 | | ✓ | 16ACh | 0000h to FFFFh | 1 | |
| P171 | Flexible command reading register 2 | 0000h to FFFFh | 0000 | | ✓ | 16ADh | 0000h to FFFFh | 1 | |
| P172 | Flexible command reading register 3 | 0000h to FFFFh | 0000 | | ✓ | 16AEh | 0000h to FFFFh | 1 | |

| Code | Name | Data range | Initial value | Set value | Change during running | Modbus communication | | | Page |
|---|---|---|---|---|---|---|---|---|---|
| | | | | | | Register No. | Data Range | Resolution | |
| P173 | Flexible command reading register 4 | 0000h to FFFFh | 0000 | | ✓ | 16AFh | 0000h to FFFFh | 1 | 13-2-2 |
| P174 | Flexible command reading register 5 | 0000h to FFFFh | 0000 | | ✓ | 16B0h | 0000h to FFFFh | 1 | |
| P175 | Flexible command reading register 6 | 0000h to FFFFh | 0000 | | ✓ | 16B1h | 0000h to FFFFh | 1 | |
| P176 | Flexible command reading register 7 | 0000h to FFFFh | 0000 | | ✓ | 16B2h | 0000h to FFFFh | 1 | |
| P177 | Flexible command reading register 8 | 0000h to FFFFh | 0000 | | ✓ | 16B3h | 0000h to FFFFh | 1 | |
| P178 | Flexible command reading register 9 | 0000h to FFFFh | 0000 | | ✓ | 16B4h | 0000h to FFFFh | 1 | |
| P179 | Flexible command reading register 10 | 0000h to FFFFh | 0000 | | ✓ | 16B5h | 0000h to FFFFh | 1 | |
| P180 | PROFIBUS Node address | 0 to 125 | 0 | | × | 16B6h | 0 to 125 | 1 | |
| P181 | PROFIBUS Clear Mode selection | 00: Clear<br>01: Keep last value | 00 | | × | 16B7h | 0 to 1 | - | |
| P182 | PROFIBUS Map selection | 00: PPO type<br>01: Conventional<br>02: Flexible mode | 00 | | × | 16B8h | 0 to 2 | - | |
| P185 | CANopen Node address | 0 to 127 | 0 | | × | 16BBh | 0 to 127 | 1 | - |
| P186 | CANopen Baud rate | 00: Auto<br>01: 10kbps / 02: 20kbps<br>03: 50kbps / 04: 125kbps<br>05: 250kbp / 06: 500kbps<br>07: 800kbp / 08: 1Mbps | 06 | | × | 16BCh | 0 to 8 | - | - |
| P190 | CompoNet Node address | 00 to 63 | 0 | | × | 16C0h | 0 to 63 | 1 | - |
| P192 | DeviceNet MAC ID | 00 to 63 | 63 | | × | 16C2h | 0 to 63 | 1 | - |
| P195 | ML2 frame length | 00: 32bytes / 01: 17bytes | 00 | | × | 16C5h | 0 to 1 | - | - |
| P196 | ML2 Node address | 21h to 3Eh | 21h | | × | 16C6h | 21 to 3Eh | 1 | - |
| P200 | Register mapping selection | 00: Standard Modbus address<br>01: Enable Modbus mapping function | 00 | | ✓ | 16C8h | 0 to 1 | - | 11-3-1 |
| P201 | External register 1 | 0000h to FFFFh | 0000h | | ✓ | 16C9h | 0000h to FFFFh | 1 | |
| P202 | External register 2 | 0000h to FFFFh | 0000h | | ✓ | 16CAh | 0000h to FFFFh | 1 | |
| P203 | External register 3 | 0000h to FFFFh | 0000h | | ✓ | 16CBh | 0000h to FFFFh | 1 | |
| P204 | External register 4 | 0000h to FFFFh | 0000h | | ✓ | 16CCh | 0000h to FFFFh | 1 | |
| P205 | External register 5 | 0000h to FFFFh | 0000h | | ✓ | 16CDh | 0000h to FFFFh | 1 | |
| P206 | External register 6 | 0000h to FFFFh | 0000h | | ✓ | 16CEh | 0000h to FFFFh | 1 | |
| P207 | External register 7 | 0000h to FFFFh | 0000h | | ✓ | 16CFh | 0000h to FFFFh | 1 | |
| P208 | External register 8 | 0000h to FFFFh | 0000h | | ✓ | 16D0h | 0000h to FFFFh | 1 | |
| P209 | External register 9 | 0000h to FFFFh | 0000h | | ✓ | 16D1h | 0000h to FFFFh | 1 | |
| P210 | External register 10 | 0000h to FFFFh | 0000h | | ✓ | 16D2h | 0000h to FFFFh | 1 | |
| P211 | External register 1 format | 00: Unsigned word data<br>01: Signed word data | 00 | | ✓ | 16D3h | 0 to 1 | - | |
| P212 | External register 2 format | 00: Unsigned word data<br>01: Signed word data | 00 | | ✓ | 16D4h | 0 to 1 | - | |
| P213 | External register 3 format | 00: Unsigned word data<br>01: Signed word data | 00 | | ✓ | 16D5h | 0 to 1 | - | |
| P214 | External register 4 format | 00: Unsigned word data<br>01: Signed word data | 00 | | ✓ | 16D6h | 0 to 1 | - | |
| P215 | External register 5 format | 00: Unsigned word data<br>01: Signed word data | 00 | | ✓ | 16D7h | 0 to 1 | - | |
| P216 | External register 6 format | 00: Unsigned word data<br>01: Signed word data | 00 | | ✓ | 16D8h | 0 to 1 | - | |

| Code | Name | Data range | Initial value | Set value | Change during running | Modbus communication | | | Page |
|---|---|---|---|---|---|---|---|---|---|
| | | | | | | Register No. | Data Range | Resolution | |
| P217 | External register 7 format | 00: Unsigned word data<br>01: Signed word data | 00 | | ✓ | 16D9h | 0 to 1 | - | 11-3-1 |
| P218 | External register 8 format | 00: Unsigned word data<br>01: Signed word data | 00 | | ✓ | 16DAh | 0 to 1 | - | |
| P219 | External register 9 format | 00: Unsigned word data<br>01: Signed word data | 00 | | ✓ | 16DBh | 0 to 1 | - | |
| P220 | External register 10 format | 00: Unsigned word data<br>01: Signed word data | 00 | | ✓ | 16DCh | 0 to 1 | - | |
| P221 | External register 1 scaling | 0.001 to 65.535 | 1.000 | | ✓ | 16DDh | 1 to 65535 | 0.001 | |
| P222 | External register 2 scaling | 0.001 to 65.535 | 1.000 | | ✓ | 16DEh | 1 to 65535 | 0.001 | |
| P223 | External register 3 scaling | 0.001 to 65.535 | 1.000 | | ✓ | 16DFh | 1 to 65535 | 0.001 | |
| P224 | External register 4 scaling | 0.001 to 65.535 | 1.000 | | ✓ | 16E0h | 1 to 65535 | 0.001 | |
| P225 | External register 5 scaling | 0.001 to 65.535 | 1.000 | | ✓ | 16E1h | 1 to 65535 | 0.001 | |
| P226 | External register 6 scaling | 0.001 to 65.535 | 1.000 | | ✓ | 16E2h | 1 to 65535 | 0.001 | |
| P227 | External register 7 scaling | 0.001 to 65.535 | 1.000 | | ✓ | 16E3h | 1 to 65535 | 0.001 | |
| P228 | External register 8 scaling | 0.001 to 65.535 | 1.000 | | ✓ | 16E4h | 1 to 65535 | 0.001 | |
| P229 | External register 9 scaling | 0.001 to 65.535 | 1.000 | | ✓ | 16E5h | 1 to 65535 | 0.001 | |
| P230 | External register 10 scaling | 0.001 to 65.535 | 1.000 | | ✓ | 16E6h | 1 to 65535 | 0.001 | |
| P301 | Internal register 1 | 0000h to FFFFh | 0000h | | ✓ | 16E7h | 0000h to FFFFh | 1 | |
| P302 | Internal register 2 | 0000h to FFFFh | 0000h | | ✓ | 16E8h | 0000h to FFFFh | 1 | |
| P303 | Internal register 3 | 0000h to FFFFh | 0000h | | ✓ | 16E9h | 0000h to FFFFh | 1 | |
| P304 | Internal register 4 | 0000h to FFFFh | 0000h | | ✓ | 16EAh | 0000h to FFFFh | 1 | |
| P305 | Internal register 5 | 0000h to FFFFh | 0000h | | ✓ | 16EBh | 0000h to FFFFh | 1 | |
| P306 | Internal register 6 | 0000h to FFFFh | 0000h | | ✓ | 16ECh | 0000h to FFFFh | 1 | |
| P307 | Internal register 7 | 0000h to FFFFh | 0000h | | ✓ | 16EDh | 0000h to FFFFh | 1 | |
| P308 | Internal register 8 | 0000h to FFFFh | 0000h | | ✓ | 16EEh | 0000h to FFFFh | 1 | |
| P309 | Internal register 9 | 0000h to FFFFh | 0000h | | ✓ | 16EFh | 0000h to FFFFh | 1 | |
| P310 | Internal register 10 | 0000h to FFFFh | 0000h | | ✓ | 16F0h | 0000h to FFFFh | 1 | |
| P400 | Endian selection | 00: Big endian<br>01: Little endian<br>02: Special endian | 00 | | ✓ | 16F1h | 0 to 2 | - | 11-2-14 |
| P900 | Single-phase encoder pulse half/whole cycle selection*3 | 00: Half cycle<br>01: whole cycle | 00 | | ✓ | 16F6h | 0 to 1 | - | - |
| P901 | Speed detection filter constant for encoder pulse | 0 to 9999 (ms) | 20 | | ✓ | 16F7h | 0 to 9999 | 1 | 9-5-8<br>9-5-14<br>10-1-3 |

*3. This parameter is a dummy parameter. User settings are disabled and the inverter always operate as "Whole cycle (01)". Data can be read and written by Modbus communication, etc.

## 18.2.10 U Parameter Group

| Code | Name | Data range | Initial value | Set value | Change during running | Modbus communication | | | Page |
|---|---|---|---|---|---|---|---|---|---|
| | | | | | | Register No. | Data Range | Resolution | |
| U001 | User-parameter 1 selection | no/ d001 to P196 | no | | ✓ | - | - | - | 7-2-1<br>7-2-9 |
| U002 | User-parameter 2 selection | no/ d001 to P196 | no | | ✓ | - | - | - | |
| U003 | User-parameter 3 selection | no/ d001 to P196 | no | | ✓ | - | - | - | |
| U004 | User-parameter 4 selection | no/ d001 to P196 | no | | ✓ | - | - | - | |
| U005 | User-parameter 5 selection | no/ d001 to P196 | no | | ✓ | - | - | - | |
| U006 | User-parameter 6 selection | no/ d001 to P196 | no | | ✓ | - | - | - | |
| U007 | User-parameter 7 selection | no/ d001 to P196 | no | | ✓ | - | - | - | |
| U008 | User-parameter 8 selection | no/ d001 to P196 | no | | ✓ | - | - | - | |
| U009 | User-parameter 9 selection | no/ d001 to P196 | no | | ✓ | - | - | - | |
| U010 | User-parameter 10 selection | no/ d001 to P196 | no | | ✓ | - | - | - | |
| U011 | User-parameter 11 selection | no/ d001 to P196 | no | | ✓ | - | - | - | |
| U012 | User-parameter 12 selection | no/ d001 to P196 | no | | ✓ | - | - | - | |
| U013 | User-parameter 13 selection | no/ d001 to P196 | no | | ✓ | - | - | - | |
| U014 | User-parameter 14 selection | no/ d001 to P196 | no | | ✓ | - | - | - | |
| U015 | User-parameter 15 selection | no/ d001 to P196 | no | | ✓ | - | - | - | |
| U016 | User-parameter 16 selection | no/ d001 to P196 | no | | ✓ | - | - | - | |
| U017 | User-parameter 17 selection | no/ d001 to P196 | no | | ✓ | - | - | - | |
| U018 | User-parameter 18 selection | no/ d001 to P196 | no | | ✓ | - | - | - | |
| U019 | User-parameter 19 selection | no/ d001 to P196 | no | | ✓ | - | - | - | |
| U020 | User-parameter 20 selection | no/ d001 to P196 | no | | ✓ | - | - | - | |
| U021 | User-parameter 21 selection | no/ d001 to P196 | no | | ✓ | - | - | - | |
| U022 | User-parameter 22 selection | no/ d001 to P196 | no | | ✓ | - | - | - | |
| U023 | User-parameter 23 selection | no/ d001 to P196 | no | | ✓ | - | - | - | |
| U024 | User-parameter 24 selection | no/ d001 to P196 | no | | ✓ | - | - | - | |
| U025 | User-parameter 25 selection | no/ d001 to P196 | no | | ✓ | - | - | - | |
| U026 | User-parameter 26 selection | no/ d001 to P196 | no | | ✓ | - | - | - | |
| U027 | User-parameter 27 selection | no/ d001 to P196 | no | | ✓ | - | - | - | |
| U028 | User-parameter 28 selection | no/ d001 to P196 | no | | ✓ | - | - | - | |
| U029 | User-parameter 29 selection | no/ d001 to P196 | no | | ✓ | - | - | - | |
| U030 | User-parameter 30 selection | no/ d001 to P196 | no | | ✓ | - | - | - | |
| U031 | User-parameter 31 selection | no/ d001 to P196 | no | | ✓ | - | - | - | |
| U032 | User-parameter 32 selection | no/ d001 to P196 | no | | ✓ | - | - | - | |

(Memo)

A

# Appendix

This chapter describes comparison of WJ200 and WJ-C1, explanations of terms, index and revision history.

**A.1 Replacement from WJ200 ..... A-1-1**
A.1.1 Comparison of External Dimensions and Mounting Dimensions ..... A-1-1
A.1.2 Comparison of Main Circuit Terminal Block ..... A-1-7
A.1.3 Comparison of Control Circuit Terminal Block ..... A-1-11
A.1.4 Data Copy from WJ200 to WJ-C1 ..... A-1-14
A.1.5 Comparison of Functions of WJ200 and WJ-C1 ..... A-1-15
A.1.6 WJ200 High Frequency Compatible Mode ..... A-1-18
**A.2 Glossary ..... A-2-1**
**A.3 Revision History ..... A-3-1**
**A.4 Index ..... A-4-1**

# A.1 Replacement from WJ200

## A.1.1 Comparison of External Dimensions and Mounting Dimensions

A

- The external dimensions and mounting dimensions of WJ200 Series and WJ-C1 are identical. Refer to the figure below for differences in other dimensions. (The depth of C1-110LF/C1-110HF/C1-150HF is 10 mm shorter.)

| WJ200 | WJ-C1 |
|---|---|
| Single-phase 200 V 001SF/002SF/004SF<br>Three-phase 200 V 001LF/002LF/004LF/007LF | Single-phase 200 V 001SF/002SF/004SF<br>Three-phase 200 V 001LF/002LF/004LF/007LF |

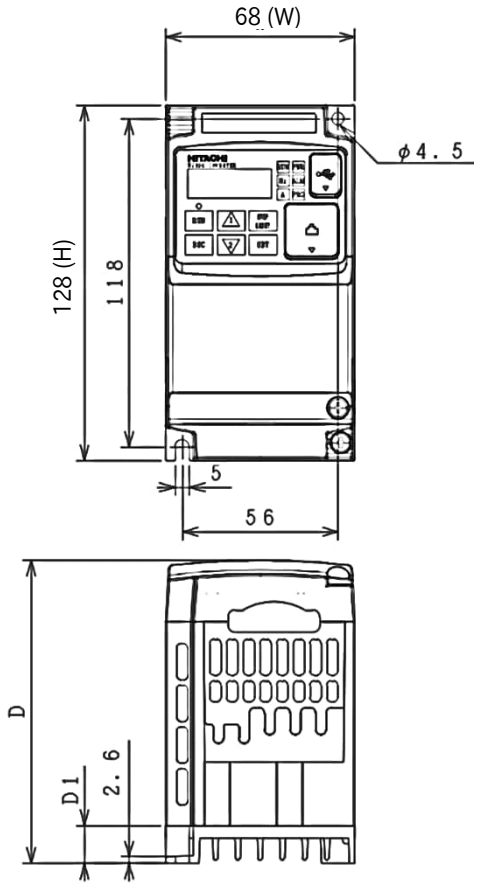


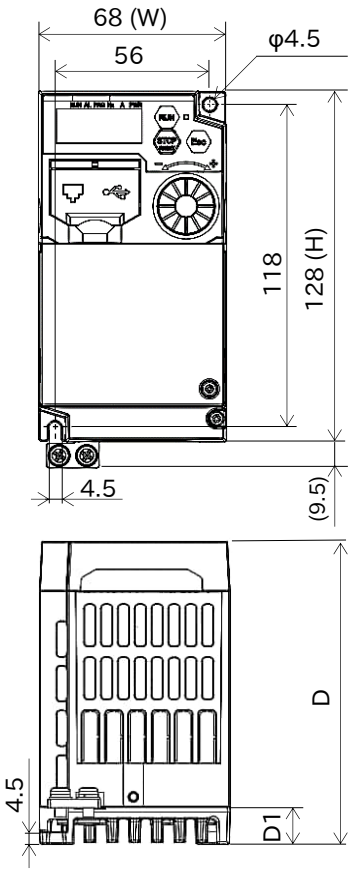


| Model | W (mm) | H (mm) | D (mm) | D1 (mm) |
|---|---|---|---|---|
| WJ200-001SF | 68 | 128 | 109 | 13.5 |
| WJ200-002SF | | | | |
| WJ200-004SF | | | 122.5 | 27 |
| WJ200-001LF | | | 109 | 13.5 |
| WJ200-002LF | | | | |
| WJ200-004LF | | | 122.5 | 27 |
| WJ200-007LF | | | 145.5 | 50 |

| Model | W (mm) | H (mm) | D (mm) | D1 (mm) |
|---|---|---|---|---|
| C1-001SF | 68 | 128 | 109 | 13.5 |
| C1-002SF | | | | |
| C1-004SF | | | 122.5 | 27 |
| C1-001LF | | | 109 | 13.5 |
| C1-002LF | | | | |
| C1-004LF | | | 122.5 | 27 |
| C1-007LF | | | 145.5 | 50 |

| WJ200 | WJ-C1 |
|---|---|
| Single-phase 200 V 007SF/015SF/022SF<br>Three-phase 200 V 0015LF/022LF<br>Three-phase 400 V 004HF/007HF/015HF<br>/022HF/030HF | Single-phase 200 V 007SF/015SF/022SF<br>Three-phase 200 V 0015LF/022LF<br>Three-phase 400 V 004HF/007HF/015HF<br>/022HF/030HF |

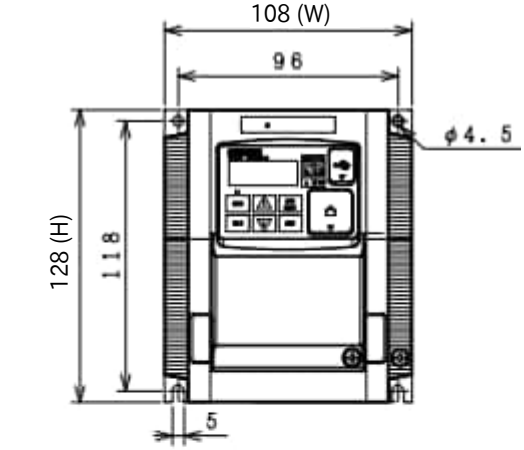


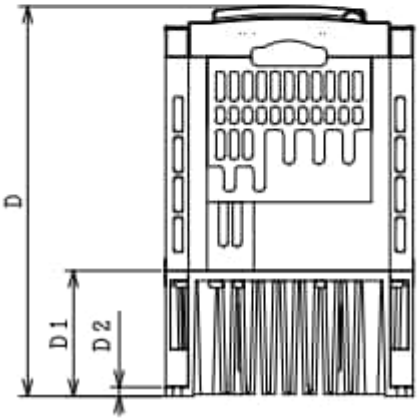


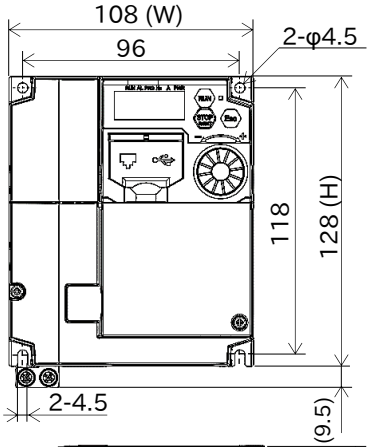


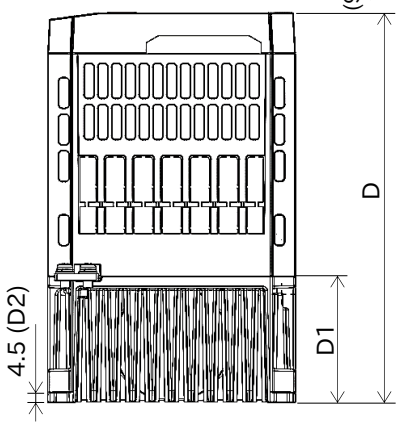


| Model | W (mm) | H (mm) | D (mm) | D1 (mm) | D2 (mm) |
|---|---|---|---|---|---|
| WJ200-007SF | 108 | 128 | 170.5 | 55 | 4.4 |
| WJ200-015SF | | | | | |
| WJ200-022SF | | | | | |
| WJ200-015LF | | | | | |
| WJ200-022LF | | | | | |
| WJ200-004HF | | | 143.5 | 28 | 4.3 |
| WJ200-007HF | | | 170.5 | 55 | 4.4 |
| WJ200-015HF | | | | | |
| WJ200-022HF | | | | | |
| WJ200-030HF | | | | | |

| Model | W (mm) | H (mm) | D (mm) | D1 (mm) | D2 (mm) |
|---|---|---|---|---|---|
| C1-007SF | 108 | 128 | 170.5 | 55.5 | 4.5 |
| C1-015SF | | | | | |
| C1-022SF | | | | | |
| C1-015LF | | | | | |
| C1-022LF | | | | | |
| C1-004HF | | | 143.5 | 28.5 | |
| C1-007HF | | | 170.5 | 55.5 | |
| C1-015HF | | | | | |
| C1-022HF | | | | | |
| C1-030HF | | | | | |

| WJ200 | WJ-C1 |
|---|---|
| Three-phase 200 V 037LF<br>Three-phase 400 V 040HF | Three-phase 200 V 037LF<br>Three-phase 400 V 040HF |

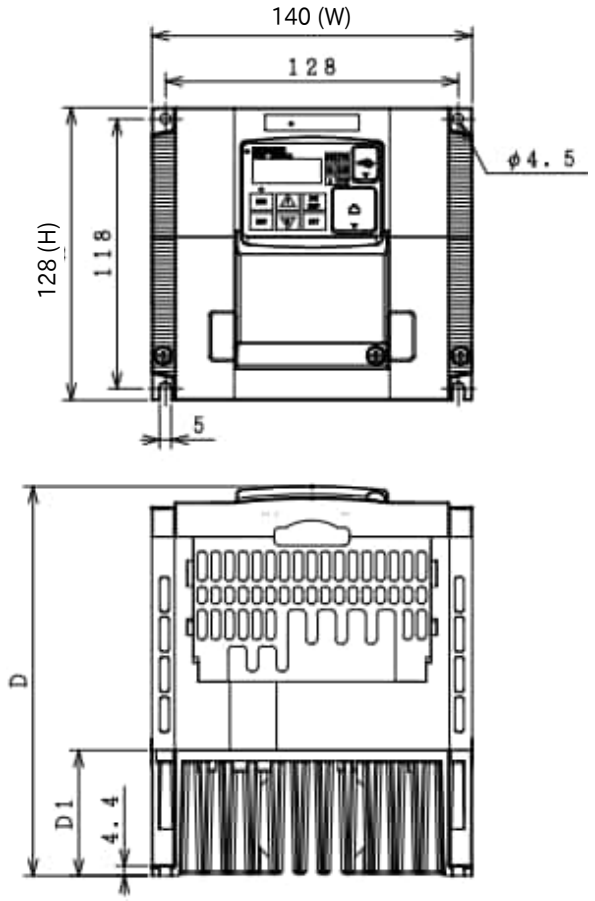


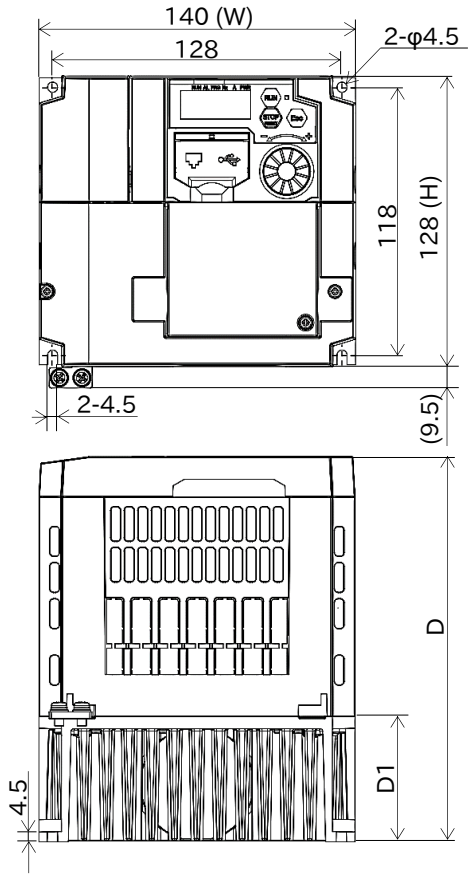


| Model | W (mm) | H (mm) | D (mm) | D1 (mm) |
|---|---|---|---|---|
| WJ200-037LF | 140 | 128 | 170.5 | 55 |
| WJ200-040HF | | | | |

| Model | W (mm) | H (mm) | D (mm) | D1 (mm) |
|---|---|---|---|---|
| C1-037LF | 140 | 128 | 170.5 | 55.5 |
| C1-040HF | | | | |

| WJ200 | WJ-C1 |
|---|---|
| Three-phase 200 V 0557LF/075LF<br>Three-phase 400 V 055HF/075HF | Three-phase 200 V 0557LF/075LF<br>Three-phase 400 V 055HF/075HF |

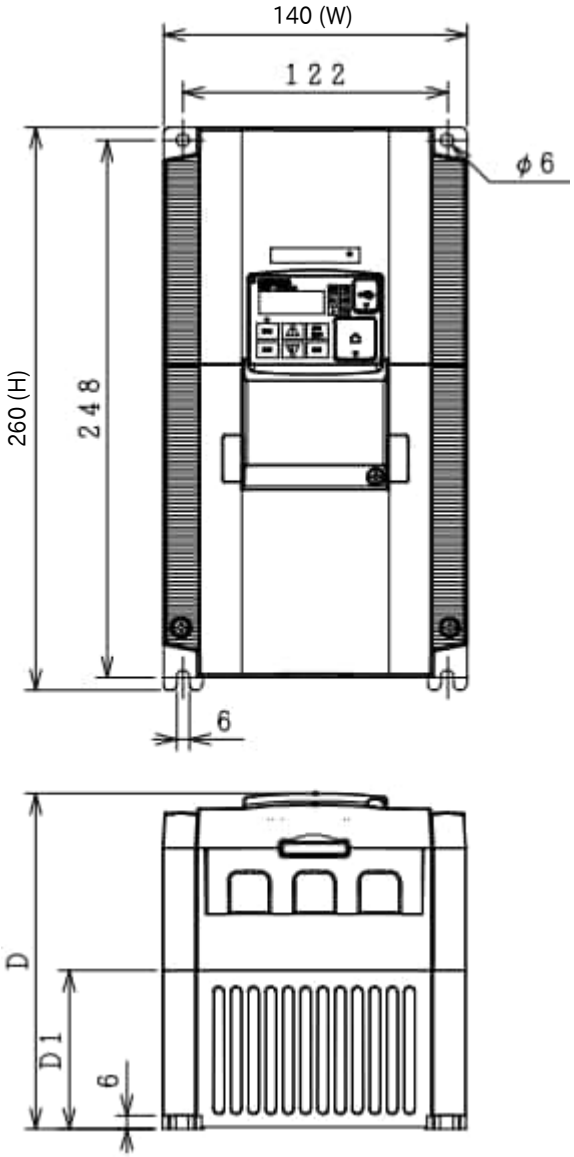


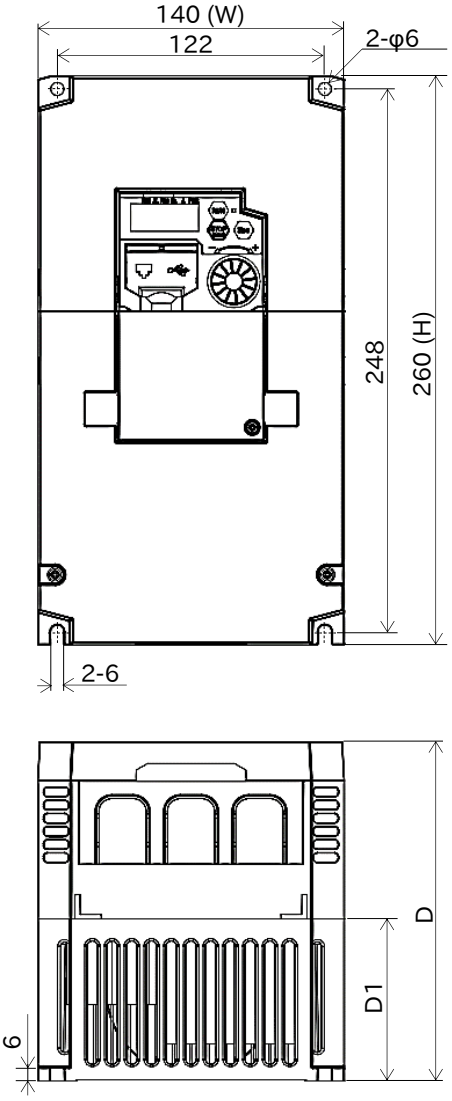


| Model | W (mm) | H (mm) | D (mm) | D1 (mm) |
|---|---|---|---|---|
| WJ200-055LF | 140 | 260 | 155 | 73.3 |
| WJ200-075LF | | | | |
| WJ200-055HF | | | | |
| WJ200-075HF | | | | |

| Model | W (mm) | H (mm) | D (mm) | D1 (mm) |
|---|---|---|---|---|
| C1-055LF | 140 | 260 | 155 | 74 |
| C1-075LF | | | | |
| C1-055HF | | | | |
| C1-075HF | | | | |

| WJ200 | WJ-C1 |
|---|---|
| Three-phase 200 V 110LF<br>Three-phase 400 V 110HF/150HF | Three-phase 200 V 110LF<br>Three-phase 400 V 110HF/150HF |

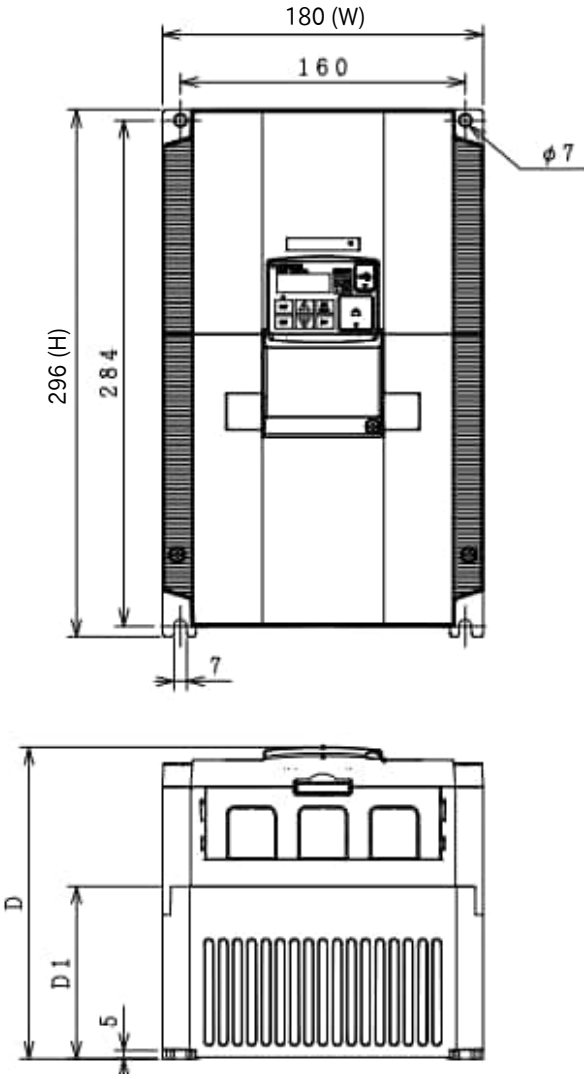


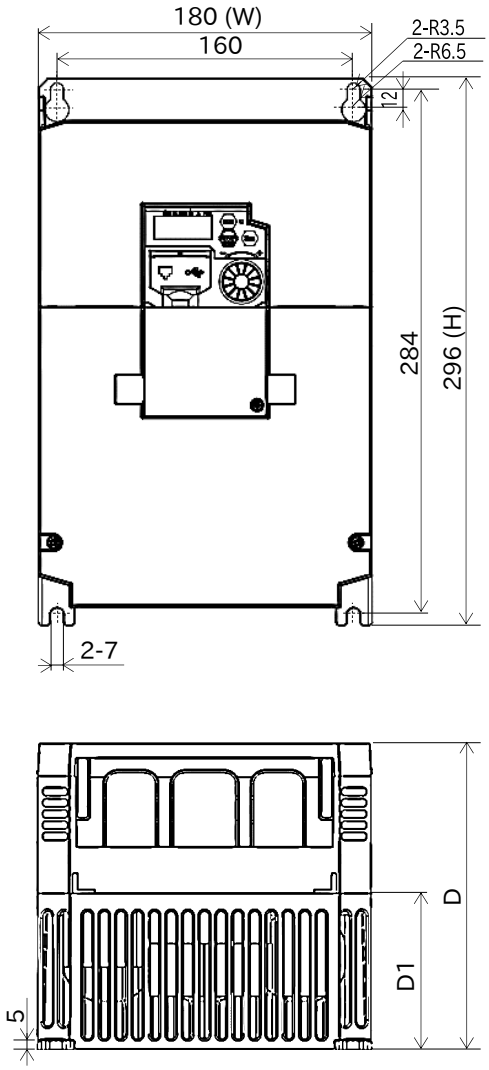


| Model | W (mm) | H (mm) | D (mm) | D1 (mm) |
|---|---|---|---|---|
| WJ200-110LF | 180 | 296 | 175 | 97 |
| WJ200-110HF | | | | |
| WJ200-150HF | | | | |

| Model | W (mm) | H (mm) | D (mm) | D1 (mm) |
|---|---|---|---|---|
| C1-110LF | 180 | 296 | 165 | 84 |
| C1-110HF | | | | |
| C1-150HF | | | | |

| WJ200 | WJ-C1 |
|---|---|
| Three-phase 200 V 150LF | Three-phase 200 V 150LF |

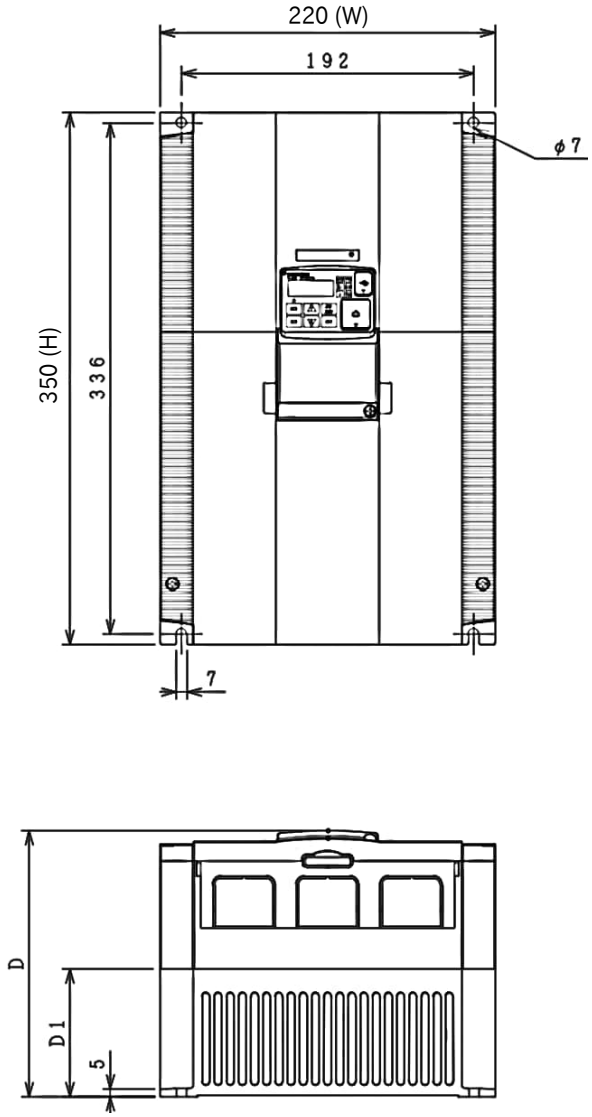


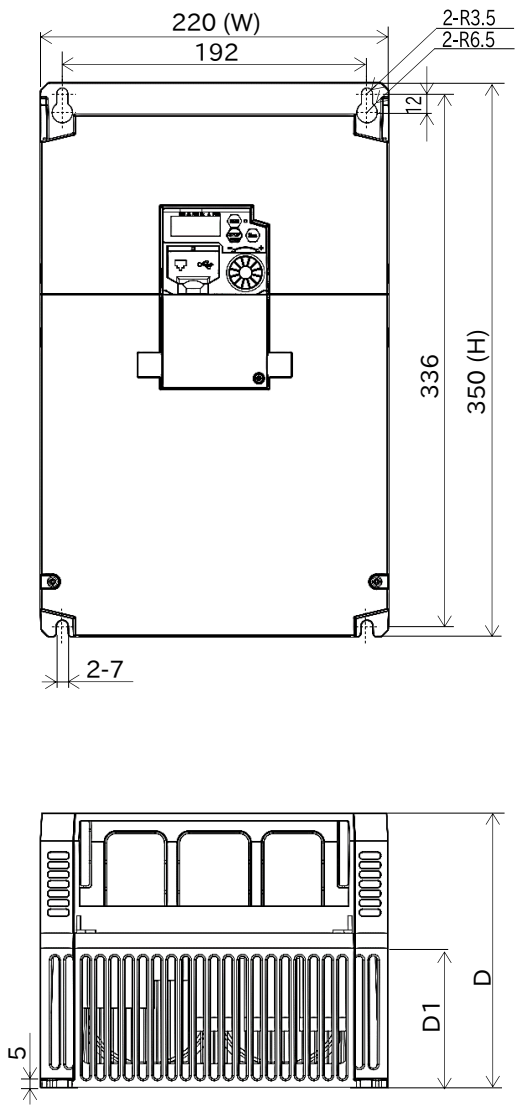


| Model | W (mm) | H (mm) | D (mm) | D1 (mm) |
|---|---|---|---|---|
| WJ200-150LF | 220 | 350 | 175 | 84 |

| Model | W (mm) | H (mm) | D (mm) | D1 (mm) |
|---|---|---|---|---|
| C1-150LF | 220 | 350 | 175 | 98 |

## A.1.2 Comparison of Main Circuit Terminal Block

- The main circuit terminal block arrangement of WJ200 Series and WJ-C1 differs greatly. Be careful not to make incorrect wiring during replacement, etc.
- In WJ-C1 single-phase 200 V all models/three-phase 200 V 0.1 to 3.7 kW/three-phase 400 V 0.4 to 4.0 kW, the ground terminal is the ground bar (M4×2) on the left side of the bottom of the inverter.

### Single-phase 200 V 0.1 kW to 0.4 kW

| WJ200-001SF/002SF/004SF | C1-001SF/002SF/004SF |
|---|---|
| 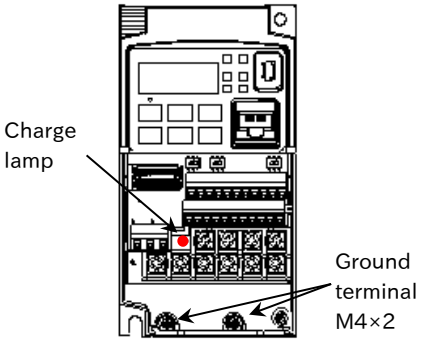 | 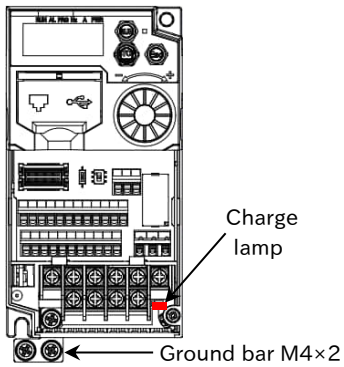 |
| 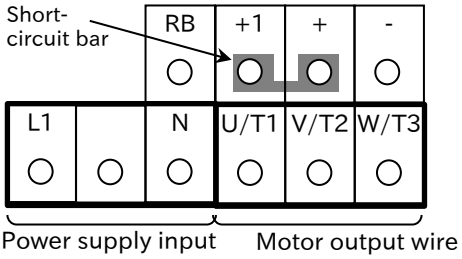 <br>Screw size: M3.5<br>Terminal block width: 7.6 mm | 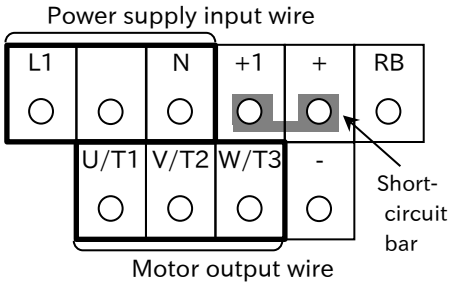 <br>Screw size: M3.5<br>Terminal block width: 7.3 mm |

### Single-phase 200 V 0.75 kW to 2.2 kW

| WJ200-007SF/015SF/022SF | C1-007SF/015SF/022SF |
|---|---|
| 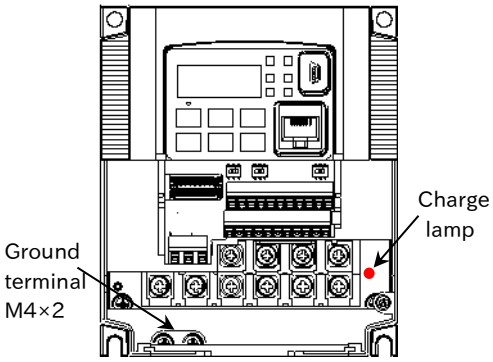 | 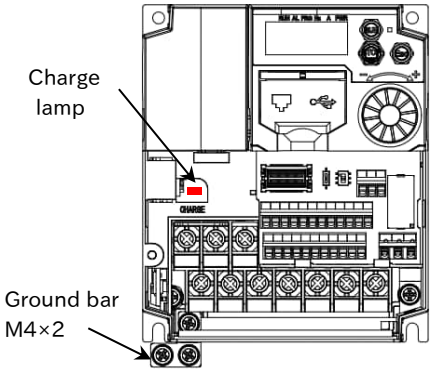 |
| 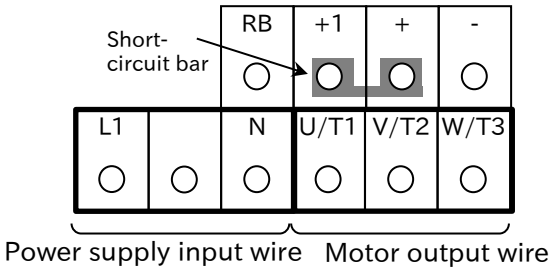 <br>Screw size: M4<br>Terminal block width: 10 mm | 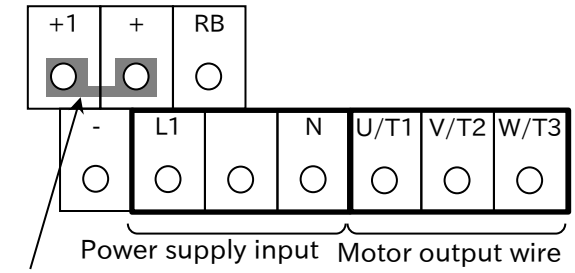 <br>Screw size: M4<br>Terminal block width: 9.9 mm |

## Three-phase 200 V 0.1 kW to 0.75 kW

### WJ200-001LF/002LF/004LF/007LF

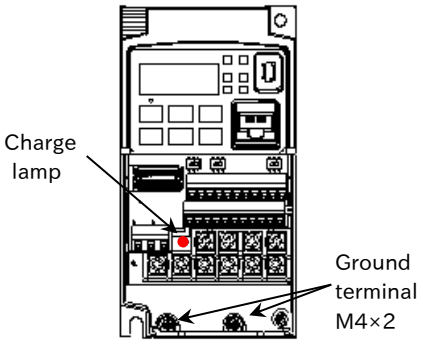


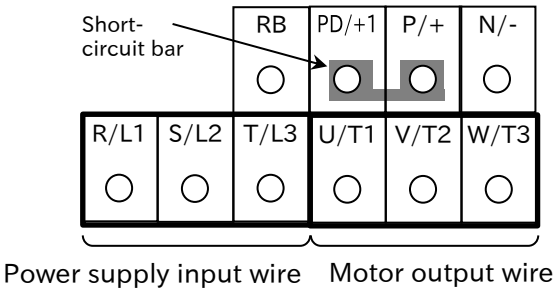


| | |
|---|---|
| Screw size | M3.5 |
| Terminal block width | 7.6 mm |

### C1-001LF/002LF/004LF/007LF

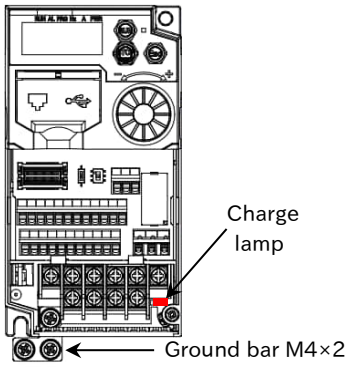


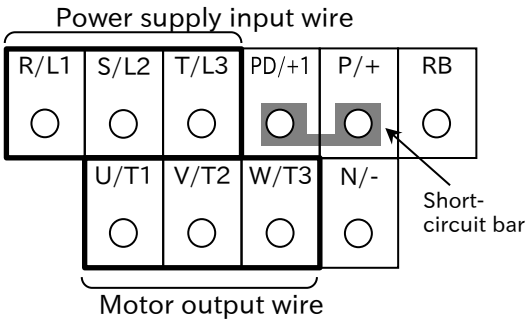


| | |
|---|---|
| Screw size | M3.5 |
| Terminal block width | 7.3 mm |

## Three-phase 200 V 1.5 kW to 2.2 kW, Three-phase 400 V 0.4 kW to 3.0 kW

### WJ200-015LF/022LF 004HF/007HF/015HF/022HF/030HF

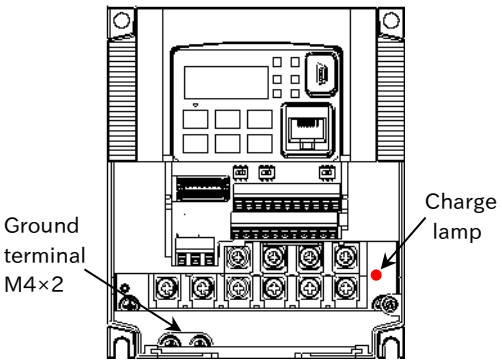


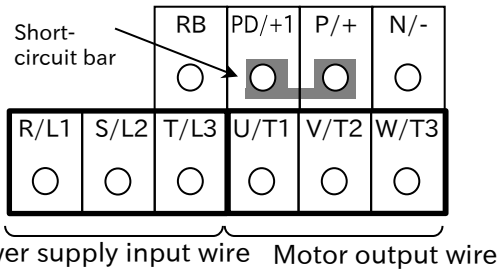


| | |
|---|---|
| Screw size | M4 |
| Terminal block width | 10 mm |

### C1-015LF/022LF 004HF/007HF/015HF/022HF/030HF

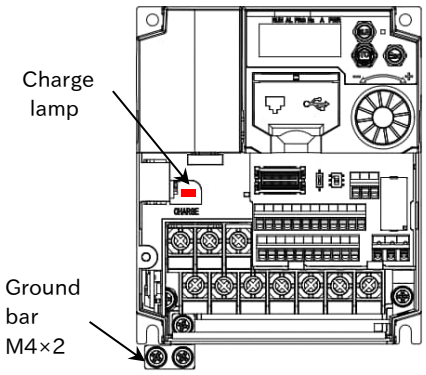


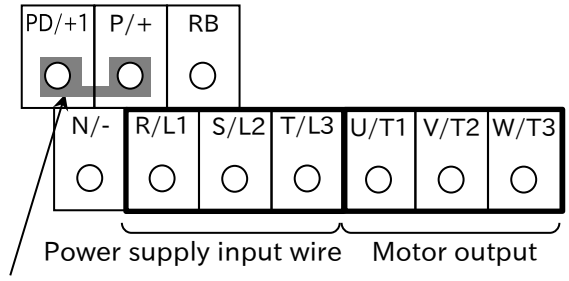


| | |
|---|---|
| Screw size | M4 |
| Terminal block width | 9.9 mm |

## Three-phase 200 V 3.7 kW, Three-phase 400 V 4.0 kW

### WJ200-037LF/040HF

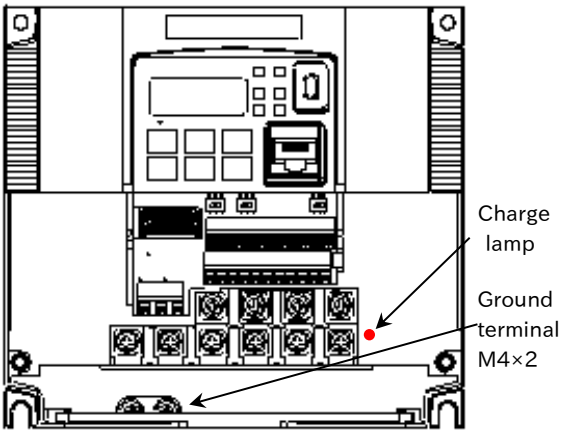


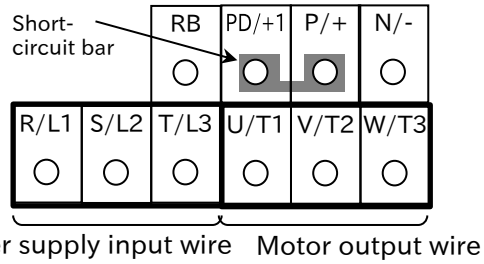


| | |
|---|---|
| Screw size | M4 |
| Terminal block width | 10 mm |

### C1-037LF/040HF

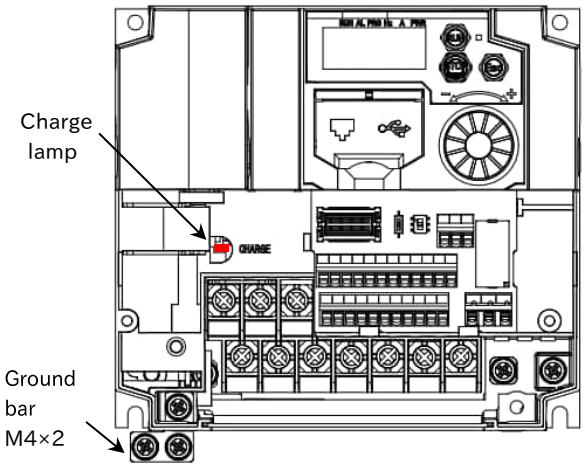


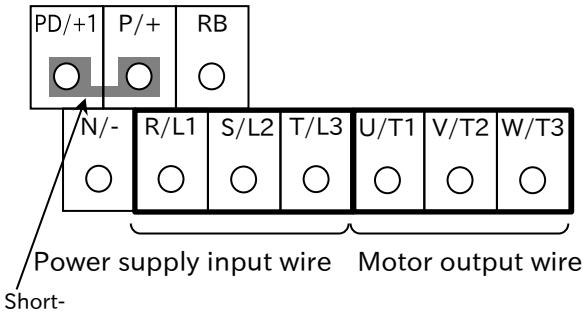


| | |
|---|---|
| Screw size | M4 |
| Terminal block width | 9.9 mm |

## Three-phase 200 V 5.5 kW/7.5 kW, Three-phase 400 V 5.5 kW/7.5 kW

### WJ200-055LF/075LF/055HF/075HF

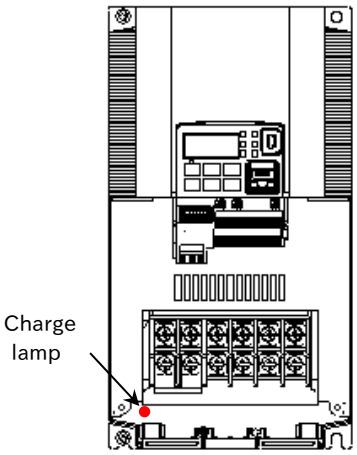


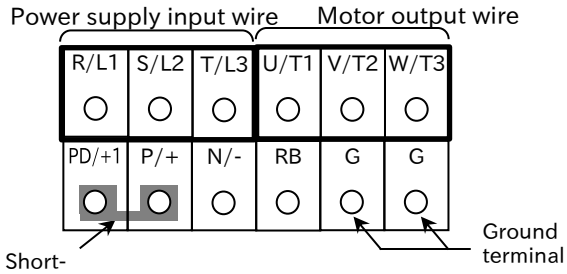


| | |
|---|---|
| Screw size | M5 |
| Terminal block width | 13 mm |

### C1-055LF/075LF/055HF/075HF

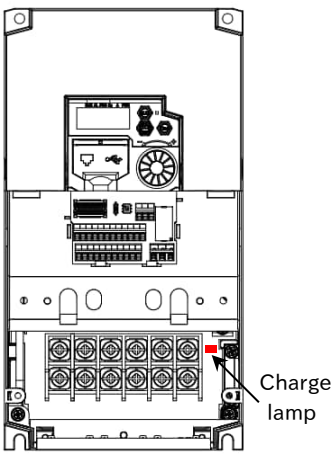


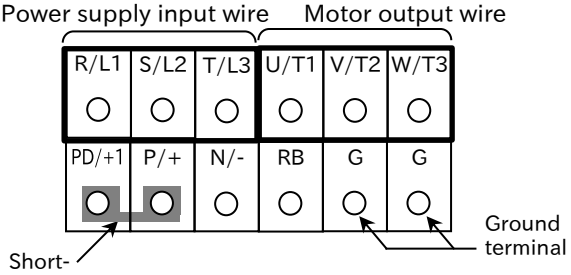


| | |
|---|---|
| Screw size | M5 |
| Terminal block width | 13 mm |

## Three-phase 200 V 11 kW, Three-phase 400 V 11 kW/15 kW

### WJ200-110LF/110HF/150HF

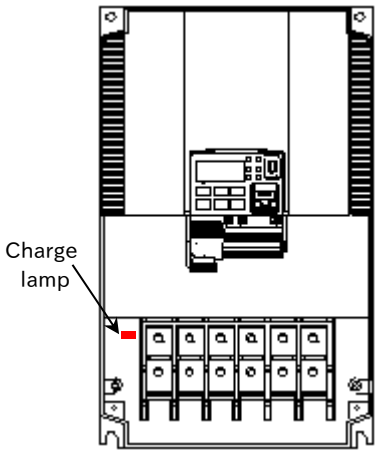


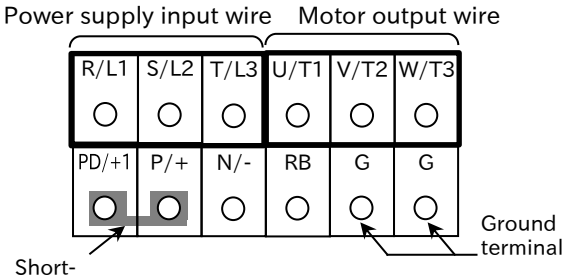


| | |
|---|---|
| Screw size | M6 |
| Terminal block width | 17.5 mm |

### C1-110LF/110HF/150HF

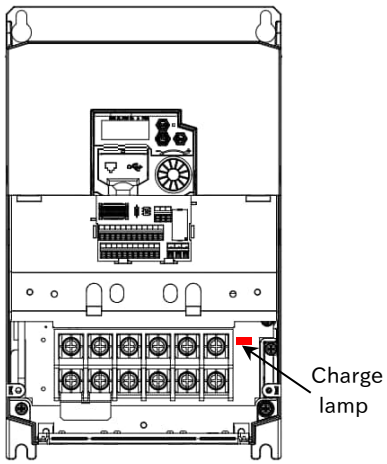


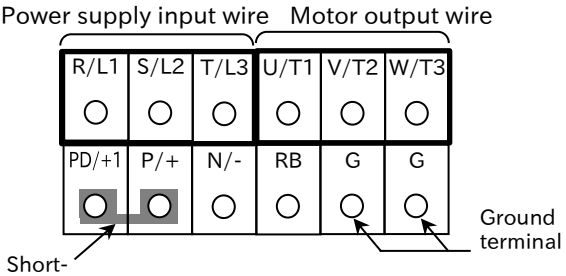


| | |
|---|---|
| Screw size | M6 |
| Terminal block width | 16.5 mm |

## Three-phase 200V 15kW

### WJ200-150LF

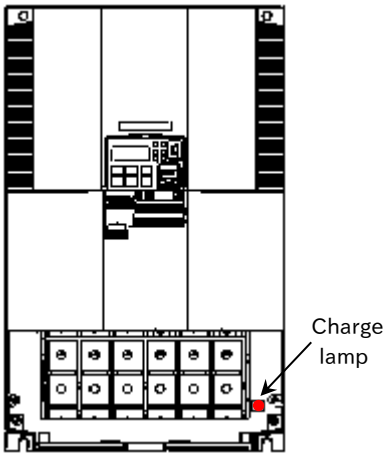


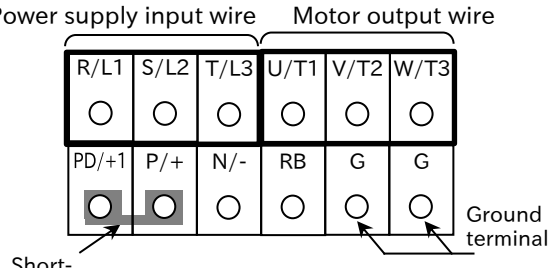


| | |
|---|---|
| Screw size | M8 |
| Terminal block width | 23 mm |

### C1-150LF

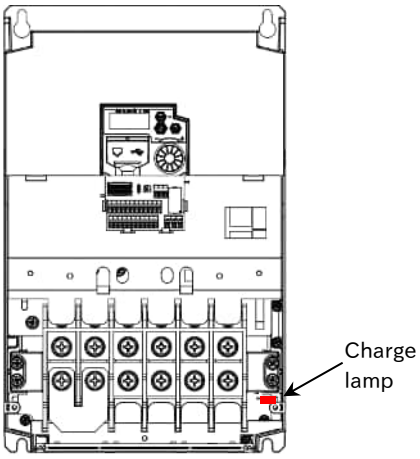


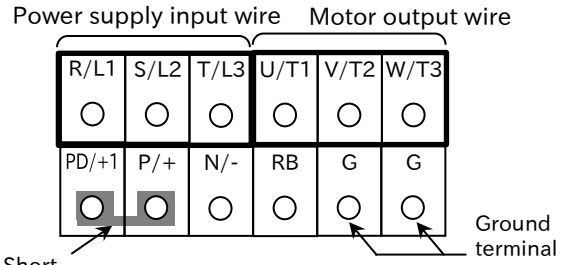


| | |
|---|---|
| Screw size | M8 |
| Terminal block width | 23 mm |

## A.1.3 Comparison of Control Circuit Terminal

A

- Spring clamp type terminal block is used for control circuit terminal of both WJ200 and WJ-C1, and the recommended wire diameter and terminal are the same. For details, refer to "5.4.2 Recommended Wire Diameter and Wiring Method for Control Circuit Terminals".

### Comparison of control circuit terminal arrangement

WJ200

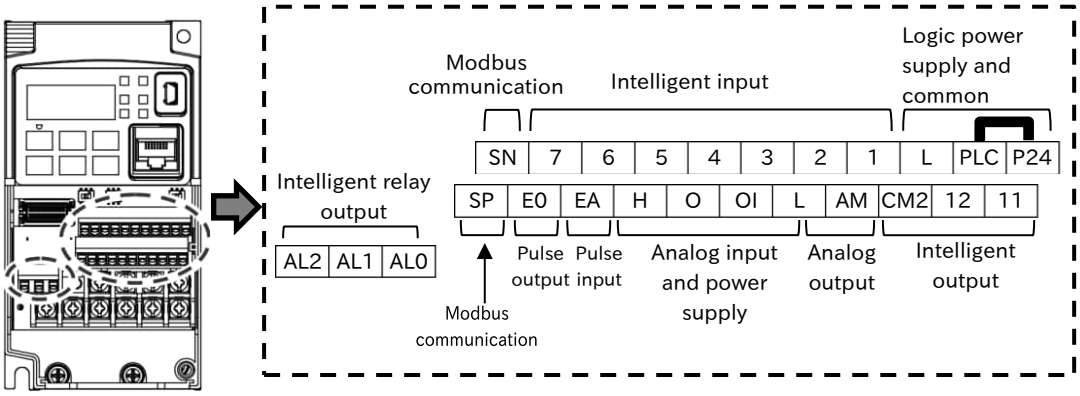


WJ-C1

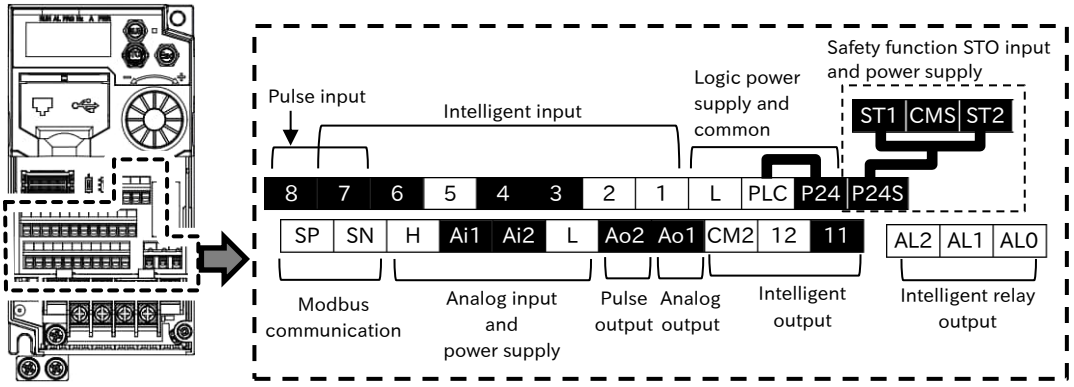


* Terminals that have been added/changed electrical characteristics or changed functions compared to WJ200 are outlined in white. For those whose terminal symbols only have been changed, refer to the following comparison table.

### Major changes of control circuit terminal function

| Item | WJ200 | | WJ-C1 | |
|---|---|---|---|---|
| | Symbol | Description | Symbol | Description |
| Safety input | GS1<br>GS2 | By turning ON the safety function selector switch on the control board, input terminals [3] and [4] are switched to the safety function STO input terminals [GS1] and [GS2]. | ST1<br>ST2<br>P24S<br>CMS | Safety function STO input terminals [ST1] and [ST2] have been added as dedicated terminals. In addition, [P24S] and [CMS] have been added as dedicated power supply for functional safety.<br>For details, refer to "14.1 Using the Safety Function STO (Safe Torque Off)". |
| EDM output signal | 11 | By turning ON the EDM function selector switch on the control board, output terminal [11] is switched to the EDM output terminal. | 11 | In addition to the content shown on the left, in case EDM function selector switch is ON, the 3rd and 4th of "Input terminal monitor [d005]" switch to the status monitor of [ST1] and [ST2]. (Terminal functions assigned to input terminals 3 and 4 are not changed.) |
| B phase pulse input | 7/[EB] | Max. input frequency is 1.8 kHz.<br>Internal resistance is 4.7kΩ. | 7 | Max. input frequency is 32 kHz.<br>Internal resistance is 3.0kΩ. |
| Logic power supply | P24 | Internal 24 VDC power supply terminal for digital input. | P24 | In addition to the content shown on the left, by inputting an external 24 VDC power supply to this terminal and the [L] terminal, only the control board can be started. |

## Details of comparison of control circuit terminal block

| Item | | WJ200 | | WJ-C1 | | Change point (function/electrical characteristics, etc.) |
|---|---|---|---|---|---|---|
| | | Terminal symbol | Terminal name | Terminal symbol | Terminal name | |
| **Analog input/output** | | | | | | |
| | Power supply | L | Common for input signal | L | Common for input signal | Equivalent |
| | | H | Power supply for frequency setting | H | Power supply for frequency setting | |
| | Frequency setting (Analog input) | O | Analog input (Voltage input) | Ai1 | Analog input 1 (Voltage input) | Only the terminal symbol is changed. |
| | | OI | Analog input (Current input) | Ai2 | Analog input 2 (Current input) | |
| | Thermistor input | 5 [PTC] | External thermistor input | 5 [PTC] | External thermistor input | Equivalent |
| | Monitor output | AM | Analog output | Ao1 | Analog output | Only the terminal symbol is changed. |
| **Digital input** | | | | | | |
| | Power supply | L | Common for input signal | L | Common for input signal | Equivalent |
| | | P24 | Power supply terminal for input signal | P24 | Power supply terminal for input signal | Specification of the internal 24 VDC power supply is identical. In WJ-C1, by inputting external 24 VDC power supply to this terminal, only the control board can be operated and read/write of parameters, communication etc. are possible. |
| | | PLC | Power supply terminal for input terminal | PLC | Sink/Source logic switching terminal for input signal | Only the terminal name is changed. |
| | Digital input | 7<br>6 | Intelligent input | 7<br>6 | Intelligent input | Internal resistance is changed.<br>WJ200 : 4.7 kΩ<br>WJ-C1 : 3.0 kΩ |
| | | 5<br>4<br>3<br>2<br>1 | | 5<br>4<br>3<br>2<br>1 | | Equivalent |
| | Pulse input | EA | Pulse input A | 8 [PLA] | Pulse input A | Only the terminal symbol is changed.<br>In WJ-C1 User's Guide, this is called [PLA]. |
| | | 7 [EB] | Pulse input B | 7 [PLB] | Pulse input B | Assignment function name of intelligent input terminal is changed.<br>The maximum input frequency and Internal resistance is changed.<br>WJ200: 1.8 kHz(4.7 kΩ)<br>WJ-C1: 32 kHz(3.0 kΩ) |

| Item | WJ200 | | WJ-C1 | | Change point (function/electrical characteristics, etc.) |
|---|---|---|---|---|---|
| | Terminal Symbol | Terminal name | Terminal symbol | Terminal name | |
| Digital output | | | | | |
| Open collector output | 11<br>12 | Intelligent output | 11<br>12 | Intelligent output | Equivalent |
| | CM2 | Common for intelligent output | CM2 | Common for intelligent output | |
| Relay output | AL0<br>AL1<br>AL2 | Intelligent relay output | AL0<br>AL1<br>AL2 | Intelligent relay output | |
| Pulse output | E0 | Digital pulse output | Ao2 | Digital pulse output | Only the terminal symbol is changed. |
| Serial Communication | SP<br>SN | Modbus communication terminal | SP<br>SN | Modbus communication terminal | The terminating resistance value is changed.<br>WJ200: 200 Ω<br>WJ-C1: 120 Ω |
| Functional safety | GS1<br>GS2 | Safety input | - | - | When using the safety function, use the dedicated [ST1]/[ST2] terminals.<br>In WJ-C1, there is no safety function selector switch. |
| | - | - | ST1<br>ST2 | STO input 1<br>STO input 2 | Safety function STO inputs.<br>To handle WJ-C1 as a functional safety certified product, refer to the separate volume, "WJ Series C1 Safety Function Guide (NT3612*X)".<br>ELECTRICAL CHARACTERISTICS<br>[ST1]/[ST2]-[CMS] Voltage:<br>ON: Min. 15 VDC<br>OFF : Max. 5 VDC<br>Maximum allowable voltage: 27 VDC<br>Load current: 5.8 mA (27 VDC)<br>Internal resistance: 4.7 kΩ |
| | - | - | P24S | 24 VDC output | 24 VDC power supply dedicated to [ST1]/[ST2] terminals.<br>Max. output current: 100 mA |
| | - | - | CMS | Common for 24 VDC output | Common terminal for [P24S]. |
| | 11<br>[EDM] | STO confirmation output | 11<br>[EDM] | STO confirmation output | Equivalent<br>However, WJ-C1 can comply with functional safety standards even if [EDM] is not used. |

## A.1.4 Data Copy from WJ200 to WJ-C1

A

- When copying parameter settings from WJ200 to WJ-C1, the following methods are available:
  (a) Copy data using the optional remote operator WOP.
  (b) Copy data using the inverter configuration software ProDriveNext.
  (c) Set manually referring to the parameter list of WJ200 and WJ-C1.

!

- WJ-C1 is designed to be upwardly compatible with WJ200 Ver3.2. If WJ200 version to be copied is older than Ver 3.2, additional parameters associated with the upgrade are not copied.
  For detailed information such as additional parameters, refer to the "WJ200 Series Instruction Manual (NT325DX or later)" and set them individually for WJ-C1 as required.
- After copying the data, be sure to check that there is no problem with the operation of the system.
- The setting range of some parameters of WJ-C1 have been extended for functional enhancements. It is not possible to copy data from WJ-C1 to WJ200 when the settings are specific to WJ-C1.

### ■ Copying parameter/EzSQ data by the remote operator WOP

- The remote operator WOP can read/write setting data and EzSQ program in batch mode in addition to normal monitor displays and data settings.
- Refer to "Remote Operator WOP Instruction Manual (NT214*X)" for more information.

### ■ Copying parameter data by ProDriveNext

- In the inverter configuration software ProDriveNext, the setting data of the inverter and EzSQ program can be uploaded from an inverter as a file in CSV format that can be downloaded to the inverter.
- Refer to "Inverter Configuration Software ProDriveNext User's Guide (NT8001*X)" for more information.

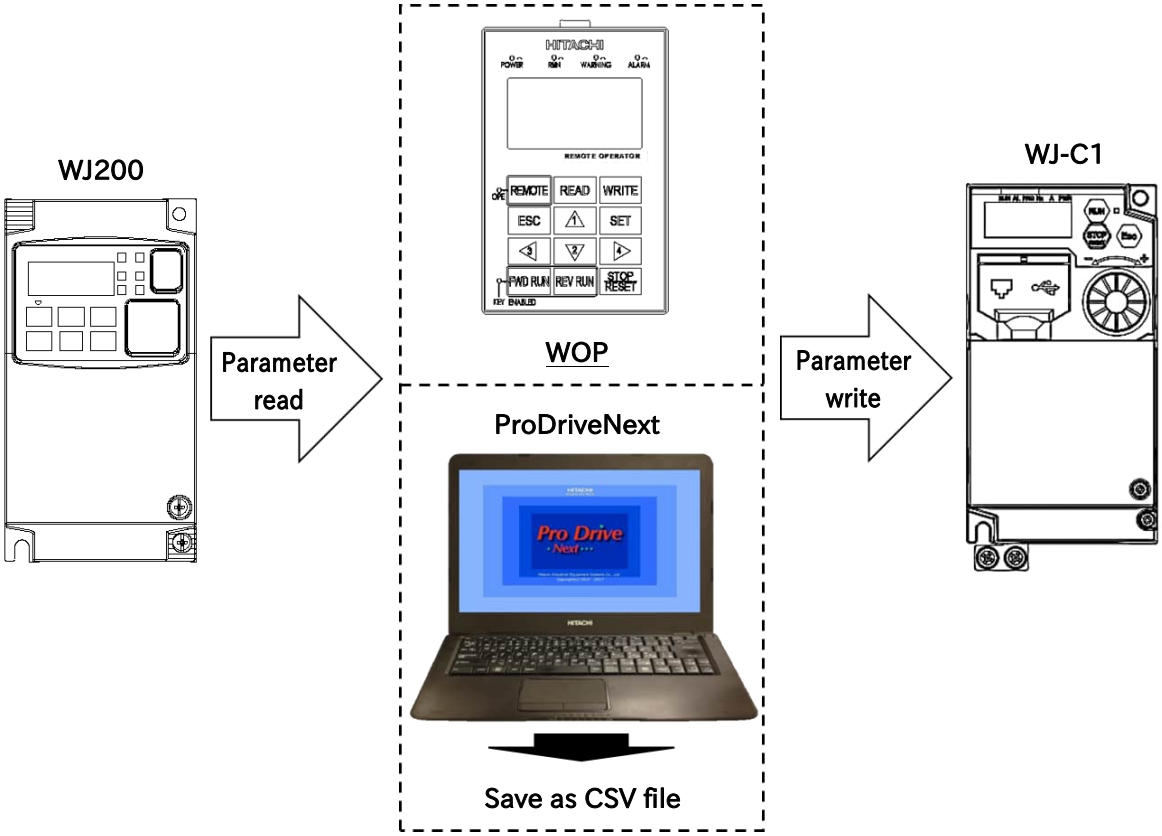

## A.1.5 Comparison of Functions of WJ200 and WJ-C1

A

- WJ200 and WJ-C1 have the same parameter system, but there are functions that have changed in operation.
  For details, refer to the table below and the corresponding part in the "Page" column.

<table>
<tr><th>No.</th><th>Function</th><th>Change from WJ200 to WJ-C1</th><th>Page</th></tr>
<tr><td>1</td><td>Free-V/f frequency</td><td>WJ-C1 cannot start running if "Free-V/f frequency 7 [b112]" is set to less than 30 Hz.
<table>
<tr><th>Code</th><th>WJ200</th><th>WJ-C1</th></tr>
<tr><td>[b112]</td><td>Free-V/f frequency 6 to 400 (Hz)</td><td>Free-V/f frequency 6 to 590 (Hz)<br>* Cannot start running if the setting value is less than 30 Hz.</td></tr>
</table></td><td>9-5-4</td></tr>
<tr><td>2</td><td>Control with a speed sensor</td><td>Speed detection method at inputting single-phase pulse ([EA]/PLA)) has been changed as follows.
<table>
<tr><th>WJ200</th><th>WJ-C1</th></tr>
<tr><td> 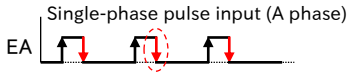

EA (A phase): 32 kHz max.<br>EB (B phase): 1.8 kHz max.</td><td> 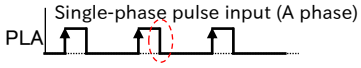

PLA (A phase): 32 kHz max.<br>PLB (B phase): 32 kHz max.</td></tr>
</table></td><td>9-5-8</td></tr>
<tr><td>3</td><td>Positioning restart function</td><td>The operation of the positioning for the positioning restart function has been changed as follows.
<table>
<tr><th>WJ200</th><th>WJ-C1</th></tr>
<tr><td> 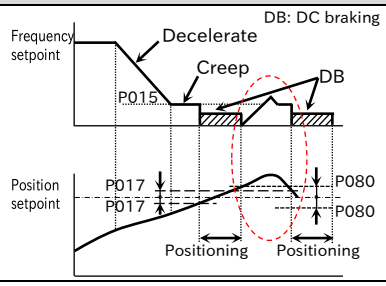
</td><td> 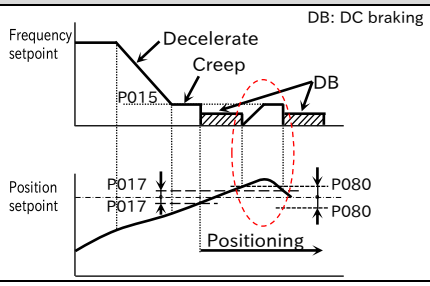
</td></tr>
</table></td><td>9-14-7</td></tr>
<tr><td>4</td><td>DC braking</td><td>Automatic carrier frequency reduction by DC braking force has been changed as follows.
<table>
<tr><th>WJ200</th><th>WJ-C1</th></tr>
<tr><td> 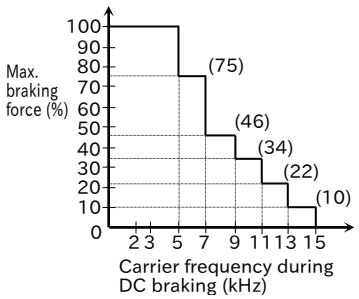
</td><td> 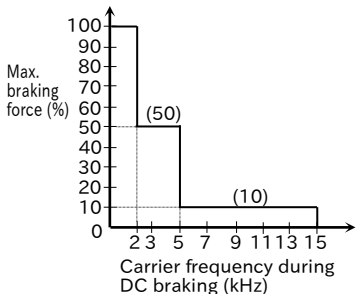
</td></tr>
</table></td><td>9-7-12</td></tr>
<tr><td>5</td><td>Jogging</td><td>When [JG] is ON while [FW] is ON, decelerate to the jogging frequency as follows.
<table>
<tr><th>WJ200</th><th>WJ-C1</th></tr>
<tr><td> 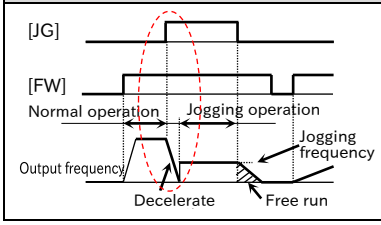
</td><td> 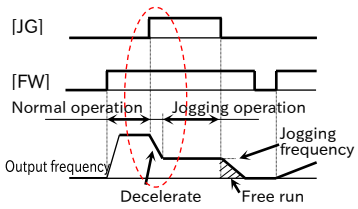
</td></tr>
</table></td><td>9-2-10</td></tr>
<tr><td>6</td><td>Soft-Lock</td><td>A selection of the "Soft-Lock selection [b031]" becomes invalid as follows.
<table>
<tr><th>Code</th><th>WJ200</th><th>WJ-C1</th></tr>
<tr><td>[b031]</td><td>10: High level access including b031</td><td>10: (Invalid)</td></tr>
</table></td><td>7-2-5</td></tr>
</table>

<table>
<tr><th>No.</th><th>Function</th><th>Change from WJ200 to WJ-C1</th><th>Page</th></tr>
<tr><td>7</td><td>Display restriction</td><td>A selection of the "Display restriction selection [b037]" becomes invalid and the initial value has been changed as follows.
<table>
<tr><th>Code</th><th>WJ200</th><th>WJ-C1</th></tr>
<tr><td>[b037]</td><td>00: Full display<br>04: Basic display (initial value)</td><td>00: Full display (initial value)<br>04: (Invalid)</td></tr>
</table></td><td>7-2-1</td></tr>
<tr><td>8</td><td>Initialization</td><td>Parameters that are not initialized at the initialization are different between WJ200 series and WJ-C1. Parameters checked with ✓ in the table below are not initialized.
<table>
<tr><th colspan="4">Non-initialized parameter</th></tr>
<tr><th>Code</th><th>Name</th><th>WJ200</th><th>WJ-C1</th></tr>
<tr><td>[d016]</td><td>Accumulated RUN time monitor</td><td>✓</td><td>✓</td></tr>
<tr><td>[d017]</td><td>Accumulated power-on time monitor</td><td>✓</td><td>✓</td></tr>
<tr><td>[b049]</td><td>Load type selection</td><td>✓</td><td>-</td></tr>
<tr><td>[b085]</td><td>Initialize data selection</td><td>✓</td><td>-</td></tr>
<tr><td>[b094]</td><td>Initialize target selection</td><td>✓*</td><td>✓*</td></tr>
<tr><td>[C081]</td><td>[Ai1] Input gain adjustment</td><td>✓</td><td>-</td></tr>
<tr><td>[C082]</td><td>[Ai2] Input gain adjustment</td><td>✓</td><td>-</td></tr>
<tr><td>[C085]</td><td>Thermistor gain adjustment</td><td>✓</td><td>-</td></tr>
<tr><td>[P082]</td><td>Current position at power off</td><td>✓</td><td>-</td></tr>
</table>
* This parameter is initialized to "All parameters (00)" when switching the inverter mode.</td><td>7-2-3</td></tr>
<tr><td>9</td><td>Cooling fan control method</td><td>The operation when the "Cooling fan control method selection [b037]" is "While inverter operates (01)" or "Depends on temperature (02)" has been changed as follows.
<table>
<tr><th>Code</th><th>Data</th><th>WJ200</th><th>WJ-C1</th></tr>
<tr><td rowspan="3">[b092]</td><td>Always (00)</td><td>Always ON</td><td>Always ON</td></tr>
<tr><td>While inverter operates (01)</td><td>ON: At power-on or during running<br>OFF: 5 minutes after stop</td><td>ON: During running<br>OFF: 3 minutes after stop<br>* Cooling fan is not turned off if temperature of the cooling fin is not lower than the defined value.</td></tr>
<tr><td>Depends on temperature (02)</td><td>ON: Over the defined temperature<br>OFF: Under the defined temperature</td><td>ON: Over the defined temperature<br>OFF: Under the defined temperature for 3 minutes</td></tr>
</table></td><td>9-10-6</td></tr>
<tr><td>10</td><td>Ground fault detection</td><td>WJ-C1 can select enable/disable of the "Ground fault [E14.*]" by the "Detect ground fault selection [b098]". The initial value of [b098] is "Disable (00)".
<table>
<tr><th>Code</th><th>WJ200</th><th>WJ-C1</th></tr>
<tr><td>[b098]</td><td>Always enable<br>(No parameter)</td><td>00: Disable (initial value)<br>01: Enable</td></tr>
</table></td><td>15-2-3</td></tr>
<tr><td>11</td><td>Torque limit</td><td>Following parameters that cannot be changed during running on WJ200 series can change always including during running on WJ-C1.<br>・"Torque limit 1 (Forward drive) [b041]"<br>・"Torque limit 2 (Reverse regenerative) [b042]"<br>・"Torque limit 3 (Reverse drive) [b043]"<br>・"Torque limit 4 (Forward regenerative) [b044]"</td><td>9-6-2</td></tr>
<tr><td>12</td><td>Reset mode</td><td>On WJ200 series, when "Reset mode selection [C102]" is any of (00) to (02), reset to the initial state of inverter (system reset) is performed at "Reset [RS]" operation. When [C102] is (03), only the trip is released and the system reset is not performed.<br>On WJ-C1, for all settings of [C102] ((00) to (03)), the system reset is not performed.
<table>
<tr><th>Code</th><th>WJ200</th><th>WJ-C1</th></tr>
<tr><td>[C102]</td><td>00: Reset at turn-ON<br>01: Reset at turn-OFF<br>02: Only enable in trip status (Trip release at turn-ON)<br>03: Only trip release</td><td>00: Reset at turn-ON<br>01: Reset at turn-OFF<br>02: Only enable in trip status (Trip release at turn-ON)<br>03: Only enable in trip status (Trip release at turn-ON, clear only trip memory)</td></tr>
</table></td><td>9-1-9</td></tr>
<tr><td>13</td><td>Analog current input error</td><td>"Analog current input error [E26.*]", which occurs when an excessive current flows through the analog current input terminal [Ai2], is added on WJ-C1.<br>When this error occurred, power-off the inverter and check the wirings.</td><td>15-2-4</td></tr>
</table>

<table>
<tr><th>No.</th><th>Function</th><th>Change from WJ200 to WJ-C1</th><th>Page</th></tr>
<tr><td>14</td><td>Major failure</td><td>Errors that are judged as "Major failure [MJA]" are different between WJ200 series and WJ-C1. Errors checked with ✓ in the table below are judged as a serious error and [MJA] is output.
<table>
<tr><th>No.</th><th>Error code</th><th>Name</th><th>WJ200</th><th>WJ-C1</th></tr>
<tr><td>1</td><td>E08.*</td><td>Memory error</td><td>✓</td><td>✓</td></tr>
<tr><td>2</td><td>E10.*</td><td>Current detector error</td><td>✓</td><td></td></tr>
<tr><td>3</td><td>E11.*</td><td>CPU error</td><td>✓</td><td>✓</td></tr>
<tr><td>4</td><td>E14.*</td><td>Ground fault</td><td>✓</td><td>✓</td></tr>
<tr><td>5</td><td>E22.*</td><td>CPU communication error</td><td>✓</td><td></td></tr>
<tr><td>6</td><td>E25.*</td><td>Main circuit error</td><td>✓</td><td></td></tr>
<tr><td>7</td><td>E30.*</td><td>Driver error</td><td>-</td><td>✓</td></tr>
</table></td><td>9-11-2</td></tr>
<tr><td>15</td><td>Frequency matching restart</td><td>The behavior at the restart with frequency matching is different between WJ200 series and WJ-C1. As shown in the figure below, when restart with frequency matching is selected, WJ-C1 restarts with active frequency matching from the shut-off frequency.
<table>
<tr><th>WJ200</th><th>WJ-C1</th></tr>
<tr><td> 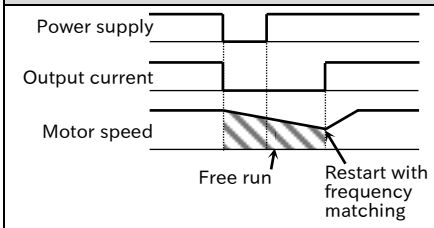

Restart by detecting the motor speed.</td><td> 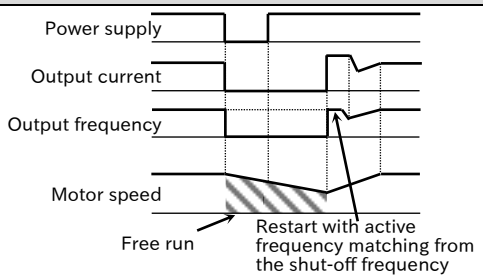

Restart with active frequency matching from the shut-off frequency without detecting the motor speed.</td></tr>
</table>
* Related parameter (b001, b008, b088, C103)</td><td>9-7-3</td></tr>
<tr><td>16</td><td>Overload restriction</td><td>The behavior when "Overload restriction mode selection ([b021]/[b221]/[b024])" is "Enable during accel. and constant speed (accel. during regeneration)" is different between WJ200 series and WJ-C1. WJ200 increases the output frequency during regeneration also at deceleration, but WJ-C1 does not increase the output frequency during regeneration at deceleration.
<table>
<tr><th>WJ200</th><th>WJ-C1</th></tr>
<tr><td> 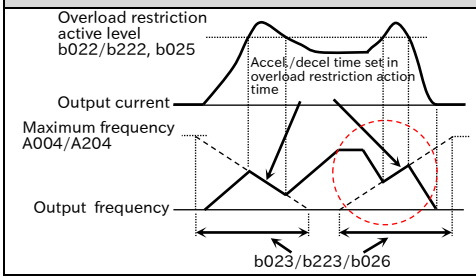
</td><td> 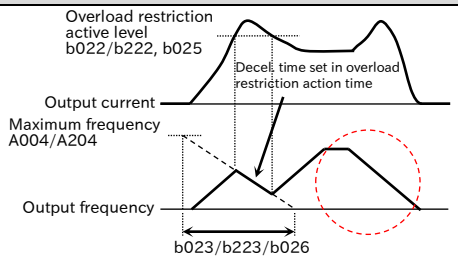
</td></tr>
</table></td><td>9-9-1</td></tr>
</table>

## A.1.6 WJ200 High Frequency Compatible Mode

- In the WJ200 high frequency compatible mode, regardless of the carrier frequency [b083] setting, the output switching frequency may increase to equivalent to about 15kHz of the carrier frequency depending on the operating conditions. Refer to "17.3 Current Derating" and perform current derating at 15kHz of the carrier frequency of normal duty rating.
- In the WJ200 high frequency compatible mode, only the manual torque boost is available as the torque boost function. Do not use the automatic torque boost.
- "Acceleration curve selection [A097]", "Deceleration curve selection [A098]" operates at "Linear (00)".
- "Automatic carrier reduction selection [b089]" is "Disable (00)".
- For details about parameters in the WJ200 high frequency compatible mode, please refer to the following section.

### (1) Hidden parameters

•In the WJ200 high frequency compatible mode, some parameters are not displayed.

| Code | Name |
|---|---|
| d009 | Torque reference monitor |
| d010 | Torque bias monitor |
| d012 | Output torque monitor |
| A097 | Acceleration curve selection*1 |
| A098 | Deceleration curve selection*1 |
| A131 | Acceleration curve constant |
| A132 | Deceleration curve constant |
| A150 | EL-S-curve ratio at start of acceleration |
| A151 | EL-S-curve ratio at end of acceleration |
| A152 | EL-S-curve ratio at start of deceleration |
| A153 | EL-S-curve ratio at end of deceleration |
| b040 | Torque limit selection |
| b041 | Torque limit 1 (Forward drive) |
| b042 | Torque limit 2 (Reverse regenerative) |
| b043 | Torque limit 3 (Reverse drive) |
| b044 | Torque limit 4 (Forward regenerative) |
| b045 | Torque limit LADSTOP selection |
| b046 | Direction reversal protection selection |
| b049 | Load type selection*2 |
| b089 | Automatic carrier reduction selection*3 |
| C054 | Over/ Under-torque selection |
| C055 | Over/ Under-torque level (Forward drive) |
| C056 | Over/ Under-torque level (Reverse regenerative) |
| C057 | Over/ Under-torque level (Reverse drive) |
| C058 | Over/ Under-torque level (Forward regenerative) |
| C059 | Over/ Under-torque output signal mode selection |
| H001 | Auto-tuning selection*3 |
| H002 | Async. Motor constant selection, 1st-motor |
| H202 | Async. Motor constant selection, 2nd-motor |
| H005 | Async. Motor speed response, 1st-motor |
| H205 | Async. Motor speed response, 2nd-motor |
| H020 | Async. Motor constant R1, 1st-motor |
| H220 | Async. Motor constant R1, 2nd-motor |
| H021 | Async. Motor constant R2, 1st-motor |
| H221 | Async. Motor constant R2, 2nd-motor |
| H022 | Async. Motor constant L, 1st-motor |

*1. [A097], [A098] operates at "Linear (00)".
*2. [b049] operates at "Normal duty (00)".
*3. [b089], [H001] is "Disable (00)".

| Code | Name |
|---|---|
| H222 | Async. Motor constant L, 2nd-motor |
| H023 | Async. Motor constant I0, 1st-motor |
| H223 | Async. Motor constant I0, 2nd-motor |
| H024 | Async. Motor constant J, 1st-motor |
| H224 | Async. Motor constant J, 2nd-motor |
| H030 | Async. Motor constant R1, 1st-motor (Auto-tuning data) |
| H230 | Async. Motor constant R1, 2nd-motor (Auto-tuning data) |
| H031 | Async. Motor constant R2, 1st-motor (Auto-tuning data) |
| H231 | Async. Motor constant R2, 2nd-motor (Auto-tuning data) |
| H032 | Async. Motor constant L, 1st-motor (Auto-tuning data) |
| H232 | Async. Motor constant L, 2nd-motor (Auto-tuning data) |
| H033 | Async. Motor constant I0, 1st-motor (Auto-tuning data) |
| H233 | Async. Motor constant I0, 2nd-motor (Auto-tuning data) |
| H034 | Async. Motor constant J, 1st-motor (Auto-tuning data) |
| H234 | Async. Motor constant J, 2nd-motor (Auto-tuning data) |
| H102 to H134 | These parameters are SM/PMM related functions. |
| P033 | Torque reference input source selection |
| P034 | Torque reference |
| P036 | Torque bias input source selection |
| P037 | Torque bias value |
| P038 | Torque bias polarity selection |
| P039 | Speed limit at torque control (Forward rotation) |
| P040 | Speed limit at torque control (Reverse rotation) |
| P041 | Switching time of speed control to torque control |

## (2) Data range of parameters

- In the WJ200 high frequency compatible mode, the data range of some parameters differs from that in "18.2 List of Parameters and Modbus Holding Registers".

| Code | Name | Data range |
|---|---|---|
| d001 | Output frequency monitor | 0.0 to 590.0 (Hz) |
| d007 | Output frequency scale conversion monitor | 0.0 to 590.0 (0.0 to 58994.1 depending on [b086] conversion) |
| d008 | Detect speed monitor*1 | -590.0 to +590.0 (Hz) |
| d081 | Trip monitor 1 | Output frequency at Trip (Hz) 0.0 to 590.0 (Hz) |
| d082 | Trip monitor 2 | Output frequency at Trip (Hz) 0.0 to 590.0 (Hz) |
| d083 | Trip monitor 3 | Output frequency at Trip (Hz) 0.0 to 590.0 (Hz) |
| d084 | Trip monitor 4 | Output frequency at Trip (Hz) 0.0 to 590.0 (Hz) |
| d085 | Trip monitor 5 | Output frequency at Trip (Hz) 0.0 to 590.0 (Hz) |
| d086 | Trip monitor 6 | Output frequency at Trip (Hz) 0.0 to 590.0 (Hz) |
| A038 | Jogging frequency | Minimum frequency to 10.000 (Hz) |
| A044 | Control mode selection, 1st-motor | 00: [V/f] Constant torque characteristics (IM)<br>01: [V/f] Reducing torque characteristics (IM)<br>02: [V/f] Free V/f (IM) |
| A244 | Control mode selection, 2nd-motor | |
| A059 | Carrier frequency during DC braking*2 | 2.0 to 10.0 (kHz) |
| A064 | Jump frequency width 1 | 0.00 to 100.00 (Hz) |
| A066 | Jump frequency width 2 | 0.00 to 100.00 (Hz) |
| A068 | Jump frequency width 3 | 0.00 to 100.00 (Hz) |
| b038 | Initial display selection | 000: Parameter that SET-key was pressed last<br>001 to 008: d001 to d008<br>013 to 060: d013 to d060<br>201: F001<br>202: Monitor B display of WOP |
| b054 | Instantaneous power failure non-stop function, start frequency decrement | 0.00 to 100.00 (Hz) |
| b082 | Minimum frequency | 0.01 to 100.00 (Hz) |
| b083 | Carrier frequency | 2.0 to 10.0 (kHz)<br>* With derating. |
| b150 | Display while ext. operator connected | 001 to 008, 013 to 060 (compatible with d001 to d008, d013 to d060) |
| b160 | Dual monitor parameter 1 | 001 to 008, 013 to 030 (compatible with d001 to d008, d013 to d030) |

| Code | Name | Data range |
|---|---|---|
| b161 | Dual monitor parameter 2 | 001 to 008, 013 to 030 (compatible with d001 to d008, d013 to d030) |
| C001 | Input terminal [1] function | See "18.2.6 List of Intelligent Input Terminal Functions" (except [TL], [TRQ1], [TRQ2], [ATR]) |
| C002 | Input terminal [2] function | |
| C003 | Input terminal [3] function | |
| C004 | Input terminal [4] function | |
| C005 | Input terminal [5] function | |
| C006 | Input terminal [6] function | |
| C007 | Input terminal [7] function | |
| C021 | Output terminal [11] function | See "18.2.7 List of Intelligent Output Terminal Functions" (except [OTQ], [TRQ]) |
| C022 | Output terminal [12] function | |
| C026 | Output terminal [AL] function | |
| C027 | [Ao2] Output monitor selection (PWM/ Pulse output) | 00: Output frequency<br>01: Output current<br>03: Digital output frequency<br>04: Output voltage<br>05: Input power<br>06: Electronic thermal load ratio<br>07: LAD frequency<br>08: Digital current monitor<br>10: Cooling fin temperature<br>12: EzSQ general-purpose analog output YA0<br>15: Pulse input monitor<br>16: Option |
| C028 | [Ao1] Output monitor selection (Analog output monitor) | 00: Output frequency<br>01: Output current<br>04: Output voltage<br>05: Input power<br>06: Electronic thermal load ratio<br>07: LAD frequency<br>10: Cooling fin temperature<br>13: EzSQ General-purpose analog output YA1<br>16: Option |
| P015 | Creep speed | Minimum frequency to 100.0(Hz) |
| P070 | Low-speed homing speed | 0.00 to 100.00 (Hz) |

*1. Depending on the actual detected value, the displayed value may exceed this range.

*2. This parameter is a dummy parameter. User setting is disabled. Carrier frequency in DC braking is shared with "Carrier frequency [b083]". In addition, if data is written within the data range by Modbus communication, no error will occur.

## (3) Initial value of parameters

- In the WJ200 high frequency compatible mode, the initial value of some parameters differs from that in "18.2 List of Parameters and Modbus Holding Registers".

| Code | Name | Initial Value |
|---|---|---|
| F002 | Acceleration time 1 setting or monitor, 1st-motor | 30.00 (s) |
| F202 | Acceleration time 1 setting or monitor, 2nd-motor | 30.00 (s) |
| F003 | Deceleration time 1 setting or monitor, 1st-motor | 30.00 (s) |
| F203 | Deceleration time 1 setting or monitor, 2nd-motor | 30.00 (s) |
| A003 | Base frequency, 1st-motor | 590.0 (Hz) |
| A203 | Base frequency, 2nd-motor | 590.0 (Hz) |
| A004 | Maximum frequency, 1st-motor | 590.0 (Hz) |

| Code | Name | Initial Value |
|---|---|---|
| A204 | Maximum frequency, 2nd-motor | 590.0 (Hz) |
| A092 | Acceleration time 2, 1st-motor | 15.00 (s) |
| A292 | Acceleration time 2, 2nd-motor | 15.00 (s) |
| A093 | Deceleration time 2, 1st-motor | 15.00 (s) |
| A293 | Deceleration time 2, 2nd-motor | 15.00 (s) |
| b083 | Carrier frequency | 5.0 (kHz) |

## (4) Data range of Modbus communication

- In the WJ200 high frequency compatible mode, Modbus communication data range of some parameters differs from that in "18.2 List of Parameters and Modbus Holding Registers".

| Code | Name | Data range |
|---|---|---|
| A038 | Jogging frequency | Minimum frequency to 10000 |
| A044 | Control mode selection, 1st-motor | 0 to 2 |
| A244 | Control mode selection, 2nd-motor | 0 to 2 |
| A059 | Carrier frequency during DC braking*1 | 20 to 100 |
| A064 | Jump frequency width 1 | 0 to 10000 |
| A066 | Jump frequency width 2 | 0 to 10000 |
| A068 | Jump frequency width 3 | 0 to 10000 |
| b038 | Initial display selection | 000 to 008, 013 to 202 |
| b054 | Instantaneous power failure non-stop function, start frequency decrement | 0 to 10000 |
| b082 | Minimum frequency | 1 to 10000 |
| b083 | Carrier frequency | 20 to 100 |
| b150 | Display while ext. operator connected | 1 to 8, 13 to 60h (BCD) |
| b160 | Dual monitor parameter 1 | 1 to 8, 13 to 30h (BCD) |

| Code | Name | Data range |
|---|---|---|
| b161 | Dual monitor parameter 2 | 1 to 8, 13 to 30h (BCD) |
| C001 | Input terminal [1] function | 0 to 91 / 255(no) (except 40 to 42, 52) |
| C002 | Input terminal [2] function | |
| C003 | Input terminal [3] function | |
| C004 | Input terminal [4] function | |
| C005 | Input terminal [5] function | |
| C006 | Input terminal [6] function | |
| C007 | Input terminal [7] function | |
| C021 | Output terminal [11] function | 0 to 64 / 255(no) (except 7, 10) |
| C022 | Output terminal [12] function | |
| C026 | Output terminal [AL] function | |
| C027 | [Ao2] Output monitor selection (PWM/ Pulse output) | 0, 1, 3 to 8, 10, 12, 15, 16 |
| C028 | [Ao1] Output monitor selection (Analog output monitor) | 0, 1, 4 to 7, 10, 13, 16 |
| P015 | Creep speed | Minimum frequency to 10000 |
| P070 | Low-speed homing speed | 0 to 10000 |

*1. This parameter is a dummy parameter. User setting is disabled. Carrier frequency in DC braking is shared with "Carrier frequency [b083]". In addition, if data is written within the data range by Modbus communication, no error will occur.

# A.2 Glossary

B

| Name | Description |
|---|---|
| Basic Guide | Basic instruction manual showing only the information necessary for handling the inverter. |

C

| Name | Description |
|---|---|
| CE marking | A mark that is attached when meeting the EU standards. Required for sales in Europe. |
| Charge lamp | Indicates the charging status of the inverter to the main circuit DC voltage circuit. Even if the input power is shut off, the voltage remains as long as it is lit. |
| Control power supply | Power supply required to set parameters by the keypad, control PWM output gate circuit, etc. |

D

| Name | Description |
|---|---|
| Dynamic braking resistor | Resistor for power consumption connected to regenerative braking unit or built-in braking resistor operation circuit. Selection is required depending on the power consumption and operating time. |

E

| Name | Description |
|---|---|
| EMC | Electromagnetic compatibility<br>A property that prevents other devices from malfunctioning due to noise, and a property that prevents malfunction due to noise. |

F

| Name | Description |
|---|---|
| Frequency setting device | A setting device with a built-in variable resistor.<br>Connect to the analog input terminals. |

H

| Name | Description |
|---|---|
| Harmonic (noise) | Sine wave (distorted wave) current with a frequency that is an integral multiple of the commercial power supply (sine wave) generated by the input circuit of the inverter. |
| Harmonic suppression unit | The input current waveform is made sinusoidal to reduce and suppress the harmonics generated by the inverter. In addition, regenerative power can be returned to the power supply. |
| High frequency noise | Noise generated by voltage switching performed during power conversion of inverters, etc. There are conducted noise conducted through electric wires, radiation noise transmitted through the air, and induction noise induced in adjacent electric wires. |

I

| Name | Description |
|---|---|
| I/O | Input/Output |
| IGBT | Insulated gate bipolar transistor<br>One of the switching elements of an inverter. |
| IM | Induction motor. |
| Intelligent input terminal | A multifunction digital input terminal. The function can be changed in the setting. |
| Intelligent output terminal | A multifunction contact output terminal. The function can be changed in the setting. |
| Inverter model | The model written on the specification label of the inverter. |

K

| Name | Description |
|---|---|
| Keypad | The operation part installed on the surface for operating the inverter. |

L

| Name | Description |
|---|---|
| LAD | Lead to acceleration and deceleration<br>Accelerate and decelerate the motor. |
| LD rating | Light duty: One of the load ratings that indicates the rated current and overload current rating. It can drive motors with a higher rated current than the ND rating, but the overload current rating and temperature rating are relatively low. Can be used with light loads. |

M

| Name | Description |
|---|---|
| Main power supply | Supplies power to R,S,T terminals using the power supply required for inverter driving. |
| MFG No. | Manufacturing No.<br>The serial number. |

N

| Name | Description |
|---|---|
| ND rating | Normal duty: One of the load ratings that indicates the rated current and overload current rating. Generally used when load conditions are severe. |

P

| Name | Description |
|---|---|
| Phase loss | The unstable state of input/output due to some power wiring being interrupted. |
| PLC | Programmable logic controller |
| PMM | Permanent Magnet synchronous Motor. |
| Power LED [PWR] | Indicates the input status of the control power supply. The main circuit power supply may remain due to the wiring even if the LED is not lit. |
| PWM | Pulse Width Modulation<br>This is the pulse output method of the inverter. |

R

| Name | Description |
|---|---|
| Regeneration | When the fan is turned by wind, or when the motor is decelerated, the power generated on the motor side is returned to the inverter. |
| Regenerative converter | Option that allows regenerative power to be returned to the power supply. Significantly suppresses the power supply harmonic current. |
| Regenerative braking unit | The regenerative power can be consumed by the braking resistor.<br>(Depending on the model, there are built-in and non-built-in braking resistor operation circuits. Select and connect an appropriate braking resistor.) |
| RTU | Remote terminal unit.<br>Here, the name of Modbus protocol. |

S

| Name | Description |
|---|---|
| Sink logic | Difference in common for input and output terminals. With sink logic, for example, when using PLC output unit, current flows from the inverter input terminal side to the output unit side when the inverter input terminal is ON. |
| SM | Synchronous Motor. PMM is one of SM. |
| Source logic | Difference in common of input and output terminals. With the source logic, for example, when using PLC output unit, current flows from the output unit side to the inverter input terminal side when the inverter input terminal is ON. |
| Specification label | A label with inverter specifications attached to the side of the product. |

U

| Name | Description |
|---|---|
| UL standards | Standards published by UL LLC. |
| User's Guide | Instruction manual showing detailed information necessary for handling the inverter. |

W

| Name | Description |
|---|---|
| WOP | Remote operator available in WJ-C1. In addition to normal operation, Read/Write function of the parameter can be used with the same functions as those of WJ200 series (Ver.2.0 or later).<br>Refer to "Remote Operator WOP Instruction Manual (NT214*X)" for more information. However, what is read by WJ-C1 cannot be written to WJ200. |

(Memo)

# A.3 Revision History

**Revision history**

| No. | Revision details | Date |
|---|---|---|
| NT361X | First edition | 2022/11 |
| NT361AX | - Added section "A.1.6 WJ200 high frequency compatible mode".<br>- Other corrections such as typographical errors. | 2025/12 |
| | | |

# A.4 Index

## Numeric


2CH ....9-3-3
2nd-motor control .... 9-7-18
2-stage Acceleration/Deceleration ....9-3-3
3-wire function ....9-1-4


## A


Accel/Decel curve ....9-3-5
Accel/Decel stop ....9-3-4
Acceleration curve constant ....9-3-5
Acceleration time ....9-3-1
Accumulated input power monitor .... 10-1-7
Accumulated power-on time monitor .... 10-3-1
Accumulated power-on time over .... 9-11-9
Accumulated RUN time monitor .... 10-3-1
Accumulated RUN time over .... 9-11-9
Active frequency matching restart ....9-7-4
ADD .... 9-2-16
AHD .... 9-2-18
Ai1, Ai2 terminal ....5-4-1
Ai1Dc, Ai2Dc ....9-11-10
AL .... 9-11-1
Alarm LED [AL] ....7-1-1
Alarm signal .... 9-11-1
Analog command holding .... 9-2-18
Analog disconnection detection ....9-11-10
Analog input filter .... 9-15-4
Analog input function .... 5-4-1, 9-2-4, 9-6-2, 9-6-5, 9-8-1
Analog input monitor .... 10-2-2
Analog output function .... 9-16-7
Analog start/end .... 9-15-4
Ao1, Ao2 terminal ....5-4-1
Arrival frequency .... 9-13-2, 9-13-3
Arrival frequency during acceleration .... 9-13-2, 9-13-3
Arrival frequency during deceleration .... 9-13-2, 9-13-3
AT ....9-2-4
ATR ....9-6-5
Automatic carrier reduction .... 9-10-2
Automatic torque boost ....9-5-6
Auto-tuning ....8-3-1
AVR function ....9-9-6


## B


Base frequency ....8-1-5
BER ....9-7-16, 9-14-13
Binary operation mode ....9-2-7
Bit operation mode ....9-2-7
BOK .... 9-7-16
Brake control .... 9-7-16
Braking resistor ....5-3-7, 9-9-8
Braking resistor control circuit ....9-9-8
BRD ....9-9-8
BRD load ration monitor .... 10-1-9
BRK ....9-7-16, 9-14-13


## C


Capacitor life warning .... 9-11-7
Carrier frequency .... 9-10-1
CF1 to CF4 ....9-2-7
Charge lamp ....3-2-4
CM2 terminal ....5-4-1
CMS terminal ....5-4-1
Commercial power supply change .... 9-7-15
Communication disconnection (Modbus) .... 11-1-1
Communication disconnection (remote operator) .... 7-2-11
Compliance to CE ....1-3-1
Compliance to UL ....1-4-1
Constant torque (electronic thermal) ....8-1-9
Constant torque (V/f control) ....9-5-1
Control circuit terminal ....5-4-1
Control mode ....9-5-1
Cooling fan control method .... 9-10-6
Cooling fan life warning .... 9-11-8
Cooling fin overheat warning .... 9-11-6
Cooling fin temperature monitor .... 10-3-2
CP1 to CP3 .... 9-14-2
Creep speed .... 9-14-2
CS .... 9-7-15
Current derating .... 17-3-1
Current monitor LED [A] ....7-1-1


## D


Data comparison display ....7-2-1
DB .... 9-7-11
DC braking .... 9-7-2, 9-7-11
DC bus voltage monitor .... 10-1-8
Deceleration curve constant ....9-3-5
Deceleration time ....9-3-1
Digital output .... 9-16-5
DISP .... 7-2-10
Display lock .... 7-2-10
Display restriction ....7-2-1
DSE .... 9-5-8, 9-5-17
Dual monitor .... 10-3-6

## E


Eco drive ....9-5-7
EDM .... 14-1-3
EDM switch .... 3-2-4, 14-1-3
Electronic thermal ....8-1-7
Electronic thermal load ratio monitor ....10-1-10
Electronic thermal warning .... 9-11-5
EL-S-curve ....9-3-5
EMC caution ....1-3-1
Encoder disconnection detection .... 9-5-17
Encoder feedback .... 9-5-8, 9-5-13, 9-14-1
Esc key ....7-1-1
EXT .... 9-10-3
External 24 VDC power supply ....5-4-1
External DC braking .... 9-7-11
External fault .... 9-10-3
External thermistor .... 9-10-7
EzCOM .... 11-4-1
EzSQ .... 12-2-1


## F


F/R ....9-1-4
FA1 .... 9-13-1
FA2 .... 9-13-2
FA3 .... 9-13-3
FA4 .... 9-13-2
FA5 .... 9-13-3
FBV ....9-8-2
FDN .... 9-2-18
F-OP .... 9-1-7, 9-2-21
Force operation .... 9-1-7, 9-2-21
Force terminal .... 9-1-7, 9-2-21
Forward rotation signal .... 9-12-2
FR .... 9-12-3
Free electronic thermal .... 8-1-10
Free run stop .... 9-7-10
Free V/f ....9-5-1
FREF ....9-2-3
Frequency add .... 9-2-17
Frequency calculation .... 9-2-16
Frequency change function through monitor display ... 10-1-1
Frequency input source ....9-2-1
Frequency jump .... 9-10-5
Frequency limit ....9-4-1
Frequency matching restart ....9-7-3
Frequency monitor LED [Hz] ....7-1-1
Frequency scale conversion .... 10-1-1
FRS .... 9-7-9, 9-7-10
FSC .... 14-1-4
F-TM .... 9-1-7, 9-2-21
Functional safety .... 14-1-1
Function-specific display ....7-2-1
FUP .... 9-2-18
FW ....9-1-3
FWR .... 9-12-2


## G


General-purpose analog input .... 12-2-3
General-purpose analog output .. 9-16-5, 9-16-7, 12-2-3
General-purpose input .... 12-2-3
General-purpose output .... 12-2-3
Ground fault detection .... 15-2-3


## H


H terminal ....5-4-1
HLD ....9-3-4
Homing function .... 9-14-1, 9-14-8


## I


Initial display ....7-2-8
Initialization ....7-2-3
Input power monitor .... 10-1-7
Input terminal monitor .... 10-2-1
Input terminal NO/NC .... 9-15-1
Input terminal response time .... 9-15-3
Input voltage ....8-1-5
Installation environment ....4-1-1
Instantaneous power failure non-stop .... 9-9-17
Instantaneous power failure/undervoltage allowed time .....9-9-9
Instantaneous power failure/undervoltage retry.....9-9-9
Intelligent input terminal .... 5-4-1, 9-15-1
Intelligent output terminal .... 5-4-1, 9-16-1
Intelligent relay output terminal .... 5-4-1, 9-16-1
Internal DC braking .... 9-7-11
Inverter mode .... 8-1-15
Inverter mode monitor .... 10-3-4
Inverter/converter test .... 16-2-4
IRDY .... 9-12-4


## J


JG .... 9-2-10
JOG dial ....7-1-1
Jogging .... 9-2-10


## K


KHC .... 10-1-7

## L

L terminal ..... 5-4-1
LAC ..... 9-3-7
LAD cancel ..... 9-3-7
LAD frequency ..... 9-16-5, 9-16-7
LD rating ..... 8-1-2
Life assessment monitor ..... 10-3-3
Life warning output ..... 16-2-5
Light duty rating ..... 8-1-2
Linear accel/decel ..... 9-3-5
LOC ..... 9-11-4
LOG1 to LOG3 ..... 9-13-5
Logic operation result ..... 9-13-5
Low current signal ..... 9-11-4

## M

Main circuit terminal ..... 5-2-1
Maintenance/inspection ..... 16-1-1
Major failure signal ..... 9-11-2
Manual torque boost ..... 9-5-5
Maximum frequency ..... 8-1-5
Megger® test ..... 16-2-3
MI1 to MI7 ..... 12-2-3
Minimum frequency ..... 9-7-1
MJA ..... 9-11-2
MO1 to MO3 ..... 12-2-3
Modbus communication ..... 11-1-1
Modbus communication error ..... 11-1-2
Modbus mapping ..... 11-3-1
Motor constant ..... 8-1-13
Motor hunting ..... 9-5-10, 9-5-12
Multi speed ..... 9-2-7
Multistage positioning ..... 9-14-1, 9-14-5

## N

ND rating ..... 8-1-2
NDc ..... 11-1-1
Negative LED [-] ..... 7-1-1
Normal duty rating ..... 8-1-2

## O

OD ..... 9-8-2
OHF ..... 9-11-6
OL ..... 9-11-3
OL2 ..... 9-11-3
OLR ..... 9-9-2
ONT ..... 9-11-9
OPO ..... 9-16-3
ORG ..... 9-14-8
ORL ..... 9-14-8
Other displays ..... 15-3-2
OTQ ..... 9-6-4
Output current monitor ..... 10-1-2
Output frequency monitor ..... 10-1-1
Output frequency scale conversion monitor ..... 10-1-1
Output terminal monitor ..... 10-2-1
Output terminal NO/NC ..... 9-16-1
Output terminal off-delay time ..... 9-16-4
Output terminal on-delay time ..... 9-16-4
Output torque monitor ..... 10-1-4
Output voltage gain ..... 8-1-5
Output voltage monitor ..... 10-1-6
Overcurrent suppression ..... 9-9-3
Overload restriction ..... 9-9-1
Overload warning notice ..... 9-11-3
Overspeed error ..... 9-5-16
Over-torque ..... 9-6-4
Overvoltage suppression ..... 9-9-4
Overvoltage/overcurrent retry ..... 9-9-14

## P

P24 terminal....5-4-1
P24S terminal....5-4-1
Password function....7-2-6
PCLR....9-14-10
Peripheral device....5-3-1
Permanent magnet motor (PMM)....8-1-15
PID....9-8-1
PID control....9-8-1
PID deviation monitor....10-4-1
PID feedback monitor....10-4-1
PID output monitor....10-4-1
PIDC....9-8-2
PLA/PLB....5-4-1, 9-5-14
PLC terminal....5-4-1
POK....9-14-2
POT....9-2-3
Power LED [PWR]....7-1-1
PRG....12-2-2
ProDriveNext....12-1-1
Program counter....10-4-1
Program LED [PRG]....7-1-1
Program No. monitor....10-4-1
PSET....9-14-10
PTC....9-10-7
Pulse input (EzSQ)....12-2-3
Pulse input (frequency reference)....9-2-13
Pulse input (positioning)....9-14-1
Pulse input monitor....10-2-2
Pulse output....9-16-5
PWM output....9-16-5

## R

Reduced torque (electronic thermal)....8-1-9
Reduced torque (V/f control)....9-5-1
Reduced voltage start....9-7-1
REF....9-1-2
Regenerative braking unit....5-3-7
Remote control function....9-2-18
Remote operator....3-2-5, 7-2-11
REN....9-4-4
Reset....9-1-9
Residual risk checklist....6-2-1
Restart after free run stop....9-7-9
Restart after power-on....9-7-8
Restart after trip reset....9-7-8
Reverse rotation restriction....9-4-3
Reverse rotation signal....9-12-2
Reverse U-curve....9-3-5
RJ45 connector....7-1-1
RNT....9-11-9
Rotation direction monitor....10-1-2
RS....9-1-9, 9-7-8
RS-485....11-1-1
RUN....9-12-1
RUN command active....9-12-3
RUN command indicator LED....7-1-1
RUN command input source....9-1-1
RUN direction restriction....9-4-2
RUN key....7-1-1
RUN-key command rotation direction....9-1-2
Running LED [RUN]....7-1-1
Running signal....9-12-1
RV....9-1-3
RVR....9-12-2

## S

Safety Instructions/risks ..... 1-1-1
Safety function STO ..... 14-1-1
S-curve ..... 9-3-5
Sensorless vector control ..... 9-5-11
SET ..... 9-7-18
SET key ..... 7-1-1
SETM ..... 9-7-18
SF1 to SF7 ..... 9-2-7
SFT ..... 7-2-5
Simple positioning ..... 9-14-1
Sink logic ..... 5-4-8
SLV ..... 9-5-11
Smoothing capacitor life curve ..... 16-2-5
Soft-Lock ..... 7-2-5
Source logic ..... 5-4-9
SP, SN terminal ..... 5-4-1
SPD ..... 9-14-12
Special display (safety function) ..... 14-1-4
Specification label ..... 3-1-2
Speed control ..... 9-6-1
Speed limit at torque control ..... 9-6-5
Speed response ..... 9-5-11
ST1, ST2 terminal ..... 5-4-1
STA ..... 9-1-4
Stabilization constant ..... 9-5-10
STO input discrepancy ..... 14-1-4
STO signal ..... 14-1-1
Stop mode ..... 9-7-10
STOP/RESET key ..... 7-1-1
STP ..... 9-1-4
Synchronous motor (SM) ..... 8-1-15

## T

Termination resistor ..... 5-4-1, 11-1-3
Termination resistor switch ..... 3-2-4, 11-1-3
THM ..... 9-11-5
TL ..... 9-6-2
Torque bias ..... 9-6-6
Torque bias monitor ..... 10-1-4
Torque boost ..... 9-5-5
Torque control ..... 9-6-1
Torque limit ..... 9-6-2
Torque limit LADSTOP ..... 9-6-2
Torque reference ..... 9-6-5
Torque reference monitor ..... 10-1-4
Trip code ..... 15-2-2
Trip count monitor ..... 10-5-1
Trip monitor ..... 10-5-1
Trouble shooting ..... 15-1-1
TRQ ..... 9-6-2
TRQ1, TRQ2 ..... 9-6-2

## U

U-curve ..... 9-3-5
UDC ..... 9-2-18
Unattended start protection ..... 9-10-4
Under-torque ..... 9-6-4
USB connector ..... 7-1-1
User monitor ..... 10-4-1
User settings display ..... 7-2-1
User-parameter ..... 7-2-1, 7-2-9
USP ..... 9-10-4
UV ..... 9-9-9

## V

VC ..... 9-5-3
VP1.7 ..... 9-5-3

## W

WAC ..... 9-11-7
WAF ..... 9-11-8
Warning display ..... 15-3-1
Warning monitor ..... 10-5-2
WCAi1, WCAi2 ..... 9-11-10
Window comparator ..... 9-11-10
Withstand voltage test ..... 16-2-3

## Z

Zero speed detection ..... 9-13-4
ZS ..... 9-13-4